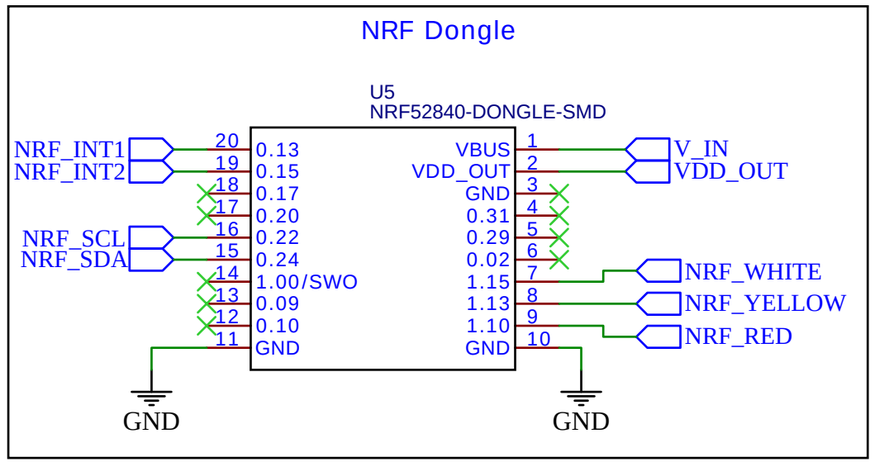

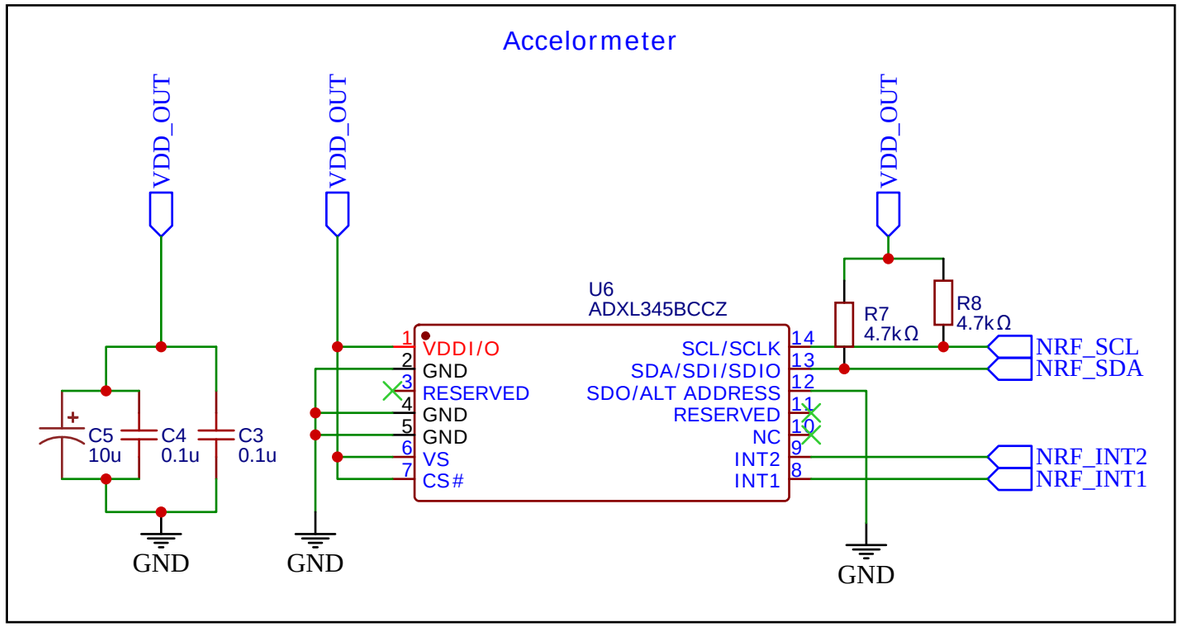

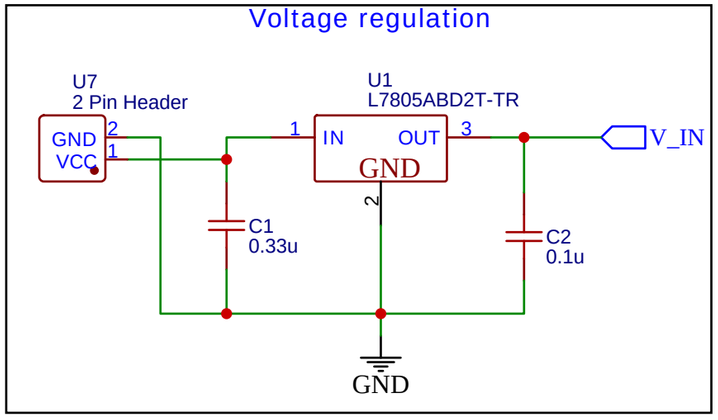

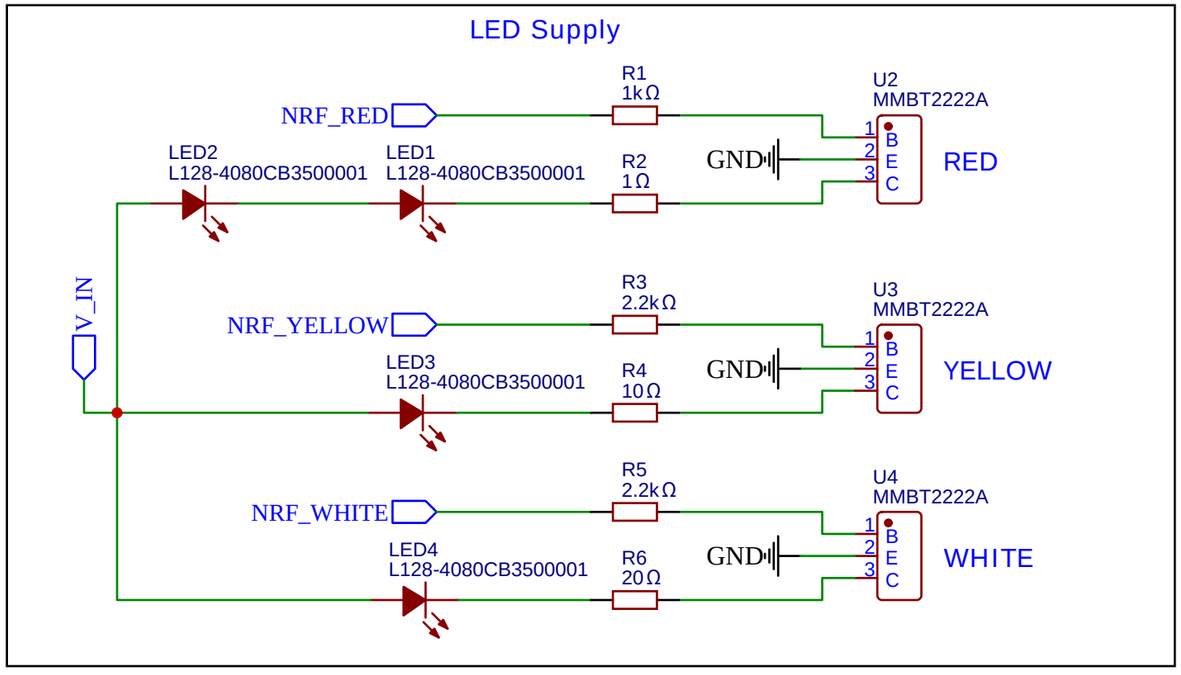

TITLE: ttf_light trailer	REV: 1.0
Company: Rehka	Sheet: 1/1
Date: 2023-10-21 Drawn By: whati001	