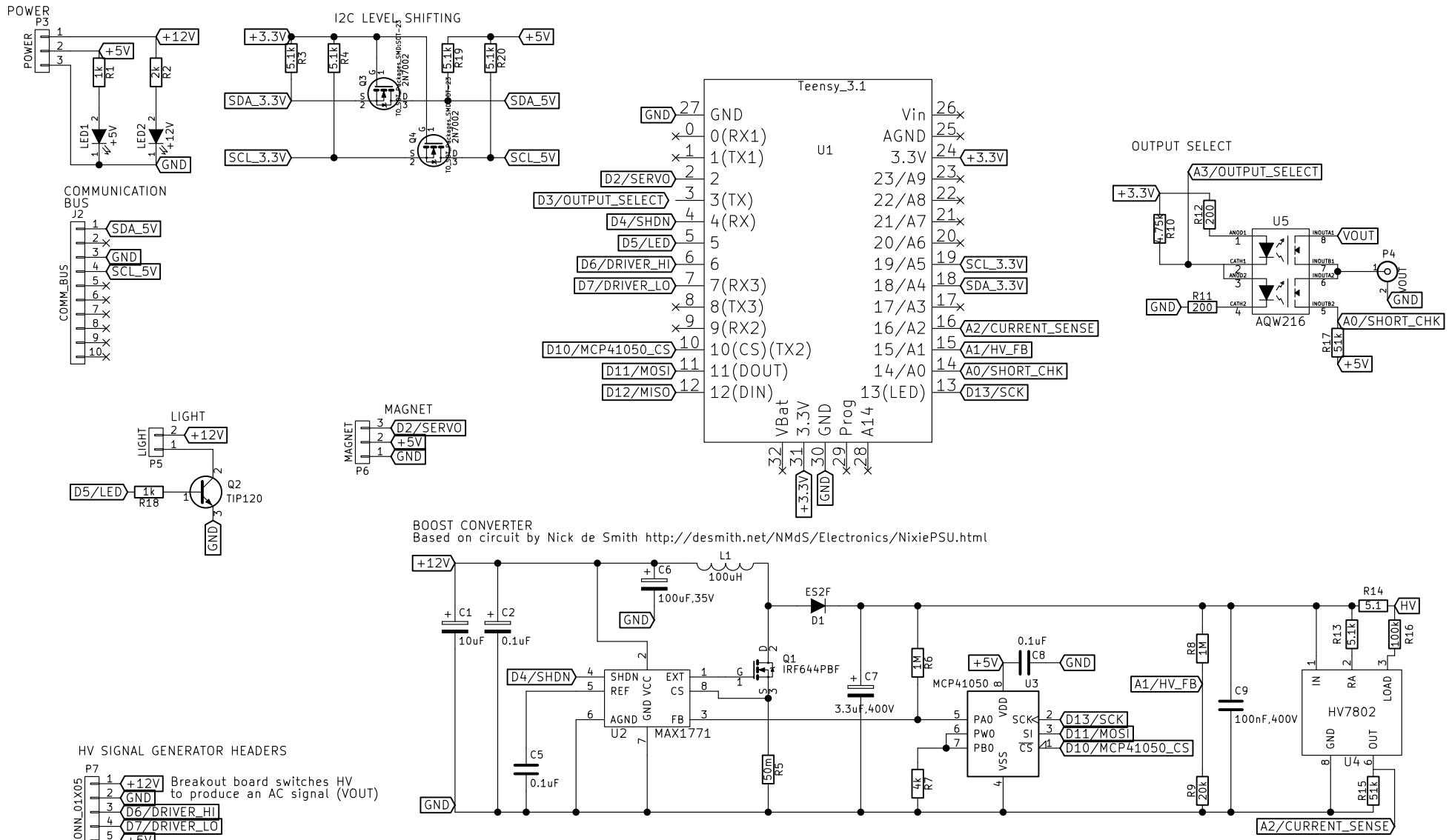

Q1 should be selected for low Qg, Rdson & Coss
R6, R8, C7 and C9 must be rated at >240V
D1 should be an ultra-fast (<50ns) recovery, 1A 240V)
C1 & C6 should be a low ESR type (e.g., AVX TPS series)
C1 & C2 should be sited very close to pin 2 (VCC) of U2
C7 should be low ESR (<3ohms and rated >240V)
If you have stability issues, a 100pF 250 V ceramic cap could be soldered on top of R8
L1 should be 2A rated (e.g., EPCOS B82479 series for 50mA output
R5 must be capable of handling at least 2A

Ryan Fobel		
Sheet: /		
File: hv_signal_generator.sch		
Title: HV signal generator board		
Size: A4	Date: 2016-04-16	**Rev: 0.3**
KiCad E.D.A. kicad 4.0.1-stable		Id: 1/1