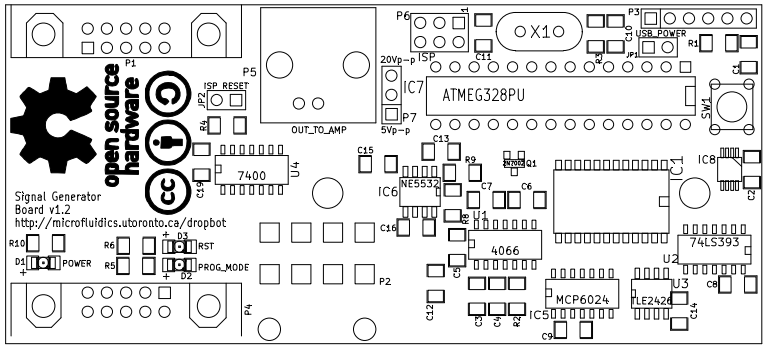

Ryan Fobel		
File: signal_generator_board.kicad_pcb Sheet: 1/1		
Title: Signal generator board		
Size: USLetter	Date:	Rev: 1.2
KiCad E.D.A. pcbnew (2013-07-07 BZR 4022)-stable		Id: 1/1