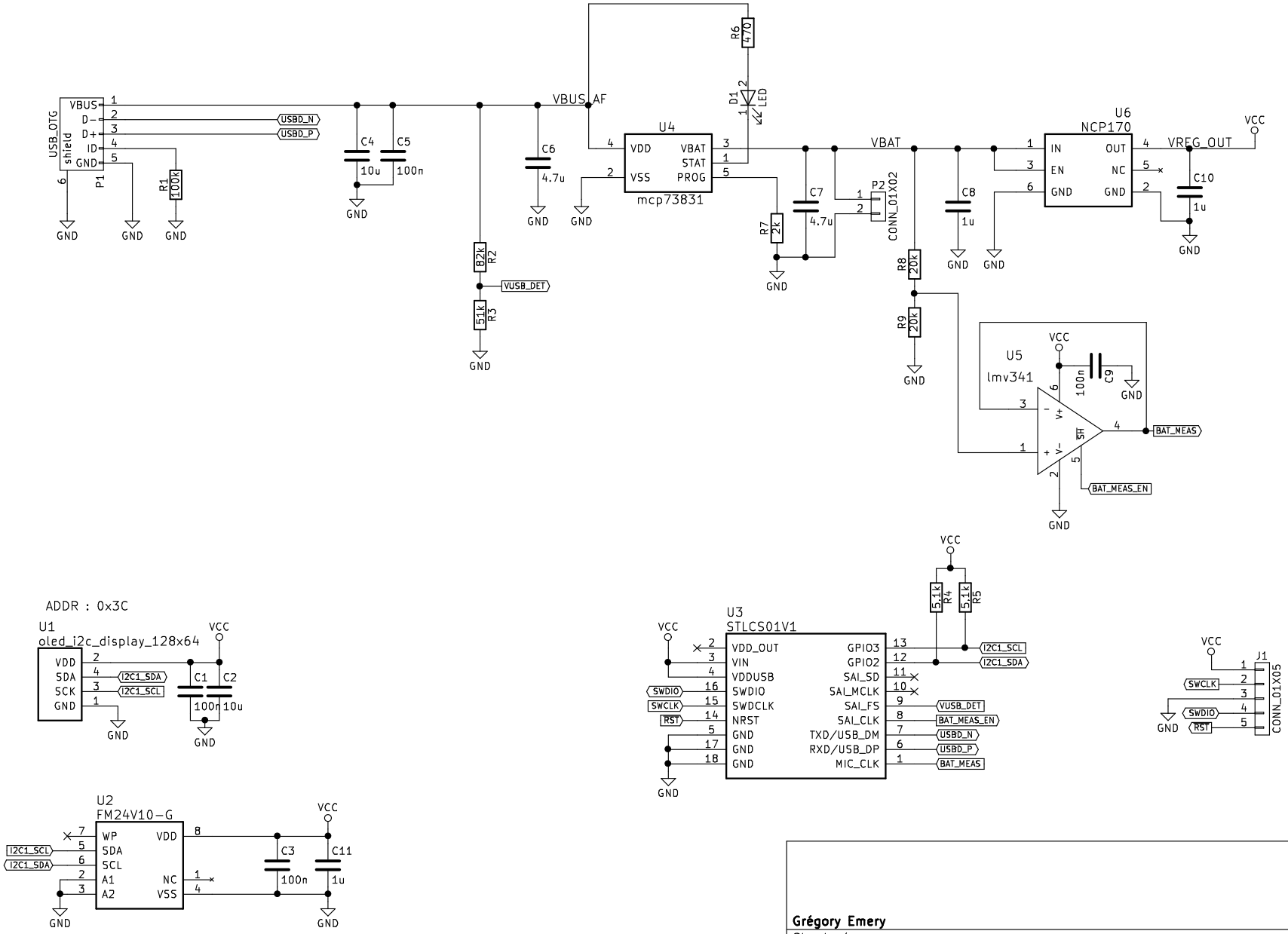

Grégory Emery

Sheet: /

File: clock.sch

Title: Gclock

Size: A4	Date: 2017-08-18	**Rev: 1.0**
KiCad E.D.A. kicad 4.0.6		Id: 1/1