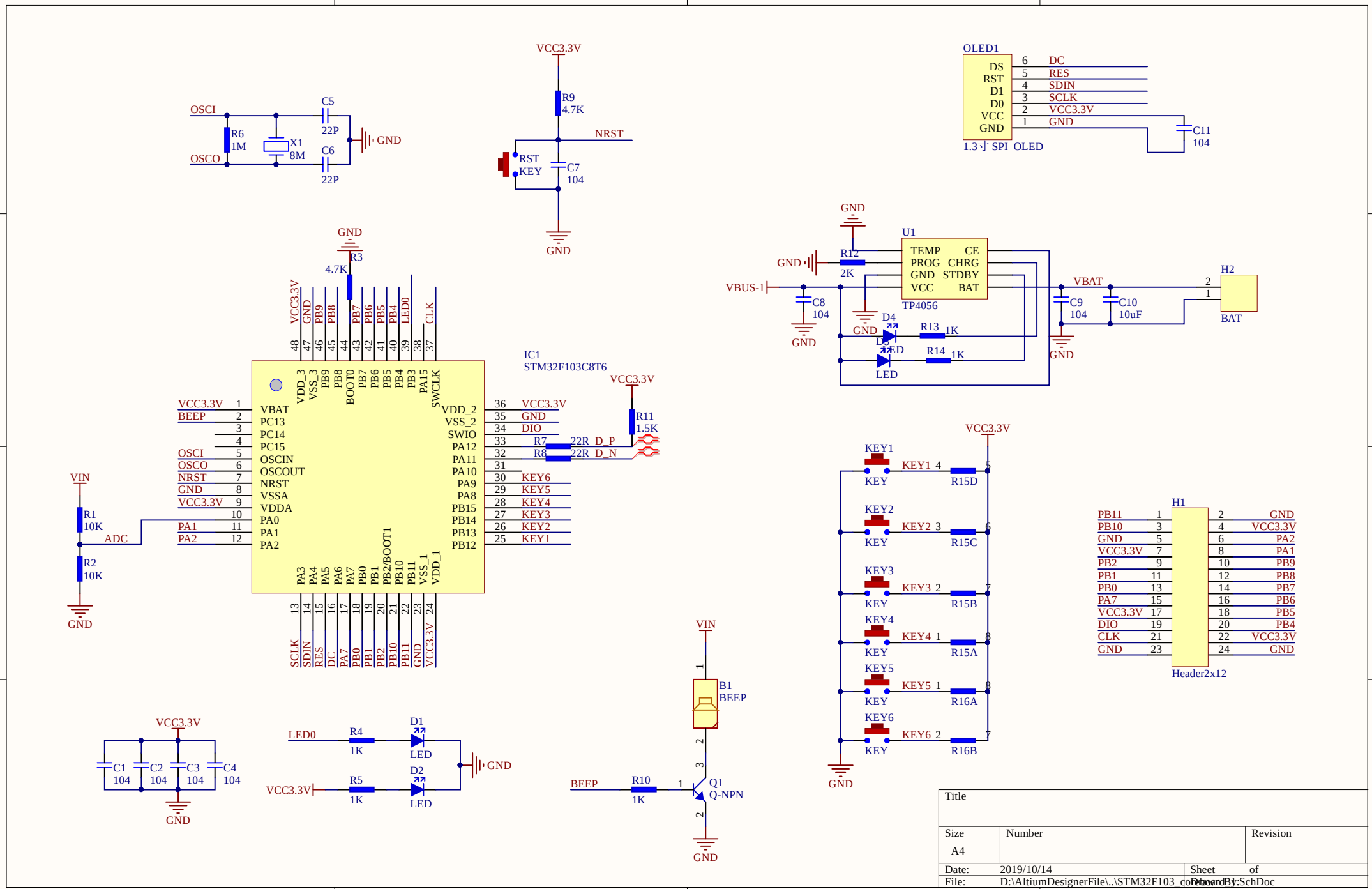

Title		
Size A4	Number	Revision
Date: 2019/10/14		Sheet of
File: D:\AltiumDesignerFile\..\STM32F103_co		Drawn By: SchDoc

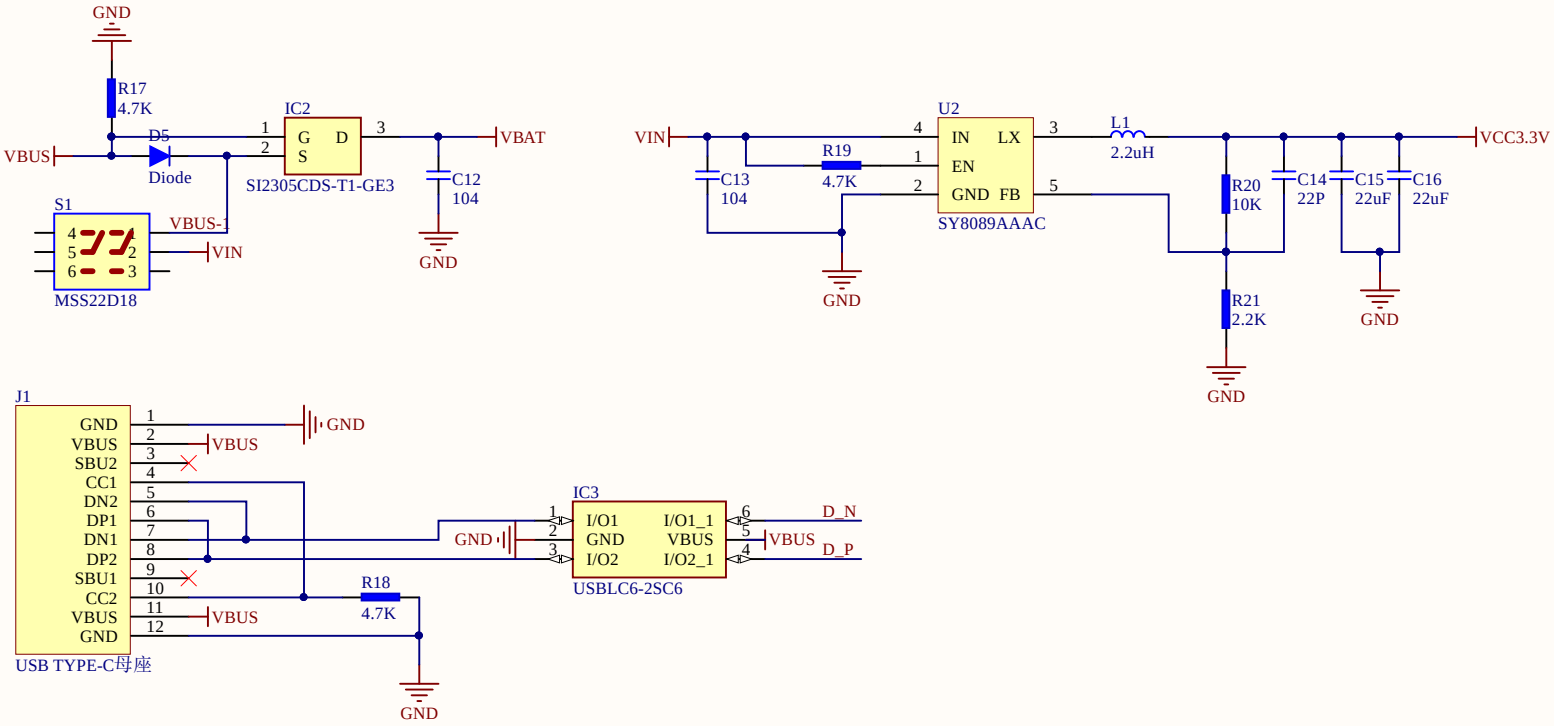

Title		
Size A4	Number	Revision
Date: 2019/10/14	Sheet of	
File: D:\AltiumDesignerFile\..\STM32F103_core_board2.SchDoc	Drawn By:	

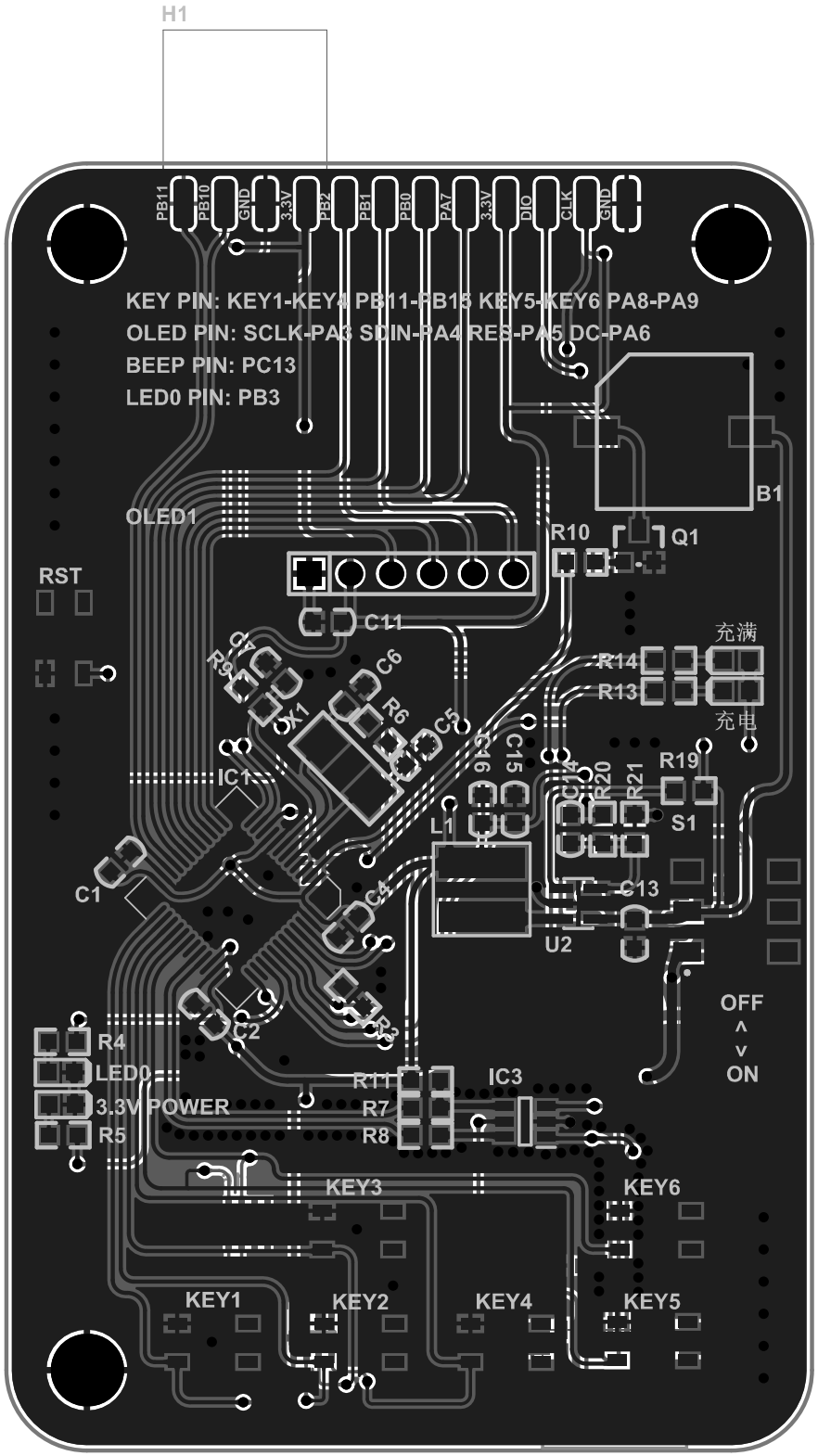
H1
PB11
PB10
GND
3.3V
PB2
PB1
PB0
PA7
3.3V
DIO
CLK
GND
KEY PIN: KEY1-KEY4 PB11-PB15 KEY5-KEY6 PA8-PA9
OLED PIN: SCLK-PA3 SDIN-PA4 RES-PA5 DC-PA6
BEEP PIN: PC13
LED0 PIN: PB3
B1
OLED1
R10
Q1
RST
C11
充满
R14
R13
充电
C7
R9
C6
X1
R6
C5
C16
C15
R19
IC1
C14
R20
R21
S1
L1
C1
C4
C13
U2
OFF
^
v
ON
C2
R3
R4
LED0
3.3V POWER
R5
R11
R7
R8
IC3
KEY3
KEY6
KEY1
KEY2
KEY4
KEY5

Comment	Description	Designator	Footprint	LibRef	Quantity
BEEP		B1	MLT-9650	BEEP	1
104	Cap	C1, C2, C3, C4, C7, C	C0603	CAP	10
22P	Cap	C5, C6, C14	C0603	CAP	3
10uF	Cap	C10	C0603	CAP	1
22uF	Cap	C15, C16	C0603	CAP	2
LED		D1, D2, D3, D4	LED0603	LED	4
Diode		D5	SOD123	Diode	1
Header2x12		H1	HDR2X12_2.54_180H	Header2x12	1
BAT		H2	BATIN	Header1x2	1
STM32F103C8T6		IC1	LQFP48	STM32F103C8T6	1
SI2305CDS-T1-GE3	Integrated Circuit	IC2	SOT95P237X112-3N	SI2305CDS-T1-GE3	1
USBLC6-2SC6	Integrated Circuit	IC3	SOT95P280X145-6N	USBLC6-2SC6	1
USB TYPE-C母座		J1	USB-TYPEC-SMT	USB TYPE-C	1
KEY		KEY1, KEY2, KEY3, KE	KEY3X4X2.5	KEY	7
2.2uH		L1	L-CDR5*5	Inductance	1
1.3寸 SPI OLED	1.3寸 SPI OLED 128x	OLED1	OLED1.3INCH	1.3寸 SPI OLED	1
Q-NPN		Q1	SOT-23	Q-NPN	1
10K		R1, R2, R20	R0603	RES	3
4.7K		R3, R9, R17, R18, R1	R0603	RES	5
1K		R4, R5, R10, R13, R1	R0603	RES	5
1M		R6	R0603	RES	1
22R		R7, R8	R0603	RES	2
1.5K		R11	R0603	RES	1
2K		R12	R0603	RES	1
Res Pack-4R	排阻	R15, R16	8P4R-0603	Res Pack-4R	2
2.2K		R21	R0603	RES	1
MSS22D18		S1	SWITCH-MSS22D18	SWITCH-MSS22D18	1
TP4056		U1	SOP8	TP4056	1
SY8089AAAC		U2	SOT-23-5	SY8089AAAC	1
8M		X1	XTAL-5032	XTAL	1