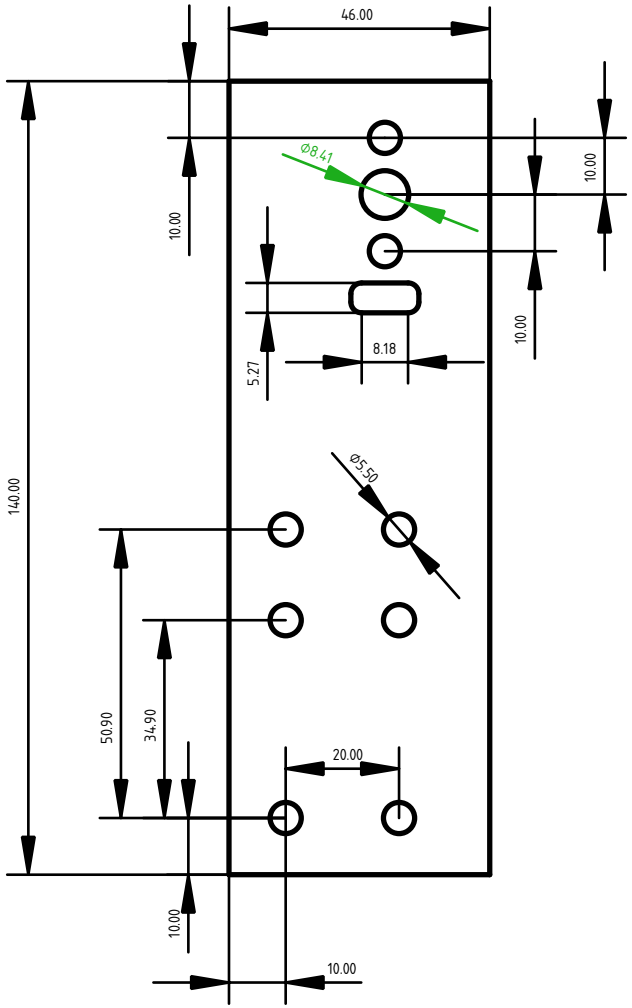

Created by:	Title:	Size:	Sheet:	Scale:
whitecatboard.org	Frame Plate	A4	X / Y	SCALE

Supplementary information:
Material: 6061-T5 Aluminium 6mm
Whitecat Desktop PNP

Part number: WHC-DESK-PNP-FRM-PLT
Drawing no.: DN

Date: DD/MM/YYYY
Revision: REV A