HP6215A

OPERATING AND SERVICE MANUAL

REGULATED DC POWER SUPPLY

6215A

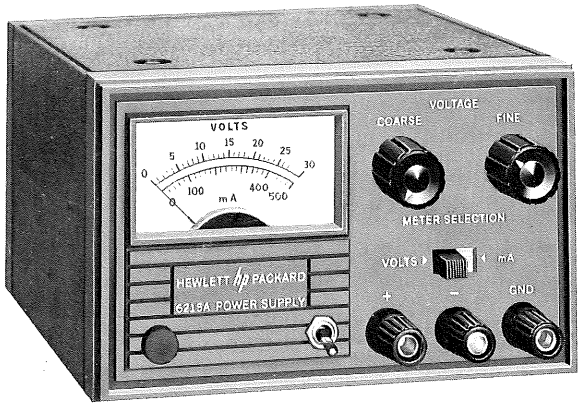

HEWLETT hp PACKARD

HP6215A

HEWLETT hp PACKARD

CERTIFICATION

The Hewlett-Packard Company certifies that this instrument was thoroughly tested and inspected and found to meet its published specifications when it was shipped from the factory. The Hewlett-Packard Company further certifies that its calibration measurements are traceable to the U.S. National Bureau of Standards to the extent allowed by the Bureau's calibration facility.

WARRANTY AND ASSISTANCE

All Hewlett-Packard products are warranted against defects in materials and workmanship. This warranty applies for one year from date of delivery, or in the case of certain major components listed in the operating manual, for the specified period. We will repair or replace products which prove to be defective during the warranty period provided they are returned to Hewlett-Packard. No other warranty is expressed or implied. We are not liable for consequential damages.

For any assistance contact your nearest Hewlett-Packard Sales and Service Office. Addresses are provided at the back of this manual.

DC POWER SUPPLY
BENCH SERIES
MODEL 6215A

OPERATING AND SERVICE MANUAL

FOR SERIALS 8G3951 - 4200

For Serials Above 8G4200
Check for inclusion of
change page.

For Serials Below 8G3950
Refer to Appendix A.

100 Locust Avenue, Berkeley Heights, New Jersey 07922

HP Part No. 06215-90001

Printed: January, 1969

TABLE OF CONTENTS

Section		Page No.
I	GENERAL INFORMATION	1-1
1-1	Description	1-1
1-5	Specifications	1-1
1-7	Options	1-1
1-9	Accessories	1-1
1-11	Instrument/Manual Identification	1-1
1-14	Ordering Additional Manuals	1-1
II	INSTALLATION	2-1
2-1	Initial Inspection	2-1
2-3	Mechanical Check	2-1
2-5	Electrical Check	2-1
2-7	Installation Data	2-1
2-9	Location	2-1
2-11	Outline Diagram	2-1
2-13	Rack Mounting	2-1
2-15	Input Power Requirements	2-2
2-17	Connections for 230V Operation	2-2
2-19	Power Cable	2-2
2-22	Repackaging For Shipment	2-2
III	OPERATING INSTRUCTIONS	3-1
3-1	Turn-On Checkout Procedure	3-1
3-3	Operation	3-1
3-5	Constant Voltage	3-1
3-7	Changing Current Limit	3-1
3-9	Connecting Load	3-1
3-12	Operation of Supply Beyond Rated Output	3-2
3-14	Optional Operating Modes	3-2
3-15	Series Operation	3-2
3-17	Parallel Operation	3-2
3-19	Special Operating Considerations	3-2
3-20	Pulse Loading	3-2
3-22	Output Capacitance	3-2
3-24	Reverse Current Loading	3-2
IV	PRINCIPLES OF OPERATION	4-1
4-1	Simplified Discussion	4-1
4-5	Detailed Circuit Analysis	4-2

Section		Page No.
IV	PRINCIPLES OF OPERATION (CONTINUED)	
4-6	Feedback Loop	4-2
4-11	Series Regulator	4-2
4-13	Constant Voltage Input Circuit	4-2
4-17	Driver and Error Amplifier	4-3
4-20	Current Limiting Circuit	4-3
4-22	Reference Circuit	4-3
4-26	Meter Circuit	4-3
V	MAINTENANCE	5-1
5-1	Introduction	5-1
5-3	Cover Removal and Replacement	5-1
5-6	General Measurement Technique	5-1
5-11	Test Equipment Required	5-2
5-13	Performance Test	5-3
5-15	Rated Output and Meter Accuracy	5-3
5-18	Load Regulation	5-3
5-20	Line Regulation	5-3
5-35	Output Impedance	5-6
5-38	Current Limit	5-7
5-40	Transient Recovery Time	5-7
5-46	Troubleshooting	5-8
5-48	Trouble Analysis	5-8
5-53	Repair and Replacement	5-11
5-55	Adjustment and Calibration	5-13
5-57	Meter Mechanical Zero	5-13
5-59	Meter Calibration	5-13
5-61	Zero Volts Output Adjustment	5-13
5-63	Output Current Limit Adjustment	5-13
VI	REPLACEABLE PARTS	6-1
6-1	Introduction	6-1
6-4	Ordering Information	6-1
	Reference Designators	
	Abbreviations	
	Manufacturers	
6-8	Code List of Manufacturers	6-2
	Parts List Table	
APPENDIX A		A-1

MANUAL CHANGES

DC POWER SUPPLY
Model 6215A
Manual Serial Number Prefix 8M

Make all corrections in the manual according to errata below, then check the following table for your power supply serial number and enter any listed change(s) in the manual.

SERIAL		MAKE CHANGES
Prefix	Number	
9C	4201 - 4450	1
ALL	-	Errata
9C	4451 - up	1, 2

CHANGE 1:

In replaceable parts table, make the following change:
R12: Change to 1KΩ ±5% 3W, hp Part No. 0813-0001.

▶ERRATA:

On Page 5-4, Figure 5-5, change R_L for Models 6215A and 6216A to 62.5Ω.

Change Paragraph 3-18, third sentence to read as follows:
"The output of each power supply can be set separately."

▶CHANGE 2:

In replaceable parts table, make the following change:
R28: 820Ω, ±5%, $\frac{1}{2}$W, hp Part No. 0686-8215.

7-3-69

TABLE OF CONTENTS (CONTINUED)

LIST OF TABLES

Table		Page No.
1-1	Specifications	1-2
5-1	Test Equipment Required	5-2
5-2	Common Troubles	5-9
5-3	Reference, Bias, and Filtered DC Troubleshooting	5-10
5-4	Low Output Voltage Troubleshooting	5-10
5-5	High Output Voltage Troubleshooting	5-11
5-6	Selected Semiconductor Characteristics	5-11
5-7	Calibration Adjustment Summary	5-13

LIST OF ILLUSTRATIONS

Figure		Page No.
1-1	DC Power Supply	iv
2-1	Outline Diagram	2-1
2-2	Rack Kit with Three BENCH Supplies	2-1
2-3	Input Power Transformer Connections	2-2
3-1	Front Panel Controls and Indicators	3-1
4-1	Simplified Schematic	4-1
5-1	Front Panel Terminal Connections	5-1
5-2	Output Current Measurement Technique	5-1
5-3	Differential Voltmeter Substitute Test Setup	5-3
5-4	Output Current, Test Setup	5-3
5-5	Load Regulation, Test Setup	5-4
5-6	Ripple and Noise, Test Setup	5-5
5-7	Noise Spike Test Setup	5-6
5-8	Output Impedance, Test Setup	5-6
5-9	Transient Recovery Time, Test Setup	5-7
5-10	Transient Recovery Time, Waveforms	5-8
5-11	Servicing Printed Wiring Boards	5-12

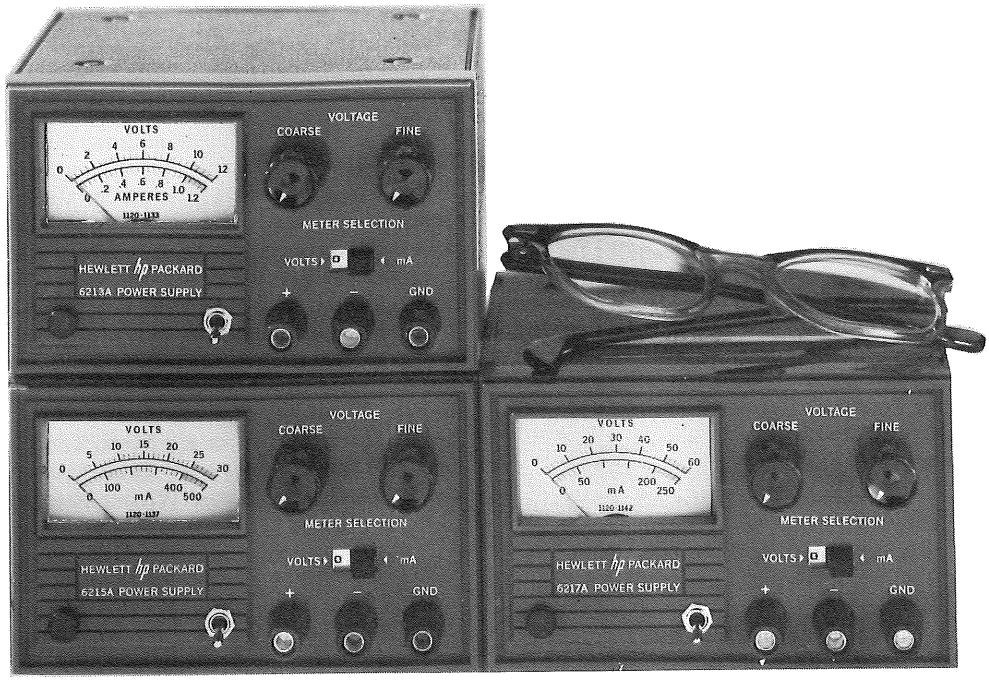

Figure 1-1. DC Power Supply

SECTION I
GENERAL INFORMATION

1-1 DESCRIPTION

1-2 This power supply, Figure 1-1, is completely transistorized and suitable for either bench or relay rack operation. It is a compact, regulated, Constant Voltage/Current Limiting supply. The output voltage can be continuously adjusted throughout the output voltage range. The power supply is fully protected from overloads by a fixed current limit which is set by means of an internal adjustment. The current limit circuit permits series and parallel connection of two or more supplies when greater voltage or current is desired.

1-3 Either the positive or negative output terminal may be grounded or the power supply can be operated floating at up to a maximum of 300 volts off ground.

1-4 A single meter is used to measure either output voltage or output current in volts and milliamps, respectively. The voltage or current range is selected by the METER switch on the front panel.

1-5 SPECIFICATIONS

1-6 Detailed specifications for the power supply are given in Table 1-1.

1-7 OPTIONS

1-8 Options are factory modifications of a standard instrument that are requested by the customer. The following options are available for the instrument covered by this manual. Where necessary, detailed coverage of the options is included throughout the manual.

Option No.	Description
28	230Vac, 50-400Hz, Single-Phase Output: Factory modification consists of reconnecting the input transformer for 230Vac operation. Refer to Section II for further details.

1-9 ACCESSORIES

1-10 The accessories listed in the following chart may be ordered with the power supply or separately from your local Hewlett-Packard field sales office (refer to list at rear of manual for addresses).

hp Part No.	Description
14521A	$3\frac{1}{2}$" High Rack Kit for mounting up to three BENCH supplies. (Refer to Section II for details.)
14522A	7" High Rack Kit for mounting up to six BENCH supplies. (Refer to Section II for details.)

1-11 INSTRUMENT/MANUAL IDENTIFICATION

1-12 Hewlett-Packard power supplies are identified by a three-part serial number tag. The first part is the power supply model number. The second part is the serial number prefix, which consists of a number-letter combination that denotes the date of a significant design change. The number designates the year, and the letter A through L designates the month, January through December respectively. The third part is the power supply serial number.

1-13 If the serial number prefix on your power supply does not agree with the prefix on the title page of this manual, change sheets are included to update the manual. Where applicable, backdating information is given in an appendix at the rear of the manual.

1-14 ORDERING ADDITIONAL MANUALS

1-15 One manual is shipped with each power supply. Additional manuals may be purchased from your local Hewlett-Packard field office (see list at rear of this manual for addresses). Specify the model number, serial number prefix, and hp stock number provided on the title page.

Table 1-1. Specifications

INPUT:
105-125Vac, single phase, 50-400Hz.

OUTPUT:
0-25Vdc, 0-400mA.

LOAD REGULATION:
Less than 0.01% plus 1mV for a full load to no load change in output current.

LINE REGULATION:
Less than 0.01% plus 4mV for any line voltage change within the input rating.

RIPPLE AND NOISE:
Less than 200μVrms/1mV p-p (dc to 20MHz).

TEMPERATURE RANGES:
Operating: 0 to 55°C. Storage: -40 to +85°C.

TEMPERATURE COEFFICIENT:
Less than 0.02% plus 1mV per degree Centigrade.

STABILITY:
Less than 0.10% plus 5mV total drift for 8 hours after an initial warm-up time of 30 minutes at constant ambient, constant line voltage, and constant load.

INTERNAL IMPEDANCE AS A CONSTANT VOLTAGE SOURCE:
Less than 0.03 ohms from dc to 1kHz.
Less than 0.5 ohms from 1kHz to 100kHz.
Less than 3.0 ohms from 100kHz to 1MHz.

TRANSIENT RECOVERY TIME:
Less than 50μsec for output recovery to within 10mV following a full load current change in the output.

OVERLOAD PROTECTION:
A fixed current limiting circuit protects the power supply for all overloads including a direct short placed across the output terminals in constant voltage operation.

METER:
The front panel meter can be used as either a 0-30V voltmeter or as a 0-500mA ammeter.

OUTPUT CONTROLS:
Coarse and fine voltage controls set desired output voltage. Meter switch selects voltage or current.

OUTPUT TERMINALS:
Three "five-way" output posts are provided on the front panel. All power supply output terminals are isolated from the chassis and either the positive or negative terminal may be connected to the chassis through a separate ground terminal located on the output terminal strip.

COOLING:
Convection cooling is employed. The supply has no moving parts.

SIZE:
5¼"/13,34cm W x 3¼"/8,26cm H x 7"/17,78cm D. Using a Rack Mounting Kit, three units can be mounted side by side in a standard 19" relay rack.

WEIGHT:
5.25 lbs./2,38 kg. net, 7 lbs./3,17 kg. shipping.

FINISH: Dark Gray

POWER CORD:
A three-wire, five-foot power cord is provided with each unit.

SECTION II
INSTALLATION

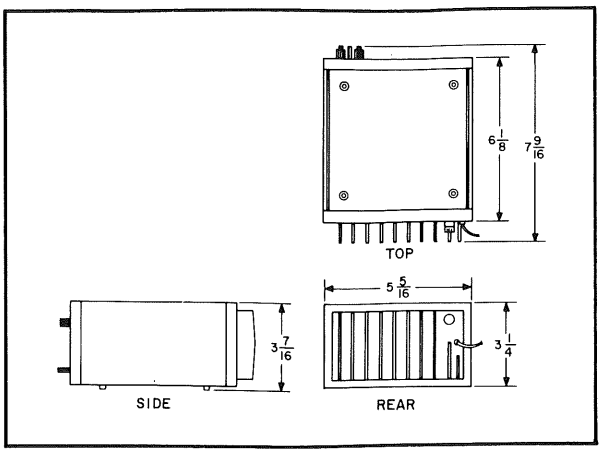

Figure 2-1. Outline Diagram

2-1 INITIAL INSPECTION

2-2 Before shipment, this instrument was inspected and found to be free of mechanical and electrical defects. As soon as the instrument is unpacked, inspect for any damage that may have occurred in transit. Save all packing materials until the inspection is completed. If damage is found, proceed as described in the Claim for Damage in Shipment section of the warranty page at the rear of this manual.

2-3 MECHANICAL CHECK

2-4 This check should confirm that there are no broken knobs or connectors, that the cabinet and panel surfaces are free of dents and scratches, and that the meter is not scratched or cracked.

2-5 ELECTRICAL CHECK

2-6 The instrument should be checked against its electrical specifications. Section V includes an "in-cabinet" performance check to verify proper instrument operation.

2-7 INSTALLATION DATA

2-8 The instrument is shipped ready for bench operation. It is necessary only to connect the instrument to a source of power and it is ready for operation.

2-9 LOCATION

2-10 This instrument is air cooled. Sufficient space should be allotted so that a free flow of cooling air can reach the rear of the instrument when it is in operation. It should be used in an area where the ambient temperature does not exceed 55°C.

2-11 OUTLINE DIAGRAM

2-12 Figure 2-1 illustrates the outline shape and dimensions of Models 6213A through 6218A.

2-13 RACK MOUNTING

2-14 This instrument may be rack mounted separately or with a maximum of two other BENCH Series supplies as shown in Figure 2-2. The

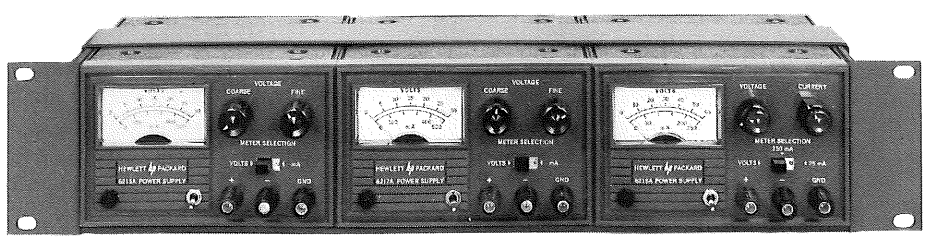

Figure 2-2. Rack Kit with Three BENCH Supplies

units are placed in the Rack Mounting Frame. The Rack Mounting Frame is then fastened to the rack frame.

2-15 INPUT POWER REQUIREMENTS

2-16 This power supply may be operated continuously from either a nominal 115 Volt or 230 Volt 50-400Hz power source. The unit as shipped from the factory, is wired for 115 Volt operation. The input power required when operated from a 115 Volt power source at full load is:

Model	Input Current	Input Power
6213A and 6214A	0.29A	28W
6215A and 6217A	0.25A	26W
6216A and 6218A	0.25A	26W

2-17 CONNECTIONS FOR 230 VOLT OPERATION (Figure 2-3)

2-18 Normally, the two primary windings of the input transformer are connected in parallel for operation from 115 Volt source. To convert the power supply to operation from a 230 Volt source, the power transformer windings are connected in series as follows:

a. Unplug the line cord and remove the top cover as described in Paragraph 5-3.

b. Remove the jumpers between taps 4-2 and 3-1. Solder a jumper between taps 3-2 on the input power transformer T1, see Figure 2-3.

c. Replace existing fuse with a 0.5 Ampere, 230 Volt fuse.

d. Replace existing line cord plug with a standard 230 Volt plug.

2-19 POWER CABLE

2-20 To protect operating personnel, the National Electrical Manufacturers Association (NEMA) recommends that the instrument panel and cabinet be grounded. This instrument is equipped with a three conductor power cable. The third conductor is the ground conductor and when the cable is plugged

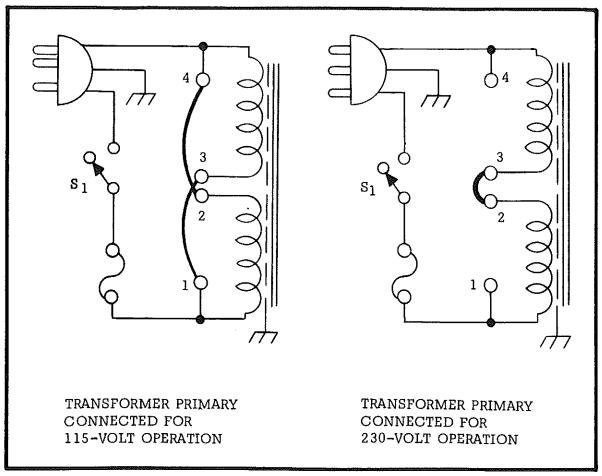

Figure 2-3. Input Power Transformer, Connections

into an appropriate receptacle, the instrument is grounded. The offset pin on the power cable three-prong connector is the ground connection.

2-21 To preserve the protection feature when operating the instrument from a two-contact outlet, use a three-prong to two-prong adapter and connect the green lead on the adapter to ground.

2-22 REPACKAGING FOR SHIPMENT

2-23 To insure safe shipment of the instrument, it is recommended that the package designed for the instrument be used. The original packaging material is reusable. If it is not available, contact your local Hewlett-Packard field office to obtain the materials. This office will also furnish the address of the nearest service office to which the instrument can be shipped. Be sure to attach a tag to the instrument which specifies the owner, model number, full serial number, and service required, or a brief description of the trouble.

SECTION III
OPERATING INSTRUCTIONS

3-1 TURN-ON CHECKOUT PROCEDURE

3-2 The following checkout procedure describes the use of the front panel controls and indicators and ensures that the supply is operational:

a. Set AC toggle switch (1) upward to on position; indicator (2) should light.

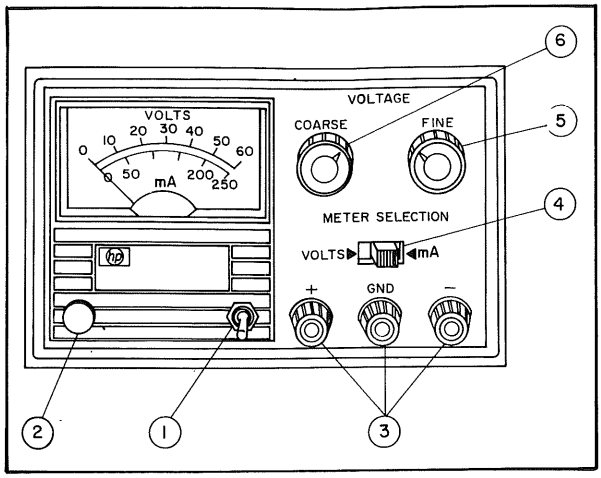

Figure 3-1. Front Panel Controls and Indicators

b. Set METER SELECTION switch (4) to VOLTS position.

c. Turn COARSE (6) and FINE (5) VOLTAGE controls fully ccw to ensure that output decreases to 0 V, then turn the VOLTAGE controls fully cw to ensure that output voltage increases to the maximum rated output voltage.

d. Connect a milliammeter across the output of the supply (3) to check that the current limit circuit within the supply is limiting the output current to:

Model	Current Limit
6213A	1300 ±50mA
6215A	475 ±10mA
6217A	250 ±10mA

e. Remove milliammeter and connect load to output terminals.

3-3 OPERATION

3-4 The power supply can be operated as a single unit (normal operation), in parallel, or in series. The output of the supply can be floated up to 300 volts off ground.

3-5 CONSTANT VOLTAGE

3-6 To select a constant voltage output turn on the supply and, with no load connected, adjust the VOLTAGE controls for the desired output voltage. To check the current limit, connect an external ammeter across the output of the supply, turn the VOLTAGE controls fully clockwise, and observe the reading. The current limit is factory adjusted in excess of the current rating of the supply. If the existing current is not compatible with the anticipated load requirements, the limit can be changed as outlined in the following paragraphs.

3-7 CHANGING CURRENT LIMIT

3-8 The current limit can be varied by adjusting resistor R50, located on the printed wiring board. This adjustment procedure is described in Paragraph 5-63. The range of the current limit control R50 is as follows:

Model	Current Limit Range
6213A	800 - 1700mA
6215A	300 - 540mA
6217A	180 - 300mA

The current limit is normally adjusted to a value far in excess of the current rating of the supply to prevent the deterioration of line and load regulation. Therefore, if for any reason the current limit is adjusted so that the output current is close to this value, the performance will not meet the published specifications.

3-9 CONNECTING LOAD

3-10 Each load should be connected to the power supply output terminals using separate pairs of connecting wires. This will minimize mutual coupling effects between loads and will retain full advantage of the low output impedance of the power supply. Each pair of connecting wires should be as short as possible and twisted or shielded to reduce noise pickup. (If shield is used, connect one end to power supply ground terminal and leave the other end unconnected.)

3-11 If load considerations require that the output power distribution terminals be remotely located from the power supply, then the power supply output terminals should be connected to the remote distribution terminals via a pair of twisted or shielded wires and each load separately connected

to the remote distribution terminals.

3-12 OPERATION OF SUPPLY BEYOND RATED OUTPUT

3-13 The shaded area on the front panel meter face indicates the amount of output voltage or current that is available in excess of the normal rated output. Although the supply can be operated in this shaded region without being damaged, it cannot be guaranteed to meet all of its performance specifications. However, if the line voltage is maintained above 115 VAC, the supply will probably operate within its specifications.

3-14 OPTIONAL OPERATING MODES

3-15 SERIES OPERATION

3-16 Normal Series Connections. Two or more power supplies can be operated in series to obtain a higher voltage than that available from a single supply. When this connection is used, the output voltage is the sum of the voltages of the individual supplies. Each of the individual supplies must be adjusted in order to obtain the total output voltage. The power supply contains a protective diode connected internally across the output which protects the supply if one power supply is turned off while its series partner(s) is on.

3-17 PARALLEL OPERATION

3-18 Normal Parallel Connections. Two or more power supplies can be connected in parallel to obtain a total output current greater than that available from one power supply. The total output current is the sum of the output currents of the individual power supplies. The output CURRENT controls of each power supply can be separately set. The output voltage controls of one power supply should be set to the desired output voltage; the other power supply should be set for a slightly larger output voltage. The supply set to the lower output voltage will act as a constant voltage source; the supply set to the higher output will act as a current limit source, dropping its output voltage until it equals that of the other supply. The constant voltage source will deliver only that fraction of its total rated output current which is necessary to fulfill the total current demand.

3-19 SPECIAL OPERATING CONSIDERATIONS

3-20 PULSE LOADING

3-21 The power supply will automatically cross over from constant voltage to current limit operation in response to an increase (over the preset limit) in the output current. Although the preset limit may be set higher than the average output current high peak currents (as occur in pulse loading) may exceed the preset current limit and cause crossover to occur. If this crossover limiting is not desired, set the preset limit for the peak requirement and not the average.

3-22 OUTPUT CAPACITANCE

3-23 An internal capacitor, across the output terminals of the power supply, helps to supply high-current pulses of short duration during constant voltage operation. Any capacitance added externally will improve the pulse current capability, but will decrease the safety provided by the current limiting circuit. A high-current pulse may damage load components before the average output current is large enough to cause the current limiting circuit to operate.

3-24 REVERSE CURRENT LOADING

3-25 Active loads connected to the power supply may actually deliver a reverse current to the power supply during a portion of its operating cycle. An external source cannot be allowed to pump current into the supply without loss of regulation and possible damage to the output capacitor. To avoid these effects, it is necessary to preload the supply with a dummy load resistor so that the power supply delivers current through the entire operating cycle of the load device.

3-26 Reverse Voltage Protection. A diode is connected across the output terminals with reverse polarity. This diode protects the output electrolytic capacitors and the series regulator transistors from the effects of a reverse voltage applied across the output terminals. For example, in series operation of two supplies, if the AC is removed from one supply, the diode prevents damage to the unenergized supply which would otherwise result from a reverse polarity voltage.

Since series regulator transistors or driver transistors cannot withstand reverse voltage, another diode is connected across the series transistor. This diode protects the series transistors in parallel or Auto-Parallel operation if one supply of the parallel combination is turned on before the other.

SECTION IV
PRINCIPLES OF OPERATION

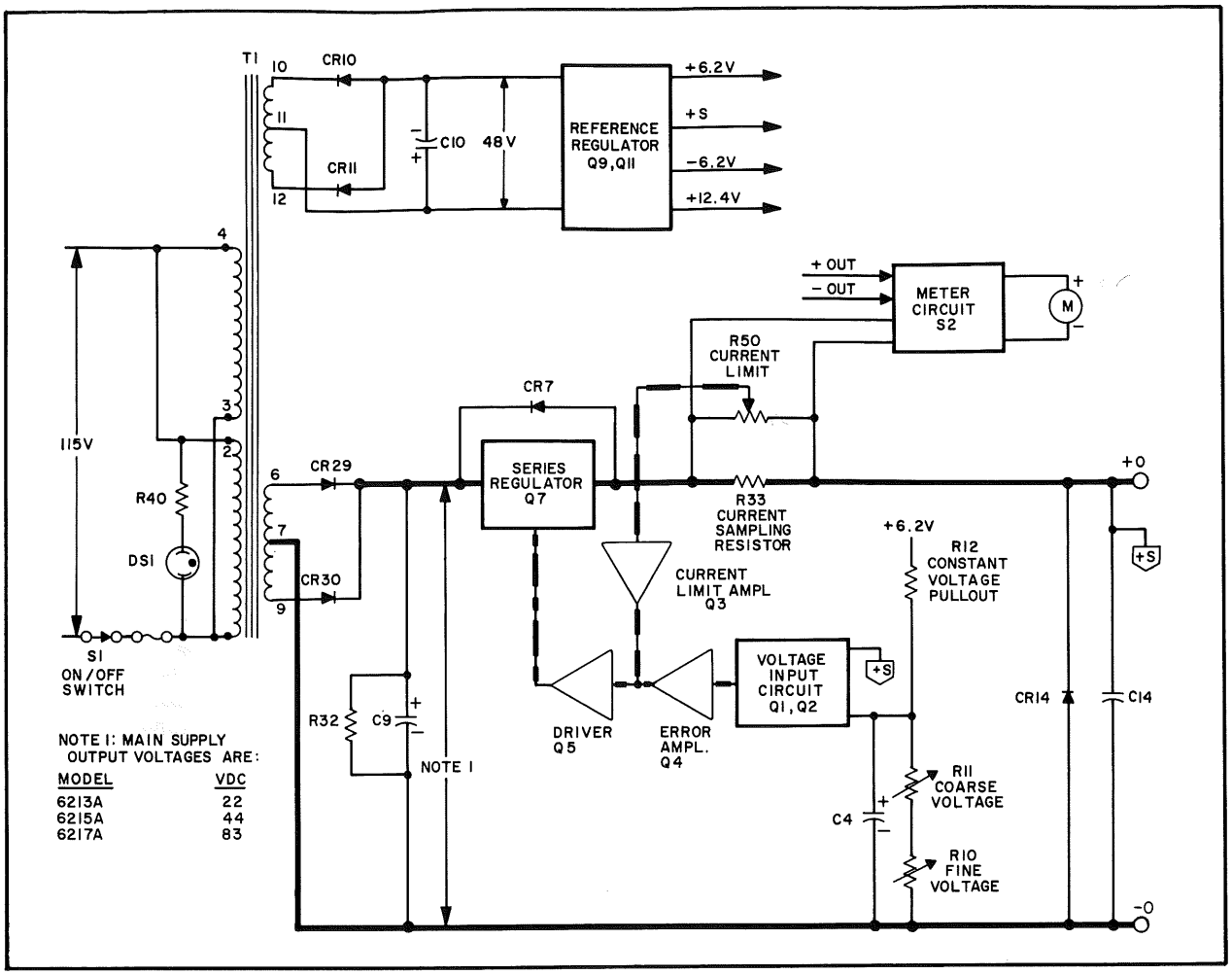

Figure 4-1. Simplified Schematic

4-1 SIMPLIFIED DISCUSSION

4-2 The power supply, as shown on the simplified schematic diagram of Figure 4-1, consists of a power transformer, rectifier and filter, series regulator, error amplifier and driver, constant voltage input circuit, current limiting circuit, reference regulator circuit, and a metering circuit.

4-3 The input line voltage passes through the power transformer to the rectifier and filter. The rectifier-filter converts the ac input to raw dc which is fed to the positive terminal via the regulator and current sampling resistor network. The regulator, part of the feedback loop, is made to alter its conduction to maintain a constant output voltage. The voltage developed across the current sampling resistor is the input to the current limiting circuit. If the output current that passes through the sampling resistor exceeds a certain predetermined level, the current limiting circuit applies a feedback signal to the series regulator which alters the regulator's conduction so that the output current does not exceed the current limit. The constant voltage input circuit obtains its input by sampling the output voltage of the supply. Any changes in output voltage are detected in the constant voltage input circuit, amplified by the error

amplifier and driver, and applied to the series regulator in the correct phase and amplitude to counteract the change in output voltage. The reference regulator circuit provides stable reference voltages which are used by the constant voltage input circuit for comparison purposes. The meter circuit provides indications of output voltage or current in either operating mode.

4-4 Diode CR14, connected across the output terminals of the power supply, is a protective device which prevents internal damage that might occur if a reverse voltage were applied across the output terminals.

4-5 DETAILED CIRCUIT ANALYSIS (Refer to overall schematic diagram at rear of manual)

4-6 FEEDBACK LOOP

4-7 The feedback loop functions continuously to keep the output voltage constant, during constant voltage operation, and the output current at a safe limit during current limit operation. For purposes of this discussion, assume that the unit is in constant voltage operation and that the programming resistors R10 and R11 have been adjusted so that the supply is yielding the desired output voltage. Further assume that the output voltage instantaneously rises (goes positive) due to a variation in the external load circuit.

4-8 Note that the change may be in the form of a slow rise in the output voltage or a positive going AC signal. An AC signal is coupled to the voltage input circuit through capacitor C1 and a DC voltage is coupled through R10 and R11.

4-9 The rise in output voltage causes the voltage at the base of Q1 to decrease (go negative). Q1 now decreases its conduction and its collector voltage rises. The positive going error voltage is amplified and inverted by Q4 and fed to the base of series transistor Q7 via emitter follower Q5. The negative going input causes Q7 to decrease its conduction so that it drops more of the line voltage, and reduces the output voltage to its original level.

4-10 When the external load resistance decreases, the output current increases until the current limit is reached. The positive voltage developed at the wiper of R50 causes Q3 to conduct. CR4 becomes forward biased and controls the conduction of Q5 and Q7. Any further decreases in load resistance increase the negative voltage on the base of Q5 which decreases the conduction of Q7. Thus, through feedback action the output current is limited to the value at which CR4 conducts.

4-11 SERIES REGULATOR

4-12 The series regulator consists of transistor stage Q7 (see schematic at rear of manual). The regulator serves as a series control element by altering its conduction so that the output voltage is kept constant and the current limit is never exceeded. The conduction of Q5 is controlled by the feedback voltage obtained from driver Q4. Diode CR7, connected across the regulator circuit, protects the series transistor against reverse voltages that could develop across it during parallel or auto-parallel operation if one supply is turned on before the other.

4-13 CONSTANT VOLTAGE INPUT CIRCUIT (Refer to overall schematic at rear of manual)

4-14 The circuit consists of the coarse and fine programming resistors (R10 and R11), and a differential amplifier stage (Q1, Q2, and associated components). Drift due to thermal differentials is minimized, since both transistors operate at essentially the same temperature.

4-15 The constant voltage input circuit continuously compares a fixed reference voltage with a portion of the output voltage and, if a difference exists, produces an error voltage whose amplitude and phase is proportional to the difference. The error output is fed back to the series regulator, through the error and driver amplifiers. The error voltage changes the conduction of the series regulator which, in turn, alters the output voltage so that the difference between the two input voltages applied to the differential amplifier is reduced to zero. The above action maintains the output voltage constant.

4-16 Stage Q2 of the differential amplifier is connected to a common (+S) potential through impedance equalizing resistor R6. Resistors R5 and R7 are used to zero bias the input stage, offsetting minor base-to-emitter voltage differences in Q1 and Q2. The base of Q1 is connected to a summing point at the junction of the programming resistors and the current pullout resistor, R12. Instantaneous changes in output voltage result in an increase or decrease in the summing point potential. Q1 is then made to conduct more or less, in accordance with the summing point voltage change. The resultant output error voltage is fed back to the series regulator via the remaining components of the feedback loop. Resistor R1, in series with the base Q1, limits the current through the programming resistors during rapid voltage turn-down. Diodes CR1 and CR2 form a limiting network which prevents excessive voltage excursions from over driving stage Q1. Capacitor C1,

shunting the programming resistors, increases the high frequency gain of the input amplifier.

4-17 DRIVER AND ERROR AMPLIFIER (Refer to overall schematic at rear of manual)

4-18 The error and driver amplifiers amplify the error signal from the constant voltage input circuit to a level sufficient to drive the series regulator transistor. Driver Q5 also receives a current limiting input if CR4, the current limiting diode, becomes forward biased.

4-19 Stage Q4 contains a feedback equalizer network, C3 and R17, which provides for high frequency roll off in the loop gain in order to stabilize the feedback loop.

4-20 CURRENT LIMITING CIRCUIT

4-21 Current limiting occurs when transistor Q3 conducts. This is determined by the voltage drop across current sampling resistor R33 and the adjustment of current limit potentiometer R50. When the output current reaches the limit value, the positive voltage (with respect to +S) on the wiper arm of R50 causes Q3 to conduct. Diode CR4 becomes forward biased clamping the base of Q5 to a potential which decreases the conduction of the series regulator, thus limiting the output current. Potentiometer R50 permits the base potential of Q3 to be varied and thus changes the current limiting threshold.

4-22 REFERENCE CIRCUIT (Refer to schematic at rear of manual)

4-23 The reference circuit is a separate power supply similar to the main supply. It provides stable reference voltages which are used throughout the unit. The reference voltages are all derived from smoothed dc obtained from the full wave rectifier (CR10 and CR11) and filter capacitor C5. The -6.2V reference voltage is derived from VR1 which is a second dc source regulating at 6.2vdc. Current for VR1 is supplied by the (-) side of C5 and flows through VR1, the base-emitter junction of Q7, R20, and back to the positive side of C5.

4-24 The base-emitter junction of Q11 is held constant by 6.2V zener diode VR7 which regulates line voltage changes that alter the voltage across C5. Thus Q11 is a constant current source feeding 12.4V zener diode VR4 and 6.2V temperature-compensated zener diode VR6.

4-25 Resistors R27 and R30 form a voltage divider across the stable 6.2 volts developed by VR1. The base-emitter junction of Q9 is therefore held constant by the voltage developed across R27. Thus Q9 provides a constant current to zener diode VR3, which regulates the -6.2V source.

4-26 METER CIRCUIT

4-27 This circuit provides indications of output voltage or output current. With METER SELECTION switch S2 set to VOLTS position the meter, in series with R38, is connected directly across the output of the supply. With S2 set to the MA position the meter, in series with R37 and R47, is connected across the current sampling resistor R33. Potentiometer R47 adjusts the electrical meter zero in the MA position.

SECTION V
MAINTENANCE

5-1 INTRODUCTION

5-2 Upon receipt of the power supply, the performance check (Paragraph 5-13) should be made. This check is suitable for incoming inspection. If a fault is detected in the power supply while making the performance check or during normal operation, proceed to the troubleshooting procedures (Paragraph 5-46). After troubleshooting and repair (Paragraph 5-53), perform any necessary adjustments and calibrations (Paragraph 5-55). Before returning the power supply to normal operation, repeat the performance check to ensure that the fault has been properly corrected and that no other faults exist. Before doing any maintenance checks, turn-on power supply, allow a half-hour warm-up, and read the general information regarding measurement techniques (Paragraph 5-6).

5-3 COVER REMOVAL AND REPLACEMENT

5-4 To remove the top and bottom covers, proceed as follows:

a. Insert a small screwdriver in each of the four notches at the front of the unit at the top and bottom. Push the screwdriver under the front panel and gently pry toward the front of the unit to release the holding mechanism.

b. Pull the front panel forward until it clears the top and bottom covers.

c. Remove the rear cover by repeating step a.

d. Pull the rear cover until it clears the top and bottom covers. Then lift off the top cover and lift the unit out of the bottom cover.

5-5 To replace the top and bottom covers, proceed as follows:

a. Place the unit into the bottom cover (identified by the four protruding feet) and align the heat sink into the track in the bottom cover.

b. Place the top cover over the unit and align the track over the heat sink.

c. While holding the covers together at the rear of the unit, carefully push on the rear panel.

d. Position the front panel so that the two slotted ears at the bottom of the panel align with the printed wiring boards.

e. Carefully push on the front panel.

5-6 GENERAL MEASUREMENT TECHNIQUES

5-7 The measuring device must be connected as close to the output terminals as possible when measuring the output impedance, transient response, regulation, or ripple of the power supply in order to achieve valid measurements. A measurement made across the load includes the impedance of the leads to the load and such lead lengths can easily have an impedance several orders of magnitude greater than the supply impedance, thus invalidating the measurement.

5-8 The monitoring device should be connected as shown in Figure 5-1. Note that when measurements are made at the front terminals, the monitoring leads are connected at A, not B, as shown in Figure 5-1. Failure to connect the measuring device at A will result in a measurement that includes the resistance of the leads between the output terminals and the point of connection.

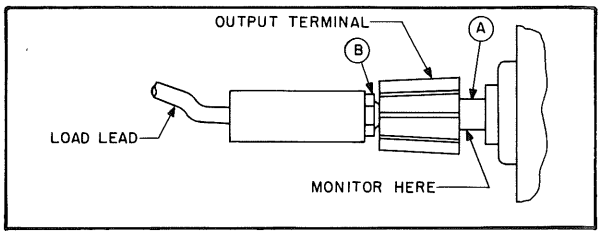

Figure 5-1. Front Panel Terminal Connections

5-9 For output current measurements, the current sampling resistor should be a four-terminal resistor. The four terminals are connected as shown in Figure 5-2. In addition, the resistor should be of the low noise, low temperature coefficient (less than 30 ppm/°C) type and should be used at no more than 5% of its rated power so that its temperature rise will be minimized.

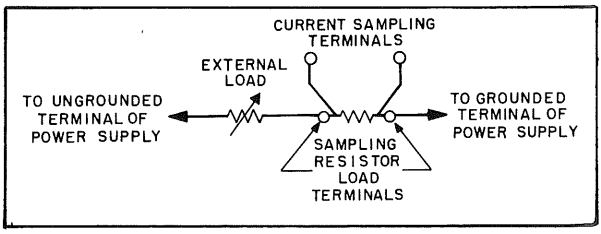

Figure 5-2. Output Current Measurement Technique

5-10 When using an oscilloscope, ground one terminal of the power supply and then ground the case

of the oscilloscope to this same point. Make certain that the case is not also grounded by some other means (power line). Connect both oscilloscope input leads to the power supply ground terminal and check that the oscilloscope is not exhibiting a ripple or transient due to ground loops, pick-up, or other means.

5-11 TEST EQUIPMENT REQUIRED

5-12 Table 5-1 lists the test equipment required to perform the various procedures described in this Section.

Table 5-1. Test Equipment Required

TYPE	REQUIRED CHARACTERISTICS	USE	RECOMMENDED MODEL
Differential Voltmeter	Sensitivity: 1mV full scale (min.). Input impedance: 10 megohms (min.).	Measure DC voltages; calibration procedures	hp 3420 (See Note)
Variable Voltage	Range: 90-130 volts. Equipped with voltmeter accurate within 1 volt.	Vary AC input	------
AC Voltmeter	Accuracy: 2%. Sensitivity: 1mV full scale deflection (min.).	Measure AC voltages and ripple	hp 403B
Oscilloscope	Sensitivity: 100μV/cm. Differential input.	Display transient response waveforms	hp140A plus 1400A plug-in. 1402A plug-in for spike measurements only.
Oscillator	Range: 5Hz to 600KHz. Accuracy: 2%. Output: 10Vrms.	Impedance checks	hp 200CD
DC Voltmeter	Accuracy: 1%. Input resistance: 20,000 ohms/volt (min.).	Measure DC voltages	hp 412A
Repetitive Load Switch	Rate: 60-400Hz, 2μsec rise and fall time.	Measure transient response	See Figure 5-9.
Resistive Loads	Values: See Paragraph 5-16.	Power supply load resistors	------
Current Sampling Resistor	See R33 in Parts List (Section VI).	Measure current; calibrate meter	------
Resistor	1KΩ ±1%, 2 watt non-inductive.	Measure impedance	------
Resistor	100 ohms, ±5%, 10 watt.	Measure impedance	------
Capacitor	500μf, 50WVdc.	Measure impedance	------

NOTE

A satisfactory substitute for a differential voltmeter is to arrange a reference voltage source and null detector as shown in Figure 5-3. The reference voltage source is adjusted so that the voltage difference between the supply being measured and the reference voltage will have the required resolution for the measurement being made. The voltage difference will be a function of the null detector that is used. Examples of satisfactory null detectors are: hp419A null detector, a dc coupled oscilloscope utilizing differential input, or a 50mv meter movement with a 100 division scale. For the latter, a 2mv change in voltage will result in a meter deflection of four divisions.

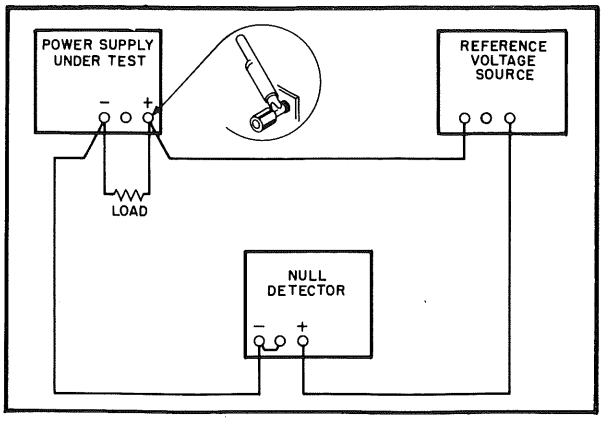

Figure 5-3. Differential Voltmeter Substitute Test Setup

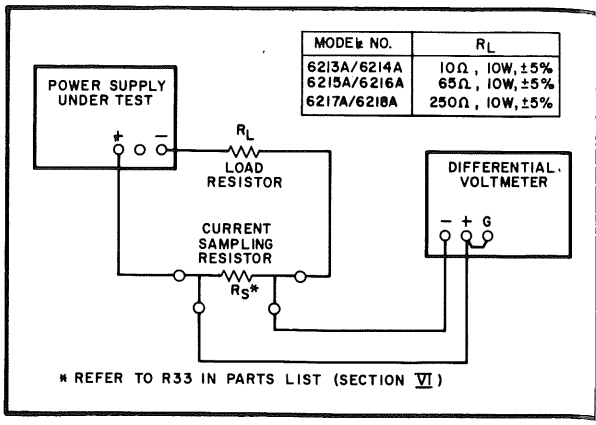

Figure 5-4. Output Current, Test Setup

CAUTION

Care must be exercised when using an electronic null detector in which one input terminal is grounded to avoid ground loops and circulating currents.

5-13 PERFORMANCE TEST

5-14 The following test can be used as an incoming inspection check and appropriate portions of the test can be repeated either to check the operation of the instrument after repairs or for periodic maintenance tests. The tests are performed using a 115-VAC 60 Hz, single phase input power source. If the correct result is not obtained for a particular check, do not adjust any controls; proceed to troubleshooting (Paragraph 5-48).

5-15 RATED OUTPUT AND METER ACCURACY

5-16 Voltage. To check the output voltage, proceed as follows:

a. Connect load resistor (R_L) indicated in Figure 5-4 across the output terminals of supply.

b. Connect differential voltmeter across (+) and (-) terminals of supply observing correct polarity.

c. Set METER SELECTION switch to VOLTS and turn on supply.

d. Adjust VOLTAGE controls until front panel meter indicates exactly the maximum rated output voltage.

e. Differential voltmeter should indicate maximum rated output voltage within ±2%.

5-17 Current. To check the output current, proceed as follows:

a. Connect test setup shown in Figure 5-4.

b. Set METER SELECTION switch to MA position.

c. Turn on supply and adjust VOLTAGE controls until front panel meter indicates maximum rated output current.

d. Differential voltmeter should read as follows:

Model No.	Reading (Vdc)
6213A	1 ±0.03V
6215A	1.2 ±0.036V
6217A	1.2 ±0.036V

5-18 LOAD REGULATION

Definition: The change ΔE_{OUT} in the static value of DC output voltage resulting from a change in load resistance from open circuit to a value which yields maximum rated output current (or vice versa).

5-19 To check the constant voltage load regulation, proceed as follows:

a. Connect test setup as shown in Figure 5-5.

b. Set METER SELECTION switch to MA position.

c. Turn on supply and adjust VOLTAGE controls until front panel meter indicates maximum rated output current.

d. Read and record voltage indicated on differential voltmeter.

e. Disconnect load resistor.

f. Reading on differential voltmeter should not vary from reading recorded in step d by more than 4mV.

5-20 LINE REGULATION

Definition: The change, ΔE_{OUT}, in the static value of DC output voltage resulting from a change in AC input voltage over the specified range from low line (usually 105 volts) to high line (usually 125 volts), or from high line to low line.

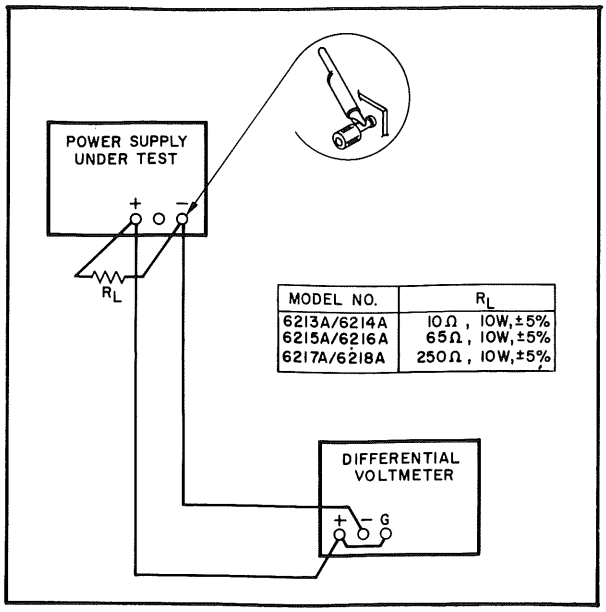

Figure 5-5. Load Regulation, Test Setup

5-21 To test the line regulation, proceed as follows:

a. Connect variable auto transformer between input power source and power supply power input.

b. Connect test setup shown in Figure 5-5.

c. Adjust variable auto transformer for 105 VAC input.

d. Set METER SELECTION switch to VOLTS position.

e. Turn on supply and adjust VOLTAGE controls until front panel meter indicates exactly the maximum rated output voltage.

f. Read and record voltage indicated on differential voltmeter.

g. Adjust variable auto transformer for 125V ac input.

h. Reading on differential voltmeter should not vary from reading recorded in step f by more than 4mv.

5-22 Ripple and Noise.

Definition: The residual ac voltage which is superimposed on the dc output of a regulated power supply. Ripple and noise may be specified and measured in terms of its RMS or (preferably) peak-to-peak value.

Ripple and noise measurement can be made at any input ac line voltage combined with any dc output voltage and load current within rating.

5-23 The amount of ripple and noise that is present on the power supply output is measured either in terms of the RMS or (preferably) peak-to-peak value. The peak-to-peak measurement is particularly important for applications where noise spikes could be detrimental to a sensitive load, such as logic circuitry. The RMS measurement is not an ideal representation of the noise, since fairly high output noise spikes of short duration could be present in the ripple and not appreciably increase the RMS value.

5-24 The technique used to measure high frequency noise or "spikes" on the output of a power supply is more critical than the low frequency ripple and noise measurement technique; therefore the former is discussed separately in Paragraph 5-32.

5-25 Ripple and Noise Measurements. Figure 5-6A shows an incorrect method of measuring p-p ripple. Note that a continuous ground loop exists from the third wire of the input power cord of the supply to the third wire of the input power cord of the oscilloscope via the grounded power supply case, the wire between the negative output terminal of the power supply and the vertical input of the scope, and the grounded scope case. Any ground current circulating in this loop as a result of the difference in potential E_G between the two ground points causes an IR drop which is in series with the scope input. This IR drop, normally having a 60 Hz line frequency fundamental, plus any pickup on the unshielded leads interconnecting the power supply and scope, appears on the face of the CRT. The magnitude of this resulting noise signal can easily be much greater than the true ripple developed between the plus and minus output terminals of the power supply, and can completely invalidate the measurement.

5-26 The same ground current and pickup problems can exist if an RMS voltmeter is substituted in place of the oscilloscope in Figure 5-6. However, the oscilloscope display, unlike the true RMS meter reading, tells the observer immediately whether the fundamental period of the signal displayed is 8.3 milliseconds (1/120 Hz) or 16.7 milliseconds (1/60 Hz). Since the fundamental ripple frequency present on the output of an hp supply is 120 Hz (due to full-wave rectification), an oscilloscope display showing a 120 Hz fundamental component is indicative of a "clean" measurement setup, while the presence of a 60 Hz fundamental usually means that an improved setup will result in a more accurate (and lower) value of measured ripple.

5-27 Figure 5-6B shows a correct method of measuring the output ripple of a constant voltage power supply using a single-ended scope. The ground loop path is broken with a 3 to 2 adapter in series with the power supply's AC line plug. Notice,

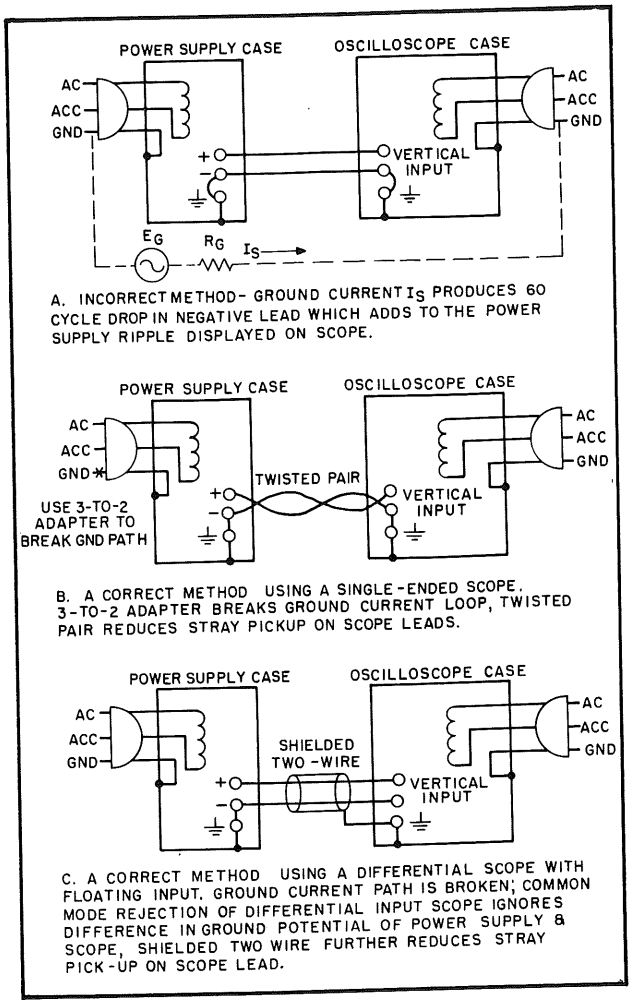

Figure 5-6. Ripple and Noise, Test Setup

however, that the power supply case is still connected to ground via the power supply output terminals, the leads connecting these terminals to the scope terminals, the scope case and the third wire of the power supply cord.

5-28 Either a twisted pair or (preferably) a shielded two-wire cable should be used to connect the output terminals of the power supply to the vertical input terminals of the scope. When using a twisted pair, care must be taken that one of the two wires is connected both to the grounded terminal of the power supply and the grounded input terminal of the oscilloscope. When using shielded two-wire, it is essential for the shield to be connected to ground at one end only so that no ground current will flow through this shield, thus inducing a noise signal in the shielded leads.

5-29 To verify that the oscilloscope is not displaying ripple that is induced in the leads or picked up from the grounds, the (+) scope lead should be shorted to the (-) scope lead at the power supply terminals. The ripple value obtained when the leads are shorted should be subtracted from the actual ripple measurement.

5-30 In most cases, the single-ended scope method of Figure 5-6B will be adequate to eliminate non-real components of ripple and noise so that a satisfactory measurement may be obtained. However, in more stubborn cases, or in measurement situations where it is essential that both the power supply case and the oscilloscope case be connected to ground (e.g. if both are rack-mounted), it may be necessary to use a differential scope with floating input as shown in Figure 5-6C. If desired two single conductor shielded cables may be substituted in place of the shielded two-wire cable with equal success. Because of its common mode rejection, a differential oscilloscope displays only the difference in signal between its two vertical input terminals, thus ignoring the effects of any common mode signal introduced because of the difference in the AC potential between the power supply case and scope case. Before using a differential input scope in this manner, however, it is imperative that the common mode rejection capability of the scope be verified by shorting together its two input leads at the power supply and observing the trace on the CRT. If this trace is a straight line, the scope is properly ignoring any common mode signal present. If this trace is not a straight line, then the scope is not rejecting the ground signal and must be realigned in accordance with the manufacturer's instructions until proper common mode rejection is attained.

5-31 To check the ripple and noise output, proceed as follows:

a. Connect the oscilloscope or RMS voltmeter as shown in Figures 5-6B or 5-6C.

b. Adjust VOLTAGE control until front panel meter indicates maximum rated output voltage.

c. The observed ripple and noise should be less than 200 μVrms and 1mV p-p.

5-32 Noise Spike Measurement. When a high frequency spike measurement is being made, an instrument of sufficient bandwidth must be used; an oscilloscope with a bandwidth of 20 MHz or more is adequate. Measuring noise with an instrument that has insufficient bandwidth may conceal high frequency spikes detrimental to the load.

5-33 The test setups illustrated in Figures 5-6A and 5-6B are generally not acceptable for measuring spikes; a differential oscilloscope is necessary. Furthermore, the measurement concept of Figure 5-6C must be modified if accurate spike measurement is to be achieved:

1. As shown in Figure 5-7, two coax

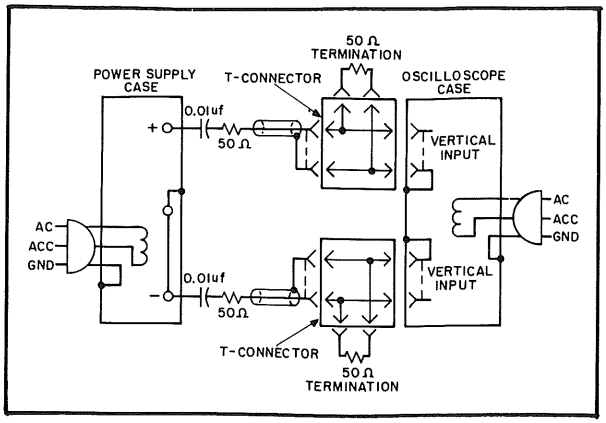

Figure 5-7. Noise Spike Test Setup

cables, must be substituted for the shielded two-wire cable.

2. Impedance matching resistors must be included to eliminate standing waves and cable ringing, and the capacitors must be connected to block the DC current path.

3. The length of the test leads outside the coax is critical and must be kept as short as possible; the blocking capacitor and the impedance matching resistor should be connected directly from the inner conductor of the cable to the power supply terminals.

4. Notice that the shields of the power supply end of the two coax cables are not connected to the power supply ground, since such a connection would give rise to a ground current path through the coax shield, resulting in an erroneous measurement.

5. The measured noise spike values must be doubled, since the impedance matching resistors constitute a 2-to-1 attenuator.

6. The noise spikes observed on the oscilloscope should be less than 0.5mV p-p.

5-34 The circuit of Figure 5-7 can also be used for the normal measurement of low frequency ripple and noise; simply remove the four terminating resistors and the blocking capacitors and substitute a higher gain vertical plug-in in place of the wide-band plug-in required for spike measurements. Notice that with these changes, Figure 5-7 becomes a two-cable version of Figure 5-6C.

5-35 OUTPUT IMPEDANCE

Definition: At any given frequency of load change, $\Delta E_{OUT}/\Delta I_{OUT}$. Strictly speaking the definition applies only for a sinusoidal load disturbance, unless, of course, the measurement is made at zero frequency (DC). The output impedance of an ideal constant voltage power supply would be zero at all frequencies, while the output impedance for an ideal constant current power supply would be infinite at all frequencies.

The output impedance of a power supply is normally not measured, since the measurement of transient recovery time reveals both the static and dynamic output characteristics with just one measurement. The output impedance of a power supply is commonly measured only in those cases where the exact value at a particular frequency is of engineering importance.

5-36 To check the output impedance, proceed as follows:

a. Connect test setup shown in Figure 5-8.

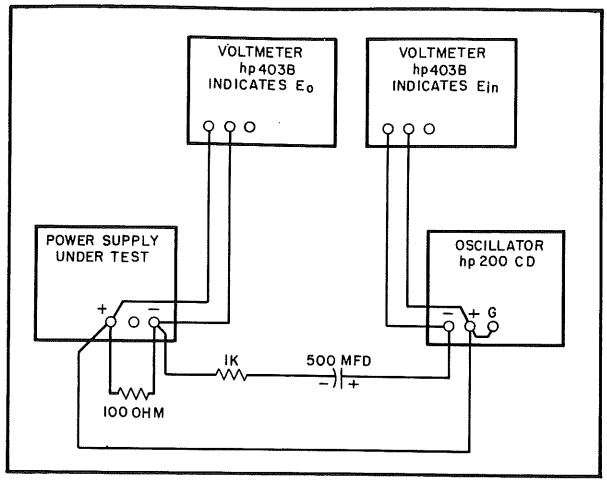

Figure 5-8. Output Impedance, Test Setup

b. Set METER SELECTION switch to VOLTS position.

c. Turn on supply and adjust VOLTAGE controls until front panel meter reads 20 volts.

d. Set AMPLITUDE control on Oscillator to 10 volts (E_{in}), and FREQUENCY control to 100 Hz.

e. Record voltage across output terminals of the power supply (E_o) as indicated on AC voltmeter.

f. Calculate the output impedance by the following formula:

$$Z_{out} = \frac{E_o R}{E_{in} - E_o}$$

E_o = rms voltage across power supply output terminals.

R = 1000

E_{in} = 10 volts

g. The output impedance (Z_{out}) should be less than 0.030 ohms.

h. Using formula of step f, calculate output impedance at frequencies of 50 kHz and 500 kHz. Values should be less than 0.5 ohm and 3.0 ohms, respectively.

5-37 Output Inductance. To check the output inductance, repeat steps a through f at frequencies of 10 kHz, 50 kHz and 100 kHz. Calculate the output inductance (L) using the following formula:

$$L = \frac{X_L}{2\pi f} \text{ (See Note)}$$

The oscillator frequency is equivalent to f in the equation. The output inductance should be less than 20 microhenries.

NOTE

The equation assumes that X_L is much greater than R_{out} and therefore $X_L = Z_{out}$.

5-38 CURRENT LIMIT

5-39 To check the current limiting characteristics of the supply, proceed as follows:

a. Attach the multimeter or a milliameter to the output terminals of the supply. Set the meter for approximately 600 mA. The internal resistance of the meter is low enough to overload the supply so that the output will current limit.

b. Adjust the VOLTAGE controls fully clockwise.

c. The meter should read as follows:

Model 6213A	1300 ± 50mA
6215A	475 ± 10mA
6217A	250 ± 10mA

5-40 TRANSIENT RECOVERY TIME

Definition: The time "X" for output voltage recovery to within "Y" millivolts of the nominal output voltage following a "Z" amp step change in load current — where:
"Y" is specified separately for each model but is generally of the same order as the load regulation specification. The nominal output voltage is defined as the DC level half way between the static output voltage before and after the imposed load change, and
"Z" is the specified load current change, normally equal to the full load current rating of the supply.

5-41 Transient recovery time may be measured at any input line voltage combined with any output voltage and load current within rating.

5-42 Reasonable care must be taken in switching the load resistance on and off. A hand-operated switch in series with the load is not adequate, since the resulting one-shot displays are difficult to observe on most oscilloscopes, and the arc energy occurring during switching action completely masks the display with a noise burst. Transistor load switching devices are expensive if reasonably rapid load current changes are to be achieved.

5-43 A mercury-wetted relay, as connected in the load switching circuit of Figure 5-9 should be used for loading and unloading the supply. When this load switch is connected to a 60 Hz AC input the mercury-wetted relay will open and close 60 times per second. Adjustment of the 25K control permits adjustment of the duty cycle of the load current switching and reduction in jitter of the oscilloscope display.

5-44 The maximum load ratings listed in Figure 5 must be observed in order to preserve the mercury wetted relay contacts. Switching of larger load currents can be accomplished with mercury pool relay with this technique fast rise times can still be obtained, but the large inertia of mercury pool relay limits the maximum repetition rate of load switch and makes the clear display of the transient recovery characteristic on an oscilloscope more difficult.

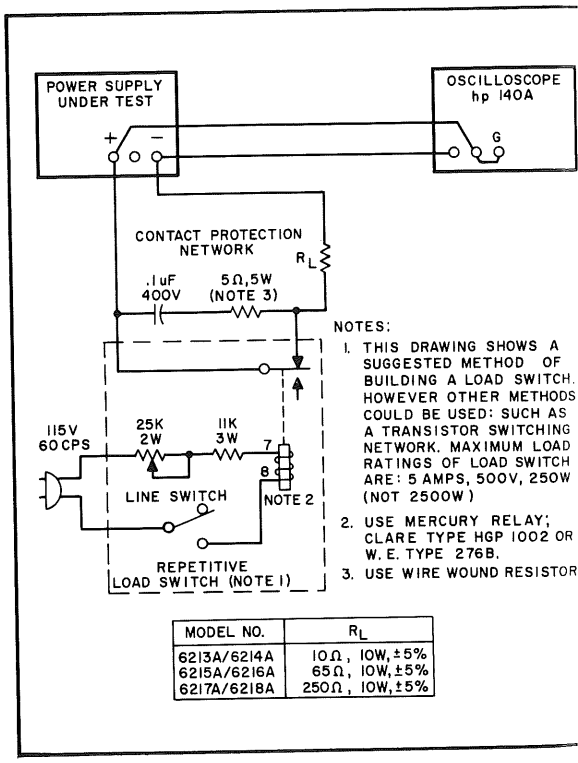

MODEL NO.	R_L
6213A/6214A	10Ω, 10W, ±5%
6215A/6216A	65Ω, 10W, ±5%
6217A/6218A	250Ω, 10W, ±5%

Figure 5-9. Transient Recovery Time, Test Set

5-45 To check the transient recovery time, proceed as follows:

a. Connect test setup shown in Figure 5-9.

b. Set METER SELECTION switch to mA.

c. Turn on supply and adjust voltage controls until front panel meter indicates exactly the maximum rated output current.

d. Close the line switch on the repetitive load switch setup.

e. Set the oscilloscope for internal sync and lock on either the positive or negative load transient spike.

f. Set the vertical input of the oscilloscope for ac coupling so that small dc level changes in the output voltage of the power supply will not cause the display to shift.

g. Adjust the vertical centering on the scope so that the tail ends of the no load and full load waveforms are symmetrically displaced about the horizontal center line of the oscilloscope. This center line now represents the nominal output voltage defined in the specification.

h. Adjust the horizontal positioning control so that the trace starts at a point coincident with a major graticule division. This point is then representative of time zero.

i. Increase the sweep rate so that a single transient spike can be examined in detail.

j. Adjust the sync controls separately for the positive and negative going transients so that not only the recovery waveshape but also as much as possible of the rise time of the transient is displayed.

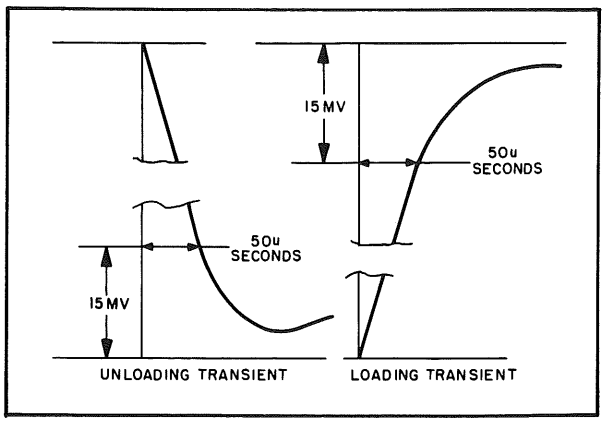

Figure 5-10. Transient Recovery Time, Waveforms

k. Starting from the major graticule division representative of time zero, count to the right 50 μsec and vertically 10 mV. Recovery should be within these tolerances as illustrated in Figure 5-10

5-46 TROUBLESHOOTING

5-47 Components within Hewlett-Packard power supplies are conservatively operated to provide maximum reliability. In spite of this, parts within a supply may fail. Usually the instrument must be immediately repaired with a minimum of "down time" and a systematic approach as outlined in succeeding paragraphs can greatly simplify and speed up the repair.

5-48 TROUBLE ANALYSIS

5-49 General. Before attempting to troubleshoot this instrument, ensure that the fault is with the instrument and not with an associated circuit. The performance test (Paragraph 5-13) enables this to be determined without having to remove the instrument from the cabinet.

5-50 Once it is determined that the power supply is at fault, check for obvious troubles such as open fuse, a defective power cable, or an input power failure. Next, remove the top and bottom covers as described in Paragraph 5-3 and inspect for open connections, charred components, etc. If the trouble source cannot be detected by visual inspection, follow the detailed procedure outlined in succeeding paragraphs. Once the defective component has been located (by means of visual inspection or trouble analysis) correct it and re-conduct the performance test. If a component is replaced, refer to the repair and replacement and adjustment and calibration paragraphs in this section.

5-51 A good understanding of the principles of operation is a helpful aid in troubleshooting, and it is recommended that the reader review Section IV of the manual before attempting to troubleshoot the unit in detail. Once the principles of operation are understood, logical application of this knowledge used in conjunction with the normal voltage readings shown on the schematic and the additional procedures given in the following paragraphs should suffice to isolate a fault to a component or small group of components. The normal voltages shown on the schematic are positioned adjacent to the applicable test points (identified by encircled numbers on the schematic and printed wiring boards).

5-52 Table 5-2 includes the symptoms and probable causes of many possible troubles. If either high or low output voltage is a symptom, there are two methods of isolating the fault. The first is a simplified procedure that involves only measuring voltages; the second is a more thorough approach requiring that transistor stages be opened or shorted. Both methods are described as follows:

1. First, the reference, bias, and filtered dc voltages as given in Table 5-3 should be checked. Then the voltage levels at critical points (base and collector) in the feedback loop should be measured and compared to the normal voltages given on the overall schematic diagram at the rear of the manual. This method of troubleshooting a feedback loop is not always conclusive; a better method is described in (2).

2. First, measure the reference, bias, and filtered dc voltages as given in Table 5-3. Then, drive each stage in the feedback loop into conduction or cutoff by either shorting or opening the previous stage as indicated in Tables 5-4 or 5-5.

Table 5-2. Common Troubles

SYMPTOM	PROBABLE CAUSE
Low output or no output voltage	Refer to Table 5-3, then 5-4.
High output voltage	Refer to Table 5-3, then 5-5.
High ripple	a. Check operating setup for ground, refer to Paragraph 5-22. b. If output floating, connect 1μf capacitor between output and ground. c. Check for excessive internal ripple; refer to Table 5-3. d. Ensure that supply is not in current limit operation under loaded conditions. To prevent this condition, increase load resistance so that output current does not exceed maximum rated output. e. Check for low voltage across C5 or C9.
Poor line regulation	a. Improper measuring technique; refer to Paragraph 5-6. b. Check reference circuit voltages, Table 5-3.
Poor load regulation (Constant Voltage)	a. Improper measuring technique; refer to Paragraph 5-6. b. Check reference circuit voltages (Table 5-3). c. Ensure that supply is not in current limit operation under loaded conditions. To prevent this condition, ensure that output current does not exceed maximum rated output.
Oscillates	a. Check C3 and R17.
Poor stability (Constant Voltage)	a. Check +6.2Vdc reference voltage (Table 5-3). b. Noisy programming resistor R10 or R11. c. CR1, CR2 leaky. d. Check R1, R12, and C1 for noise or drift. e. Stage Q1/Q2 defective.
Poor transient recovery	a. Check R17 and C3.

Table 5-3. Reference, Bias, and Filtered DC Troubleshooting

METER COMMON	METER POSITIVE	NORMAL VDC	NORMAL RIPPLE (P-P)	PROBABLE CAUSE
C5(-)	C5(+)	+48 ± 4.8V	2V	T1, C10, CR10, CR11, C5
+S	7	+12.4 ± 0.6V	0.5mV	VR4, Q11, VR7
+S	8	+6.2 ± 0.3V	0.2mV	VR6, R25
9	+S	+6.2 ± 0.3V	0.1mV	VR3, Q9, R30, VR8
11	+S	+12.4 ± 0.6V	4.5mV	VR1, R27, R30
-OUT	6	22 ± 2.2V (6213A) 44 ± 4.5V (6215A) 78 ± 7.8V (6217A)	3V 400mV 500mV	CR15, CR16, C9, R32, T1

Table 5-4. Low Output Voltage Troubleshooting

STEP	ACTION	RESPONSE	PROBABLE CAUSE
1	Turn the VOLTAGE control fully clockwise and disconnect the load		
2	To eliminate the current limit circuit as a cause of the malfunction, remove CR4 cathode or anode lead	a. Output increases b. Output remains low	a. CR4 or Q3 defective b. Reconnect CR4 and proceed to Step 3
3	Check conduction of Q7 by connecting a jumper between Q5 emitter and base	a. Output remains low b. Output increases	a. Q7, CR7, or associated parts defective b. Remove jumper and proceed to Step 4
4	Check turnoff of Q5 by shorting Q4 emitter to collector	a. Output remains low b. Output increases	a. Q5, R19, R20 defective b. Remove jumper and proceed to Step 5
5	Check conduction of Q4 by shorting Q1 emitter to collector	a. Output remains low b. Output increases	a. Stage Q4 defective b. Stage Q1/Q2 defective. Check R10, R11, C1 for short and R12 for open.

Table 5-5. High Output Voltage Troubleshooting

STEP	ACTION	RESPONSE	PROBABLE CAUSE
1	Turn the VOLTAGE control to approximately mid-range and disconnect the load. If the output voltage should rise to an excessive value during the following procedures, the VOLTAGE control could be damaged if it is turned fully CCW.		
2	Check turnoff of Q7 by shorting Q5 emitter to collector	a. Output remains high b. Output decreases	a. Q7, CR7, R20 defective. b. Remove short across Q5 and proceed to Step 3.
	Check conduction of Q5 by removing Q4 collector lead	a. Output remains high b. Output decreases	a. Stage Q5 defective. b. Replace Q4 collector lead and proceed to Step 4.
4	Check turnoff of Q4 by shorting Q1 emitter to collector	a. Output remains high b. Output decreases	a. Stage Q4 defective b. Stage Q1/Q2 defective. Check R10, R11 for open and R12 for short.

5-53 REPAIR AND REPLACEMENT

5-54 Before servicing a printed wiring board, refer to Figure 5-11. Section VI of this manual contains a tabular list of the instruments replaceable parts. Before replacing a semiconductor device, refer to Table 5-6 which lists the special characteristics of selected semiconductors. If the device to be replaced is not listed in Table 5-6, the standard manufacturers part number listed in Section VI is applicable.

Table 5-6. Selected Semiconductor Characteristics

REFERENCE DESIGNATOR	CHARACTERISTICS	hp PART NO.	SUGGESTED REPLACEMENT
Q7	Power NPN Silicon h_{fe} = 35 min. @ I = 4 Ampere V_{CE} = 4 Volts.	1854-0225	2N3055 R.C.A

Excessive heat or pressure can lift the copper strip from the board. Avoid damage by using a low power soldering iron (50 watts maximum) and following these instructions. Copper that lifts off the board should be cemented in place with a quick drying acetate base cement having good electrical insulating properties.

A break in the copper should be repaired by soldering a short length of tinned copper wire across the break.

Use only high quality rosin core solder when repairing etched circuit boards. NEVER USE PASTE FLUX. After soldering, clean off any excess flux and coat the repaired area with a high quality electrical varnish or lacquer.

When replacing components with multiple mounting pins such as tube sockets, electrolytic capacitors, and potentiometers, it will be necessary to lift each pin slightly, working around the components several times until it is free.

WARNING: If the specific instructions outlined in the steps below regarding etched circuit boards without eyelets are not followed, extensive damage to the etched circuit board will result.

1. Apply heat sparingly to lead of component to be replaced. If lead of component passes through an eyelet in the circuit board, apply heat on component side of board. If lead of component does not pass through an eyelet, apply heat to conductor side of board.

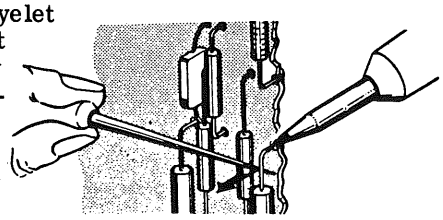

2. Reheat solder in vacant eyelet and quickly insert a small awl to clean inside of hole. If hole does not have an eyelet, insert awl or a #57 drill from conductor side of board.

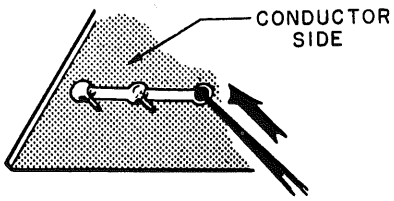

3. Bend clean tinned lead on new part and carefully insert through eyelets or holes in board.

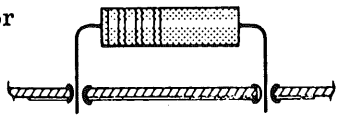

4. Hold part against board (avoid overheating) and solder leads. Apply heat to component leads on correct side of board as explained in step 1.

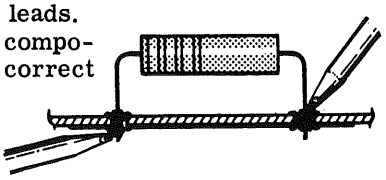

In the event that either the circuit board has been damaged or the conventional method is impractical, use method shown below. This is especially applicable for circuit boards without eyelets.

1. Clip lead as shown below.

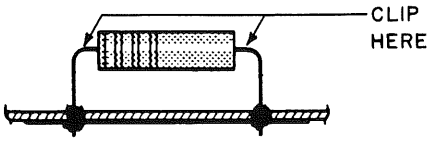

2. Bend protruding leads upward. Bend lead of new component around protruding lead. Apply solder using a pair of long nose pliers as a heat sink.

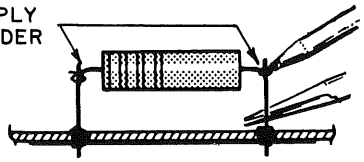

This procedure is used in the field only as an alternate means of repair. It is not used within the factory.

Figure 5-11. Servicing Printed Wiring Boards

Table 5-7. Calibration Adjustment Summary

Adjustment or Calibration	Paragraph	Control Device
Meter Zero	5-57	Pointer
Ammeter Tracking	5-59	R72
"Zero" Volt Output	5-61	R6 or R8
Current Limit	5-63	R81

5-55 ADJUSTMENT AND CALIBRATION

5-56 Adjustment and calibration may be required after performance testing, troubleshooting, or repair and replacement. Perform only those adjustments that affect the operation of the faulty circuit and no others. Table 5-7 summarizes the adjustments and calibrations contained in the following paragraphs.

5-57 METER MECHANICAL ZERO

5-58 Proceed as follows to zero meter:

a. Turn off instrument (after it has reached normal operating temperature) and allow 30 seconds for all capacitors to discharge.

b. Insert sharp pointed object (pen point or awl) into the small hole at top of round black plastic disc located directly below meter face.

c. Rotate plastic disc clockwise (cw) until meter reads zero, then rotate ccw slightly in order to free adjustment screw from meter suspension. If pointer moves, repeat steps b and c.

5-59 METER CALIBRATION

5-60 To calibrate the ammeter, proceed as follows:

a. Connect test setup as shown on Figure 5-4.

b. Set METER SELECTION switch to mA position.

c. Turn on supply and adjust VOLTAGE controls so that differential voltmeter indicates exactly 1.2 volts for 6215A and 6217A, and 1 Volt for 6213A.

d. Adjust R47 until front panel ammeter indicates:

6213A	1A
6215A	400mA
6217A	200mA

5-61 ZERO VOLTS OUTPUT ADJUSTMENT

5-62 To calibrate the output voltage so that there is zero volts output when the VOLTAGE controls a fully ccw, proceed as follows:

a. Connect differential voltmeter between (+) and (-) output terminals.

b. Short out voltage controls by connecting jumper across R10 and R11.

c. Turn on supply and observe reading on differential voltmeter.

d. If it is more positive than 0 volts, shun resistor R5 with a decade resistance box.

e. Adjust decade resistance until differential voltmeter reads zero, then shunt R5 with resistance value equal to that of the decade resistance.

f. If reading of step c was more negative than 0 volts, shunt resistor R7 with the decade re sistance.

g. Adust decade resistance until differential voltmeter reads zero, then shunt R7 with resistance value equal to that of the decade resistance.

5-63 OUTPUT CURRENT LIMIT ADJUSTMENT

5-64 To adjust the limiting level of the output current, proceed as follows:

a. Attach the multimeter or a milliammeter to the output terminals of the supply. Set the meter for approximately 600 mA. The internal resistance of the meter is low enough to overload the supply so that the output will current limit.

b. Adjust the VOLTAGE controls fully clockwise.

c. Adjust current limit control R50 for the following indications on the multimeter:

Model	Current Limit
6213A	1300mA
6215A	475mA
6217A	250mA

SECTION VI
REPLACEABLE PARTS

6-1 INTRODUCTION

6-2 This section contains information for ordering replacement parts.

6-3 Table 6-4 lists parts in alpha-numerical order of the reference designators and provides the following information:

a. Reference Designators. For abbreviations, refer to Table 6-1.

b. Description. Refer to Table 6-2 for abbreviations.

c. Total Quantity (TQ) used in the instrument; given only first time the part number is listed.

d. Manufacturer's part number.

e. Manufacturer's code number. Refer to Table 6-3 for manufacturer's name and address.

f. ⓗⓟ Part Number.

g. Recommended spare parts quantity (RS) for complete maintenance of one instrument during one year of isolated service.

h. Parts not identified by a reference designator are listed at the end of Table 6-4 under Miscellaneous.

6-4 ORDERING INFORMATION

6-5 To order a replacement part, address order or inquiry to your local Hewlett-Packard sales office (see lists at rear of this manual for addresses).

6-6 Specify the following information for each part:

a. Model and complete serial number of instrument.

b. Hewlett-Packard part number.

c. Circuit reference designator.

d. Description.

6-7 To order a part not listed in Table 6-4, give a complete description of the part and include its function and location.

Table 6-1. Reference Designators

A = assembly	CR = diode
B = motor	DS = device, signaling (lamp)
C = capacitor	

Table 6-1. Reference Designators (Continued)

E = misc. electronic part	RT = thermistor
F = fuse	S = switch
J = jack	T = transformer
K = relay	V = vacuum tube, neon bulb, photocell, etc.
L = inductor	
M = meter	X = socket
P = plug	XF = fuseholder
Q = transistor	XDS = lampholder
R = resistor	Z = network

Table 6-2. Description Abbreviations

a = amperes	obd = order by description
c = carbon	p = peak
cer = ceramic	pc = printed circuit board
coef = coefficient	pf = picofarads = 10^{-12} farads
com = common	pp = peak-to-peak
comp = composition	ppm = parts per million
conn = connection	pos = position(s)
crt = cathode-ray tube	poly = polystyrene
dep = deposited	pot = potentiometer
elect = electrolytic	prv = peak reverse voltage
encap = encapsulated	rect = rectifier
f = farads	rot = rotary
fxd = fixed	rms = root-mean-square
GE = germanium	s-b = slow-blow
grd = ground(ed)	sect = section(s)
h = henries	Si = silicon
Hg = mercury	sil = silver
impg = impregnated	sl = slide
ins = insulation(ed)	td = time delay
K = kilo = 1000	TiO_2 = titanium dioxide
lin = linear taper	tog = toggle
log = logarithmic taper	tol = tolerance
mA = milli = 10^{-3}	trim = trimmer
M = megohms	twt = traveling wave tube
ma = milliamperes	var = variable
μ = micro = 10^{-6}	w/ = with
mfr = manufacturer	W = watts
mtg = mounting	w/o = without
my = mylar	cmo = cabinet mount only
NC = normally closed	
Ne = neon	
NO = normally open	

Table 6-3. Code List of Manufacturers

CODE NO.	MANUFACTURER	ADDRESS
00629	EBY Sales Co.	New York, N.Y.
00656	Aerovox Corp.	New Bedford, Mass.
00853	Sangamo Electric Company, Ordill Division (Capacitors)	Marion, Ill.
01121	Allen Bradley Co.	Milwaukee, Wis.
01255	Litton Industries, Inc.	Beverly Hills, Calif.
01281	TRW Semiconductors, Inc.	Lawndale, Calif.
01295	Texas Instruments, Inc. Semiconductor-Components Division	Dallas, Texas
01686	RCL Electronics, Inc.	Manchester, N.H.
01930	Amerock Corp.	Rockford, Ill.
02114	Ferroxcube Corp. of America	Saugerties, N.Y.
02606	Fenwal Laboratories	Morton Grove, Ill.
02660	Amphenol-Borg Electronics Corp.	Broadview, Ill.
02735	Radio Corp. of America, Commercial Receiving Tube and Semiconductor Div.	Somerville, N.J.
03508	G.E. Semiconductor Products Dept.	Syracuse, N.Y.
03797	Eldema Corp.	Compton, Calif.
03877	Transitron Electronic Corp.	Wakefield, Mass.
03888	Pyrofilm Resistor Co.	Cedar Knolls, N.J.
04009	Arrow, Hart and Hegeman Electric Co.	Hartford, Conn.
04072	ADC Electronics, Inc.	Harbor City, Calif.
04213	Caddell-Burns Mfg. Co. Inc.	Mineola, N.Y.
04404	Dymec Division of Hewlett-Packard Co.	Palo Alto, Calif.
04713	Motorola, Inc., Semiconductor Products Division	Phoenix, Arizona
05277	Westinghouse Electric Corp. Semi-Conductor Dept.	Youngwood, Pa.
05347	Ultronix, Inc.	Grand Junction, Colo.
06486	North American Electronics, Inc.	Lynn, Mass.
06540	Amathom Electronic Hardware Co., Inc.	New Rochelle, N.Y.
06555	Beede Electrical Instrument Co., Inc.	Penacook, N.H.
06666	General Devices Co., Inc.	Indianapolis, Ind.
06751	Nuclear Corp. of America, Inc., U.S. Semcor Div.	Phoenix, Arizona
06812	Torrington Mfg. Co., West Div.	Van Nuys, Calif.
07137	Transistor Electronics Corp.	Minneapolis, Minn.
07138	Westinghouse Electric Corp. Electronic Tube Div.	Elmira, N.Y.
07263	Fairchild Semiconductor Div. of Fairchild Camera and Instrument Corp.	Mountain View, Calif.
07387	Birtcher Corp., The	Los Angeles, Calif.
07397	Sylvania Electric Products Inc. Mountain View Operations of Sylvania Electronic Systems	Mountain View, Calif.
07716	International Resistance Co.	Burlington, Iowa
07910	Continental Device Corp.	Hawthorne, Calif.
07933	Raytheon Mfg. Co., Semiconductor Div.	Mountain View, Calif.
08530	Reliance Mica Corp.	Brooklyn, N.Y.
08717	Sloan Company	Sun Valley, Calif.
08730	Vemaline Products Co.	Franklin Lakes, N.J.
08863	Nylomatic Corp.	Morrisville, Pa.
09182	Hewlett-Packard Co., Harrison Division	Berkeley Heights, N.J.
09353	C & K Components	Newton, Mass.
11236	CTS of Berne, Inc.	Berne, Ind.
11237	Chicago Telephone of California, Inc.	So. Pasadena, Calif.
11711	General Instrument Corp., Semiconductor Prod. Group, Rectifier Div.	Newark, N.J.
12136	Philadelphia Handle Co., Inc.	Camden, N.J.
12697	Clarostat Mfg. Co.	Dover, N.H.
14493	Hewlett-Packard Co., Loveland Division	Loveland, Colo.
14655	Cornell-Dubilier Elec. Corp.	Newark, N.J.
14936	General Instrument Corp., Semiconductor Prod. Group, Semiconductor Div.	Hicksville, N.Y.
15909	Daven Div. of Thos. Edison Industries, McGraw Edison Co.	Livingston, N.J.
16299	Corning Glass Works, Electronic Components Div.	Raleigh, N.C.
16758	Delco Radio Div. of General Motors Corp.	Kokomo, Ind.
17545	Atlantic Semiconductors, Inc.	Asbury Park, N.J.

Table 6-3. Code List of Manufacturers (Continued)

CODE NO.	MANUFACTURER	ADDRESS
19315	The Bendix Corp., Eclipse Pioneer Div.	Teterboro, N.J.
19701	Electra Mfg. Co.	Independence, Kan.
21520	Fansteel Metallurgical Corp.	No. Chicago, Ill.
22229	Union Carbide Corp., Linde Div., Kemet Dept.	Mountain View, Calif.
22767	ITT Semiconductors, A Division of International Telephone & Telegraph Corp.	Palo Alto, Calif.
24446	General Electric Co.	Schenectady, N.Y.
24455	General Electric Co., Lamp Division	Nela Park, Cleveland, Ohio
24655	General Radio Co.	West Concord, Mass.
28480	Hewlett-Packard Co.	Palo Alto, Calif.
28520	Heyman Mfg. Co.	Kenilworth, N.J.
33173	G. E., Tube Dept.	Owensboro, Ky.
35434	Lectrohm, Inc.	Chicago, Ill.
37942	P.R. Mallory & Co., Inc.	Indianapolis, Ind.
42190	Muter Co.	Chicago, Ill.
44655	Ohmite Manufacturing Co.	Skokie, Ill.
47904	Polaroid Corporation	Cambridge, Mass.
49956	Raytheon Mfg. Co., Microwave and Power Tube Div.	Waltham, Mass.
55026	Simpson Electric Co.	Chicago, Ill.
56289	Sprague Electric Co.	North Adams, Mass.
58474	Superior Electric Co.	Bristol, Conn.
61637	Union Carbide Corp.	New York, N.Y.
63743	Ward-Leonard Electric Co.	Mt. Vernon, N.Y.
70563	Amperite Co., Inc.	Union City, N.J.
70903	Belden Mfg. Co.	Chicago, Ill.
71218	Bud Radio, Inc.	Willoughby, Ohio
71400	Bussmann Mfg. Div. of McGraw-Edison Co.	St. Louis, Mo.
71450	CTS Corporation	Elkhart, Ind.
71468	I.T.T. Cannon Electric Inc.	Los Angeles, Calif
71590	Centralab Div. of Globe Union, Inc.	Milwaukee, Wis.
71700	The Cornish Wire Co.	New York, N.Y.
71744	Chicago Miniature Lamp Works	Chicago, Ill.
71785	Cinch Mfg. Co.	Chicago, Ill.
71984	Dow Corning Corp.	Midland, Mich.
72619	Dialight Corporation	Brooklyn, N.Y.
72699	General Instrument Corp., Capacitor Div.	Newark, N.J.
72765	Drake Mfg. Co.	Chicago, Ill.
72982	Erie Technological Products, Inc.	Erie, Pa.
73138	Helipot Div. of Beckman Instruments, Inc.	Fullerton, Calif.
73293	Hughes Components Division of Hughes Aircraft Co.	Newport Beach, Calif.
73445	Amperex Electronic Co., Div. of North American Phillips Co., Inc.	Hicksville, N.Y.
73506	Bradley Semiconductor Corp.	New Haven, Conn.
73559	Carling Electric, Inc.	Hartford, Conn.
73734	Federal Screw Products, Inc.	Chicago, Ill.
73978	Hardwick Hindle Co., Memcor Components Div.	Huntington, Ind.
74193	Heinemann Electric Co.	Trenton, N.J.
74545	Harvey Hubbel, Inc.	Bridgeport, Conn.
74868	FXR Div. of Amphenol-Borg Electronics Corp.	Danbury, Conn.
75042	International Resistance Co.	Philadelphia, Pa.
75183	Howard B. Jones Div., of Cinch Mfg. Corp. (Use 71785)	New York, N.Y.
75382	Kulka Electric Corp.	Mt. Vernon, N.Y.
75915	Littlefuse, Inc.	Des Plaines, Ill.
76493	J. W. Miller Co.	Los Angeles, Calif.
76854	Oak Manufacturing Co.	Crystal Lake, Ill.
77068	Bendix Corp., Bendix-Pacific Div.	No. Hollywood, Calif.
77221	Phaostron Instrument and Electronic Co.	South Pasadena, Calif.
77252	Philadelphia Steel and Wire Corp.	Philadelphia, Pa.
77342	American Machine and Foundry, Potter and Brumfield Div.	Princeton, Ind.
77630	TRW Electronics, Components Div.	Camden, N.J.
77764	Resistance Products Co.	Harrisburg, Pa.
78189	Shakeproof Div. of Illinois Tool Works	Elgin, Ill.
78488	Stackpole Carbon Co.	St. Marys, Pa.
78526	Stanwyck Winding Co., Inc.	Newburgh, N.Y.
78553	Tinnerman Products, Inc.	Cleveland, Ohio
79307	Whitehead Metal Products Co., Inc.	New York, N.Y.
79727	Continental-Wirt Electronics Corp.	Philadelphia, Pa.
80031	Mepco Div. of Sessions Clock Co.	Morristown, N.J.
80294	Bourns, Inc.	Riverside, Calif.

Table 6-3. Code List of Manufacturers (Continued)

CODE NO.	MANUFACTURER	ADDRESS
81042	Howard Industries, Inc.	Racine, Wis.
81483	International Rectifier Corp.	El Segundo, Calif.
81751	Columbus Electronics Corp.	Yonkers, N.Y.
82099	Goodyear Sundries & Mechanical Co., Inc.	New York, N.Y.
82219	Sylvania Electric Products, Inc., Electronic Tube Division	Emporium, Pa.
82389	Switchcraft, Inc.	Chicago, Ill.
82647	Metals and Controls, Inc., Spencer Products	Attleboro, Mass.
82866	Research Products Corp.	Madison, Wis.
82877	Rotron Mfg. Co., Inc.	Woodstock, N.Y.
82893	Vector Electronic Co.	Glendale, Calif.
83058	Carr Fastener Co.	Cambridge, Mass.
83186	Victory Engineering Corp.	Springfield, N.J.
83298	Bendix Corp., Red Bank Div.	Eatontown, N.J.
83330	Herman H. Smith, Inc.	Brooklyn, N.Y.
83385	Central Screw Co.	Chicago, Ill.
83501	Gavitt Wire and Cable Co., Div. of Amerace Corp.	Brookfield, Mass.
83508	Grant Pulley and Hardware Co.	West Nyack, N.Y.
83594	Burroughs Corp., Electronic Components Div.	Plainfield, N.J.
83877	Yardeny Laboratories, Inc.	New York, N.Y.
84171	Arco Electronics, Inc.	Great Neck, N.Y.
84411	TRW Capacitor Div.	Ogallala, Neb.
86684	Radio Corporation of America, Electronic Components & Devices Div.	Harrison, N.J.
87034	Marco Industries Co.	Anaheim, Calif.
87216	Philco Corp. (Lansdale Div.)	Lansdale, Pa.
87585	Stockwell Rubber Co., Inc.	Philadelphia, Pa.
87929	B.M. Tower Co., Inc.	Bridgeport, Conn.
88140	Cutler-Hammer, Inc.	Lincoln, Ill.
89473	General Electric Distributing Corp.	Schenectady, N.Y.
91345	Miller Dial and Nameplate Co.	El Monte, Calif.
91637	Dale Electronics, Inc.	Columbus, Neb.
91662	Elco Corp.	Willow Grove, Pa.
91929	Honeywell, Inc., Micro Switch Div.	Freeport, Ill.
93332	Sylvania Electric Prod., Inc., Semiconductor Prod. Div.	Woburn, Mass.
93410	Stevens Mfg. Co., Inc.	Mansfield, Ohio
94144	Raytheon Co., Components Div., Industrial Components Operation	Quincy, Mass.
94154	Tung-Sol Electric, Inc.	Newark, N.J.
94310	Tru-Ohm Products, Memcor Components Div.	Huntington, Ind.
95263	Leecraft Mfg. Co., Inc.	Long Island City, N.Y.
95354	Methode Mfg. Co.	Chicago, Ill.
96791	Amphenol Controls Div. of Amphenol-Borg Electronics Corp.	Janesville, Wis.
98291	Sealectro Corp.	Mamaroneck, N.Y.
98978	International Electronic Research Corp.	Burbank, Calif.
99934	Renbrandt, Inc.	Boston, Mass.

THE FOLLOWING H-P VENDORS HAVE NO NUMBERS ASSIGNED IN THE LATEST SUPPLEMENT TO THE FEDERAL SUPPLY CODE FOR MANUFACTURERS HANDBOOK.

0000	Cooltron	Oakland, Calif.
00000	Plastic Ware Co.	Brooklyn, N.Y.

Table 6-4. Replaceable Parts

REF. DESIG.	DESCRIPTION	TQ	MFR. PART NO.	MFR. CODE	ⓗⓟ PART NO.	RS
C1	fxd, elect. 5μf 65Vdc	1		09182	0180-1836	1
C2,4,6-8, 12,13	NOT ASSIGNED	-	-	-	-	-
C3	fxd, film .0022μf 200Vdc	1	192P22292	56289	0160-0154	1
C5	fxd, elect. 100μf 50Vdc	1		09182	0180-1852	1
C9	fxd, elect. 490μf 85Vdc	1		09182	0180-1888	1
C10-C12	fxd, ceramic .02μf 600Vdc	3	Z5U-203Z	72982	0150-0024	1
C14	fxd, elect. 100μf 65Vdc	1		09182	0180-1853	1
CR1,2	Rect. Si. 250mA 200prv	3	1N485B	93332	1901-0033	3
CR3,5,6,8, 9,12	NOT ASSIGNED	-	-	-	-	-
CR4	Rect. Si. 250mA 200prv		1N485B	93332	1901-0033	
CR7,10,11	Rect. Si. 500mA 200prv	6	1N3253	02735	1901-0389	6
CR13	Stabistor 2.4V @ 100mA	1		09182	1901-0464	1
CR14-CR16	Rect. Si. 500mA 200prv		1N3253	02735	1901-0389	
DS1	Lamp, Neon, Glow	1	A1C	03508	2140-0047	1
F1	Fuse Cartridge .5A 250V 3AG	1	312.005	75915	2110-0012	5
Q1-Q3	SS NPN Si.	3	2N3391	03508	1854-0071	3
Q4	SS PNP Si.	2	2N2907	03508	1853-0099	2
Q5	SS PNP Si.	1	40362	02735	1853-0041	1
Q6,8,10	NOT ASSIGNED	-	-	-	-	-
Q7	Power NPN Si.	1		09182	1854-0225	1
Q9	SS NPN Si.	1	2N3417	03508	1854-0087	1
Q11	SS PNP Si.		2N2907	03508	1853-0099	
R1	fxd, ww 1KΩ ±5% 3W	1	242E1025	56289	0813-0001	1
R2	fxd, met. film 6.2KΩ ±1% 1/8W	1	Type CEA T-O	07716	0698-5087	1
R3,4	fxd, met. film 20KΩ ±1% 1/8W	2	Type CEA T-O	07716	0757-0049	1
R5	fxd, comp 150KΩ ±5% ½ W	1	EB-1545	01121	0686-1545	1
R6	fxd, met. film 1.5KΩ ±1% 1/8W	1	Type CEA T-O	07716	0757-0427	1
R7-9,13,15, 22,23,29, 34,39	NOT ASSIGNED	-	-	-	-	-
R10	var. ww 50Ω ±5%	1		09182	2100-1858	1
R11	var. ww 5KΩ ±5%	1		09182	2100-1853	1
R12	fxd, ww 1.2KΩ ±5% 3W	1	242E1225	56289	0811-1208	1
R14	fxd, comp 24Ω ±5% ½ W	1	EB-2405	01121	0686-2405	1
R16	fxd, comp 2.2KΩ ±5% ½ W	1	EB-2225	01121	0686-2225	1
R17	fxd, comp 4.7KΩ ±5% ½ W	1	EB-4725	01121	0686-4725	1
R18	fxd, comp 6.2KΩ ±5% ½ W	1	EB-6225	01121	0686-6225	1
R19	fxd, comp 1KΩ ±5% ½ W	1	EB-1025	01121	0686-1025	1
R20	fxd, met. ox. 2KΩ ±5% 2W	1	Type C42S	16299	0764-0025	1
R21	fxd, comp 240Ω ±5% ½ W	1	EB-2415	01121	0686-2415	1
R24	fxd, comp 3.6KΩ ±5% 1W	1	GB-3625	01121	0689-3625	1
R25	fxd, comp 510Ω ±5% ½ W	1	EB-5115	01121	0686-5115	1
R26	fxd, comp 180Ω ±5% ½ W	1	EB-1815	01121	0686-1815	1
R27	fxd, comp 820Ω ±5% ½ W	1	EB-8215	01121	0686-8215	1
R28	fxd, comp 680Ω ±5% ½ W	1	EB-6815	01121	0686-6815	1
R30	fxd, comp 1.8KΩ ±5% ½ W	1	EB-1825	01121	0686-1825	1
R31	fxd, comp 750Ω ±5% ½ W	1	EB-7515	01121	0686-7515	1
R32	fxd, met. ox. 3KΩ ±5% 2W	1	Type C42S	16299	0698-3642	1
R33	fxd, ww 3Ω ±0.5% 3W 20ppm	1	Type T-3	01686	0811-1986	1
R35	fxd, met. film 1.3KΩ ±1% ¼W	1	Type CEB T-O	07716	0757-0735	1

REF. DESIG.	DESCRIPTION	TQ	MFR. PART NO.	MFR. CODE	hp PART NO.	R
R36	fxd, comp 56Ω ±5% ½W	1	EB-5605	01121	0686-5605	
R37	fxd, comp 12KΩ ±5% ½W	1	EB-1235	01121	0686-1235	
R38	fxd, met. film 29.9KΩ ±1% ¼W	1	Type CEB T-O	07716	0698-5151	
R40	fxd, comp 47KΩ ±5% ½W	1	EB-4735	01121	0686-4735	
R47	var. ww 250Ω ±20%	1	Type 110-F4	11236	2100-0439	
R50	var. ww 100Ω ±20%	1	Type 110-F4	11236	2100-0281	
S1	Switch, Toggle - Power	1	MST-150D	95146	3101-0163	
S2	Slide Switch, DPDT, ½" knob, Solder Terminal	1	XA-70420	82389	3101-1364	
T1	Power Transformer	1		09182	9100-2182	
VR1	Diode, Zener 12.4V ±5% 400mW	2	1N963B	04713	1902-3185	
VR2	Diode, Zener 4.22V ±5% 400mW	1	1N749	04713	1902-3070	
VR3	Diode, Zener 6.19V ±5% 400mW	2	1N753	04713	1902-0049	
VR4	Diode, Zener 12.4V ±5% 400mW		1N963B	04713	1902-3185	
VR5	NOT ASSIGNED	-	-	-	-	
VR6	Diode, Zener 6.2V ±5% 400mW	1	1N821	06486	1902-0761	
VR7	Diode, Zener 6.19V ±5% 400mW		1N753	04713	1902-0049	
	MISCELLANEOUS					
	P.C. Board (Includes Components)	1		09182	06215-60021	
	Printed Circuit Board (Blank)	1		09182	5020-5722	
	Front Panel Printed Circuit Board (Includes Components)	1		09182	06215-60022	
	Front Panel P.C. Board (Blank)	1		09182	5020-5723	
	Cover, Top	1		09182	4040-0050	
	Cover, Bottom	1		09182	4040-0051	
	Rear Panel Assembly	1		09182	4040-0052	
	Front Panel Assembly (Blank)	1		09182	06215-60001	
	Front Panel Assembly (Includes Components)	1		09182	06215-60002	
	Heat Sink	1		09182	5060-6141	
	5 Way Binding Post (Maroon)	1		09182	1510-0040	
	5 Way Binding Post (Black)	2	DF21C	58474	1510-0039	
	Meter 2¼" DUAL, 0-30V, 0-500mA	1		09182	1120-1137	
	Bezel, Meter, 1/16 Mod.	1		09182	4040-0295	
	Spring, Meter	4		09182	1460-0256	
	Line Cord	1	KH-4096	70903	8120-0050	
	Strain Relief Bushing	1	SR-5P-1	28520	0400-0013	
	Fuseholder Assembly	1	342014	75915	1400-0084	
	Lockwasher, Fuseholder	1	1224-08	78189	2190-0037	
	Neoprene Washer, Fuseholder	1	901-2	75915	1400-0090	
	Nut, Fuseholder	1	903-12	75915	2950-0038	
	Mica Insulator, Transistor	1	734	08530	0340-0174	
	Insulator, Transistor Pin	2		09182	0340-0166	
	Insulator, Transistor Screw	2		09182	0340-0168	
	Knob, ¼ insert pointer, Black	2		09182	0370-0084	
	Lens, DS1	1		09182	1450-0385	
	Packing Carton	1		09182	9211-0862	
	Air Cap, Packing, 4.5 feet	REF		09182	9223-0095	

SECTION VII
CIRCUIT DIAGRAMS

This section contains the circuit diagrams necessary for the operation and maintenance of this power supply. Included are:

a. Component Location Diagram, Figure 7-1, which shows the physical location and reference designator of parts mounted on the printed wiring board.

b. Schematic Diagram, Figure 7-2, which illustrates the circuitry for the entire power supply. Voltages are given adjacent to test points, identified by encircled numbers on the schematic and printed wiring board.

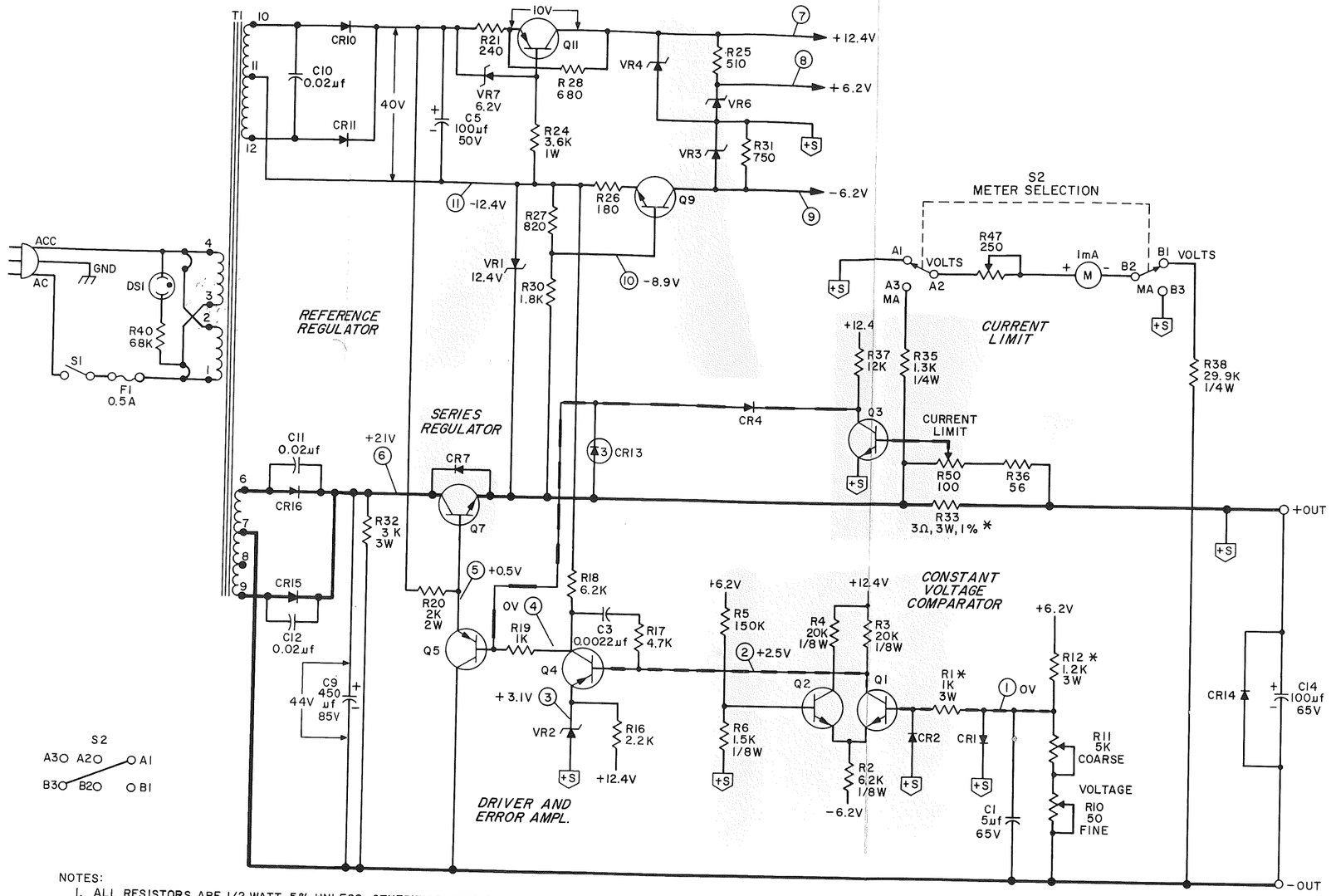

NOTES:

1. ALL RESISTORS ARE 1/2 WATT, 5% UNLESS OTHERWISE SPECIFIED.
2. ALL 1/8 AND 1/4 WATT RESISTORS ARE ±1%, 100PPM.
3. * DENOTES 20PPM WIRE TEMPERATURE COEFFICIENT.
4. METER SWITCH S2 AS VIEWED FROM REAR; SEE ABOVE.
5. ═══ DENOTES VOLTAGE FEEDBACK SIGNAL.
6. ═══ DENOTES CURRENT FEEDBACK SIGNAL.
7. TRANSFORMER SHOWN STRAPPED FOR 115VAC OPERATION. SEE INSTRUCTION MANUAL FOR 220VAC.
8. DC VOLTAGES WERE MEASURED UNDER THE FOLLOWING CONDITIONS:
   A. SIMPSON MODEL 269 OR EQUIVALENT.
   B. 115 VAC INPUT
   C. VOLTAGES REFERENCED TO +S UNLESS OTHERWISE NOTED
   D. VOLTAGES ARE TYPICAL, ±10% UNLESS OTHERWISE NOTED
   E. ALL READINGS TAKEN IN CONSTANT VOLTAGE OPERATION AT MAXIMUM RATED OUTPUT WITH NO LOAD CONNECTED.

Figure 7-2. Model 6215A. Schematic Diagram

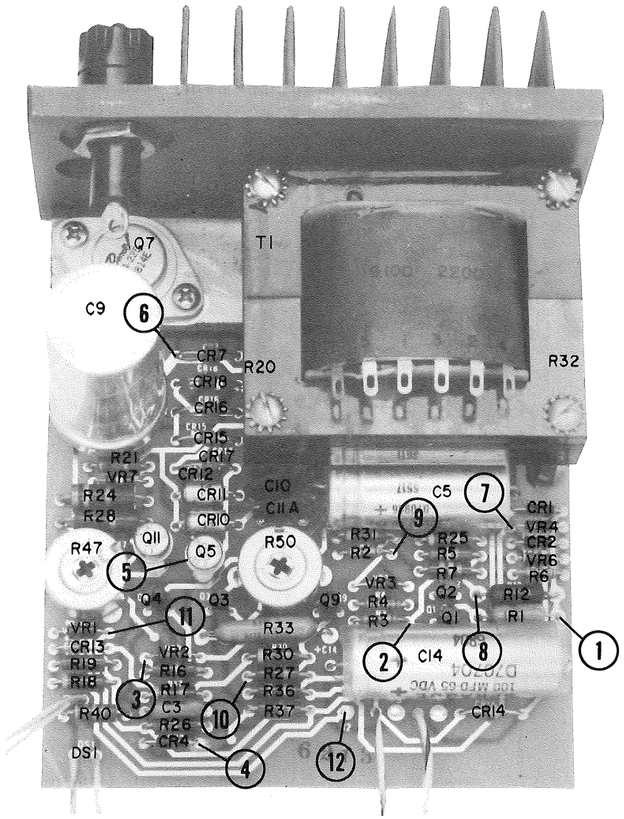

Figure 7-1. Model 6215A
Component Location Diagram

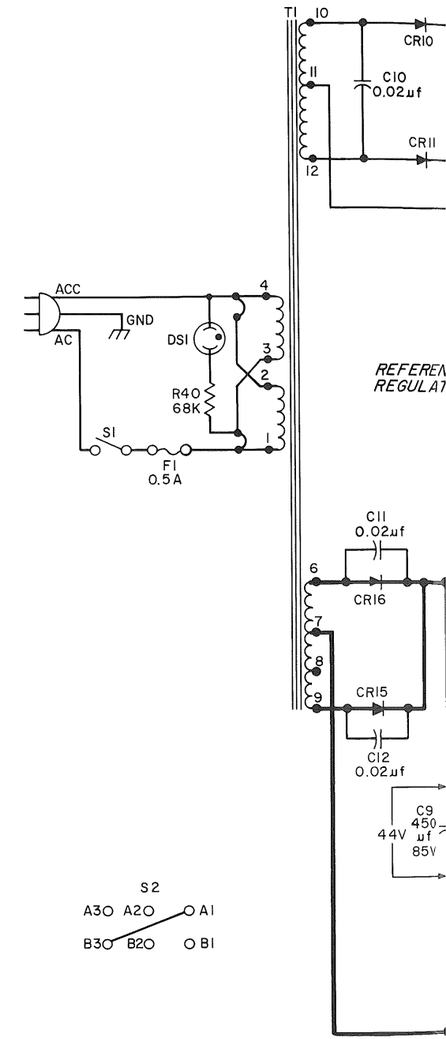

NOTES:
1. ALL RESISTORS ARE 1/2 WATT, 5% UNLE
2. ALL 1/8 AND 1/4 WATT RESISTORS ARE
3. * DENOTES 20PPM WIRE TEMPERATUR
4. METER SWITCH S2 AS VIEWED FROM
5. ▬▬▬▬ DENOTES VOLTAGE
6. ▬▬▬▬ DENOTES CURRENT
7. TRANSFORMER SHOWN STRAPPED FOR INSTRUCTION MANUAL FOR 220VAC.
8. DC VOLTAGES WERE MEASURED UNDER
   A. SIMPSON MODEL 269 OR EQU
   B. 115 VAC INPUT
   C. VOLTAGES REFERENCED TO +S
   D. VOLTAGES ARE TYPICAL, ±10%
   E. ALL READINGS TAKEN IN CONST MAXIMUM RATED OUTPUT WIT

APPENDIX A
MANUAL BACKDATING CHANGES

Manual backdating changes describe changes necessary to adapt this manual to earlier instruments. To adapt the manual to serial numbers prior to 8C2501, inspect the following table for your serial number and then make the appropriate changes. For serial numbers 8C2500 and up, check for inclusion of change sheet.

SERIAL		MAKE CHANGES
Prefix	Number	
8C	2101 - 2500	1
7H	0901 - 2100	1,2
7H	0401 - 0900	1,2,3
7D	0100 - 0400	1,2,3,4

CHANGE 1:

In Table 6-4, Replaceable Parts List, make the following changes:

REF. DESIG.		DESCRIPTION	MFR. PART NO.	MFR. CODE	hp PART NO.
Q11	Change to	SS PNP Si.	40362	02735	1853-0041
R3,4	Change to	fxd, met. film 23KΩ ±1% 1/8W	Type CEA T-O	07716	0698-3269
R5	Change to	fxd, comp 360KΩ ±5% ½ W	EB-3645	01121	0686-3645
R7	Add	fxd, comp 560KΩ ±5% ½ W	EB-5645	01121	0686-5645
R14	Add	fxd, comp 24Ω ±5% ½ W	EB-2405	01121	0686-2405
R16	Change to	fxd, comp 2.2KΩ ±5% ½ W	EB-2225	01121	0686-2225
R17	Change to	fxd, comp 6.2KΩ ±5% ½ W	EB-6225	01121	0686-6225
R18	Change to	fxd, comp 12KΩ ±5% ½ W	EB-1235	01121	0686-1235
R28	Delete	-	-	-	-
S2	Change to	Slide Switch, DPDT ½ knob, solder terminal	11A-1138	82389	3101-1172
	Change to	P.C. Board Assembly		09182	06215-60020
	Change to	P.C. Board, Blank		09182	5020-5597
	Delete	P.C. Board, Front Panel	-	-	-

On schematic, make the following changes:

Delete R28 (open)
Connect R7 from base of Q2 to reference voltage -6.2V (Test Point 9)
Connect R14 from junction of R11 and R12 to reference voltage +S.

Change the component location as shown in Figure A-1.

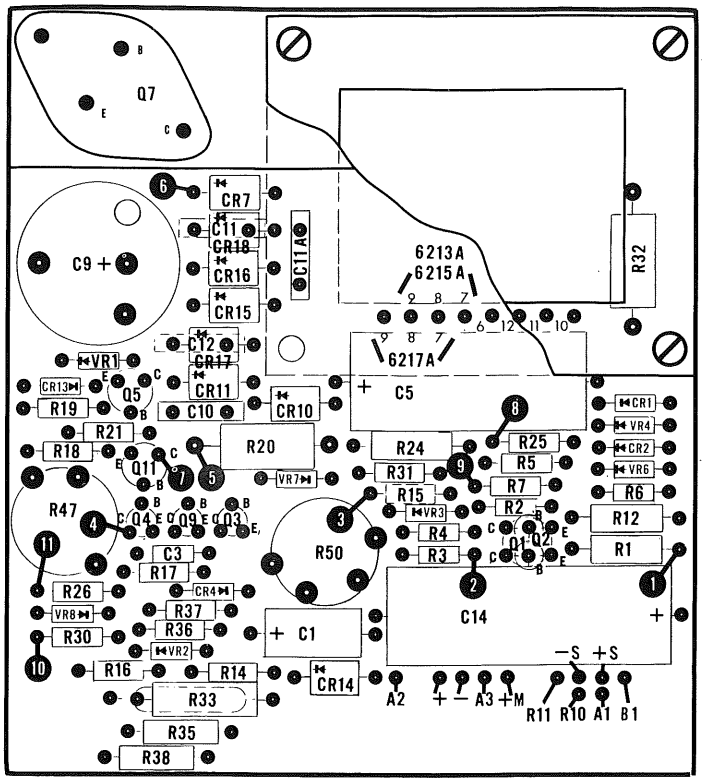

Figure A-1. Model 6215A, Component Location Diagram

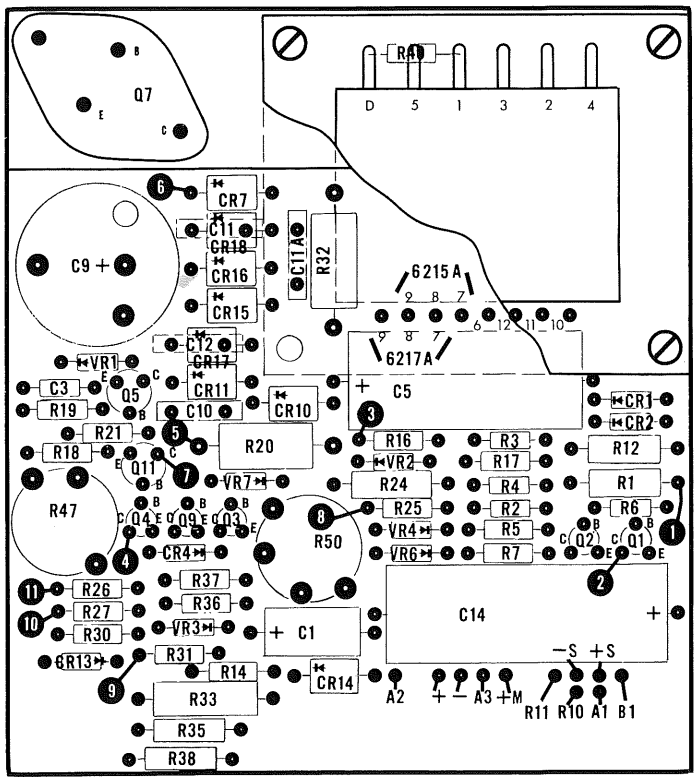

Figure A-2. Model 6215A, Component Location Diagram

CHANGE 2: Change the component location diagram as shown in Figure A-2.
Change CR13 to Rect.250mA 200prv, 1N485B, 93332, hp Part No. 1901-0033.

CHANGE 3: In Table 6-4, Replaceable Parts, make the following change:
F1, Fuse Cartridge 1A 250V 3AG, 312.001, 75915, hp Part No. 2110-0001.

CHANGE 4:

Page 3-1, Paragraph 3-2d. **Change current limit as follows:**
6215A 550 ± 10mA
6217A 310 ± 10mA.

Page 3-1, Paragraph 3-8. **Change current limit as follows:**
6215A 300 - 630mA
6217A 200 - 350mA.

Page 4-1, Figure 4-1. **Delete** amplifier Q3.

Page 4-2, Paragraph 4-10. **Change to:**
4-10 When the external load resistance decreases, the output current increases until the current limit is reached. The negative voltage developed across R33 and R50 forward biases CR4 controlling the conduction of Q5 and Q7. Any further decreases in load resistance increase the negative voltage on the base of Q5 which decreases the conduction of Q7. Thus, through feedback action the output current is limited to the value at which CR4 conducts.

Page 4-3, Paragraph 4-21. **Change to:**
4-21 Current limiting occurs when diode CR4 becomes forward biased. Its anode potential is determined by the voltage at the base of Q5. The cathode potential of CR4 is determined by the voltage drop across current limit potentiometer R50 which, in turn is connected across the current sampling resistor. The cathode potential of CR4 is a function of the output current. As this current increases, the drop across the sampling network increases, and CR4 will start to conduct. Conduction of this diode clamps the base of Q5 to a potential which decreases the conduction of the series regulator, thus limiting the output current. Potentiometer R50 permits the cathode potential of CR4 to be varied and thus changes the current limiting threshold.

Page 5-7, Paragraph 5-39c. **Change:**
475 ± 10mA to 550 ± 10mA
250 ± 10mA to 250 ± 10mA.

Page 6-5 and overall schematic at rear of manual. **Change to:**

C10-C12	fxd, ceramic .02μf 600Vdc	3	Type ED.02	72982	0150-0024	1
R16, 17	fxd, comp 6.2KΩ ±5% ½ W	2	EB-6225	01121	0686-6225	1
S2	Slide Switch, 3PDT, ½ knob, Solder Terminal	1	11A-1138	82389	3101-1172	1
Delete: CR13, Q3, R14, R36, R37, and VR2.						
Add: CR3	Rect. Si. 400mW 10prv	1		09182	1901-0460	1

On overall schematic at rear of manual:
Delete Q3 and connect wiper of R50 to cathode of CR4.
Delete R36 and connect R50 to +S.
Add CR3; connect cathode to TP3 and anode to +S.