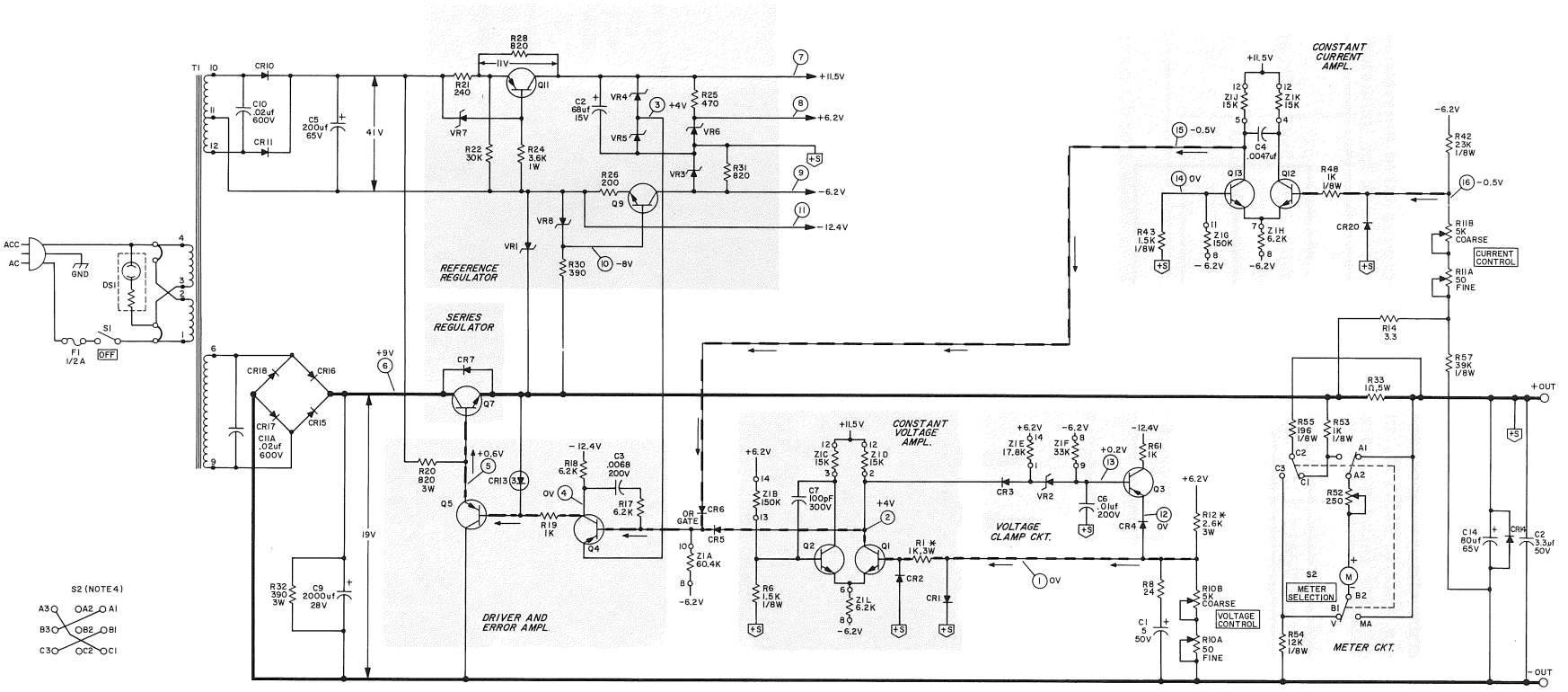

NOTES:
1. ALL RESISTORS ARE 1/2W, 5% UNLESS OTHERWISE SPECIFIED.
2. ALL 1/8 AND 1/4WATT RESISTORS ARE 1%, 100PPM.
3. ✱ DENOTES 20PPM WIRE TEMPERATURE COEFFICIENT.
4. METER SWITCH, S2, AS VIEWED FROM REAR. SHOWN IN VOLTAGE POSITION.
5. ———— DENOTES VOLTAGE FEEDBACK SIGNAL.
6. ——·——·—— DENOTES CURRENT FEEDBACK SIGNAL.
7. TRANSFORMER SHOWN STRAPPED FOR 115V OPERATION. SEE INSTRUCTION MANUAL FOR 220VAC.
8. DC VOLTAGES WERE MEASURED UNDER THE FOLLOWING CONDITIONS:
   A. SIMPSON MODEL 269 OR EQUIVALENT.
   B. 115VAC INPUT.
   C. VOLTAGES REFERENCED TO +S UNLESS OTHERWISE NOTED.
   D. VOLTAGES ARE TYPICAL, ±10%, UNLESS OTHERWISE NOTED.
   E. ALL READINGS TAKEN IN CONSTANT VOLTAGE OPERATION AT MAXIMUM RATED OUTPUT WITH NO LOAD CONNECTED AND CURRENT CONTROL TURNED FULLY CLOCKWISE.

Figure 7-2. Model 6214A, Schematic Diagram