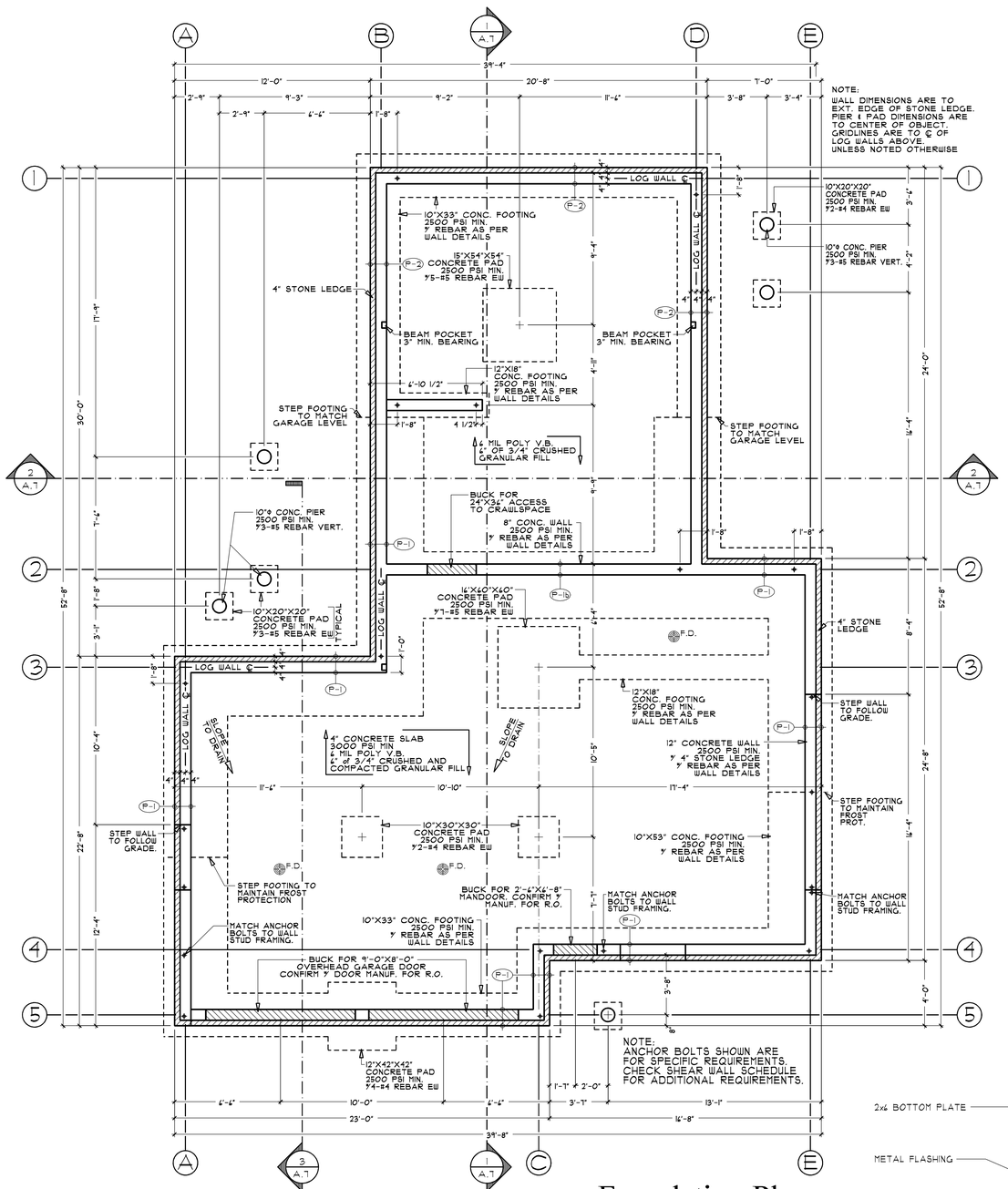

1 A.3 **Foundation Plan**
SCALE: 1/4"=1'-0"

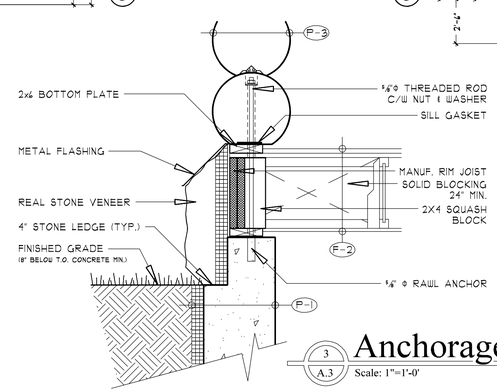

3 A.3 **Anchorage Detail**
Scale: 1"=1'-0' Typical

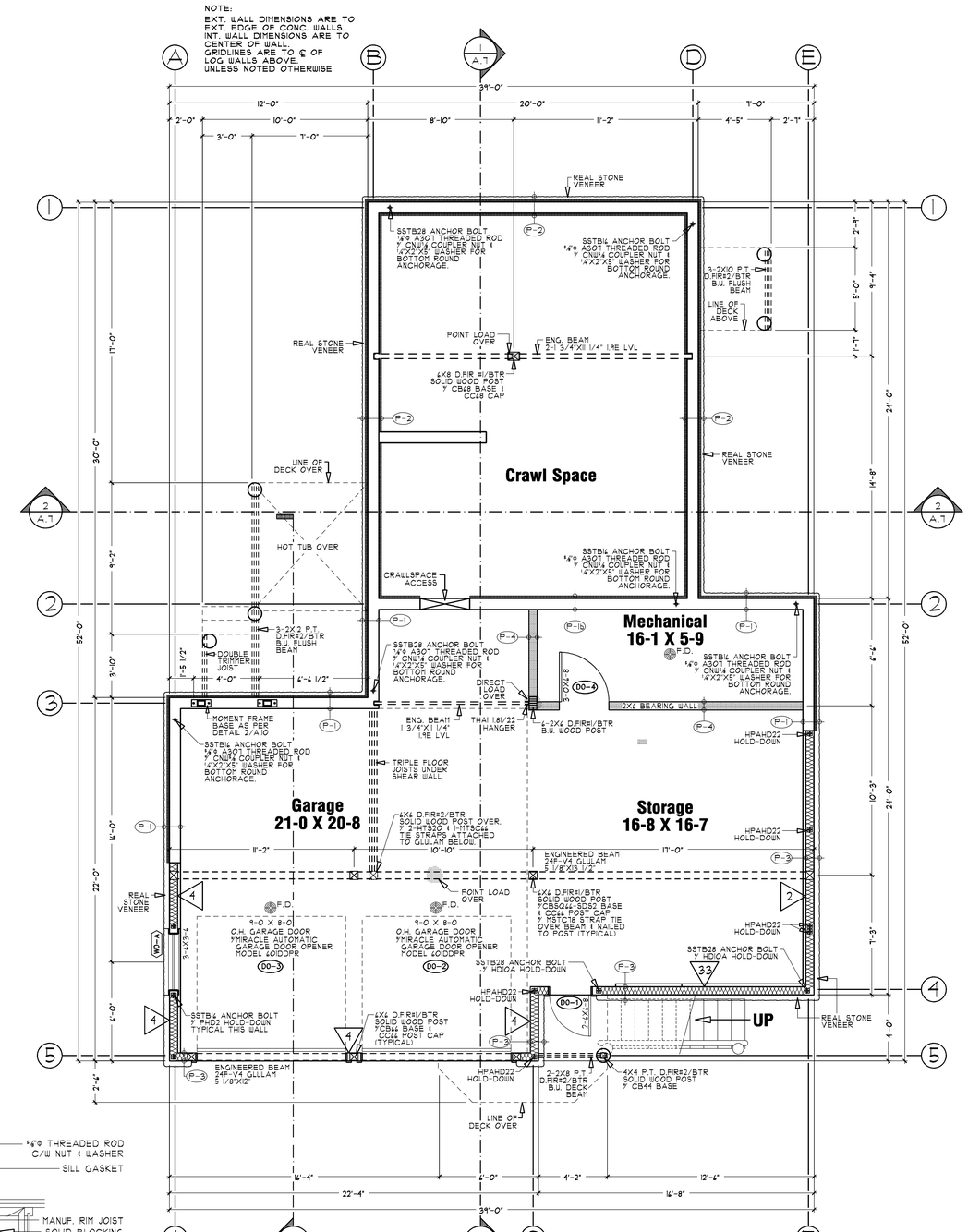

2 A.3 **Lower Floor Plan**
SCALE: 1/4"=1'-0" AREA= 953 SQ FT

ISSUED FOR PERMIT

REVISIONS
1
2
3
4
5

The Log Connection
1128 Main St.
Penticton, B.C., Canada
V2A 4L6
Toll Free 1-888-207-0210
Phone (250) 770-8031
E-mail: loghomes@thelogconnection.com
www.thelogconnection.com

The Log Connection
Log Home Specialist

Dobias Residence

PREPARED FOR:
Scott Dobias, 321 Cazador Lane, San Clemente, CA 02672
Phone Number: (949) 310-8187
Site Address: 2361 Old Mammoth Rd. Mammoth Lakes, CA.

General Contractor: Scott Dobias, San Clemente, CA
Structural Engineering: Alpine Engineering, 615 Front St. Coeur d'Alene, Idaho, 83814
Phone Number: (208) 667-2600

PAGE TITLE	FOUNDATION / LOWER PLAN
SCALE	1/4"=1'-0"
DATE	15 OCT. 2004
DRAWN BY	ROBERT WOOD
CHECKED BY	DAVE SUTTON

A.3