INTEL® PLATFORM FIRMWARE RESILIENCE (INTEL® PFR) –ARCHITECTURE ROADMAP

Intel Corporation
Data Center Platform Application Engineering
March 2020
Reference Number: xxxxx
Revision Number: 1.0
Intel Confidential

Legal Disclaimer

Notice: This document contains information on products in the design phase of development. The information here is subject to change without notice. Do not finalize a design with this information.

Intel technologies' features and benefits depend on system configuration and may require enabled hardware, software or service activation. Learn more at Intel.com, or from the OEM or retailer..

No computer system can be absolutely secure. Intel does not assume any liability for lost or stolen data or systems or any damages resulting from such losses.

You may not use or facilitate the use of this document in connection with any infringement or other legal analysis concerning Intel products described herein. You agree to grant Intel a non-exclusive, royalty-free license to any patent claim thereafter ed which includes subject matter disclosed herein.

No license (express or implied, by estoppel or otherwise) to any intellectual property rights is granted by this document.

The products described may contain design defects or errors known as errata which may cause the product to deviate from published specifications. Current characterized errata are available on request.

This document contains information on products, services and/or processes in development. All information provided here is subject to change without notice. Contact your Intel representative to obtain the latest Intel product specifications and roadmaps.

Intel disclaims all express and implied warranties, including without limitation, the implied warranties of merchantability, fitness for a particular purpose, and non-infringement, as well as any warranty arising from course of performance, course of dealing, or usage in trade.

Copies of documents which have an order number and are referenced in this document may be obtained by calling 1-800-548-4725 or by visiting www.intel.com/design/literature.htm.

Intel and the Intel logo are trademarks of Intel Corporation in the U. S. and/or other countries.

*Other names and brands may be claimed as the property of others.

Copyright © 2020, Intel Corporation. All Rights Reserved.

Intel® PFR: Architecture Diagram

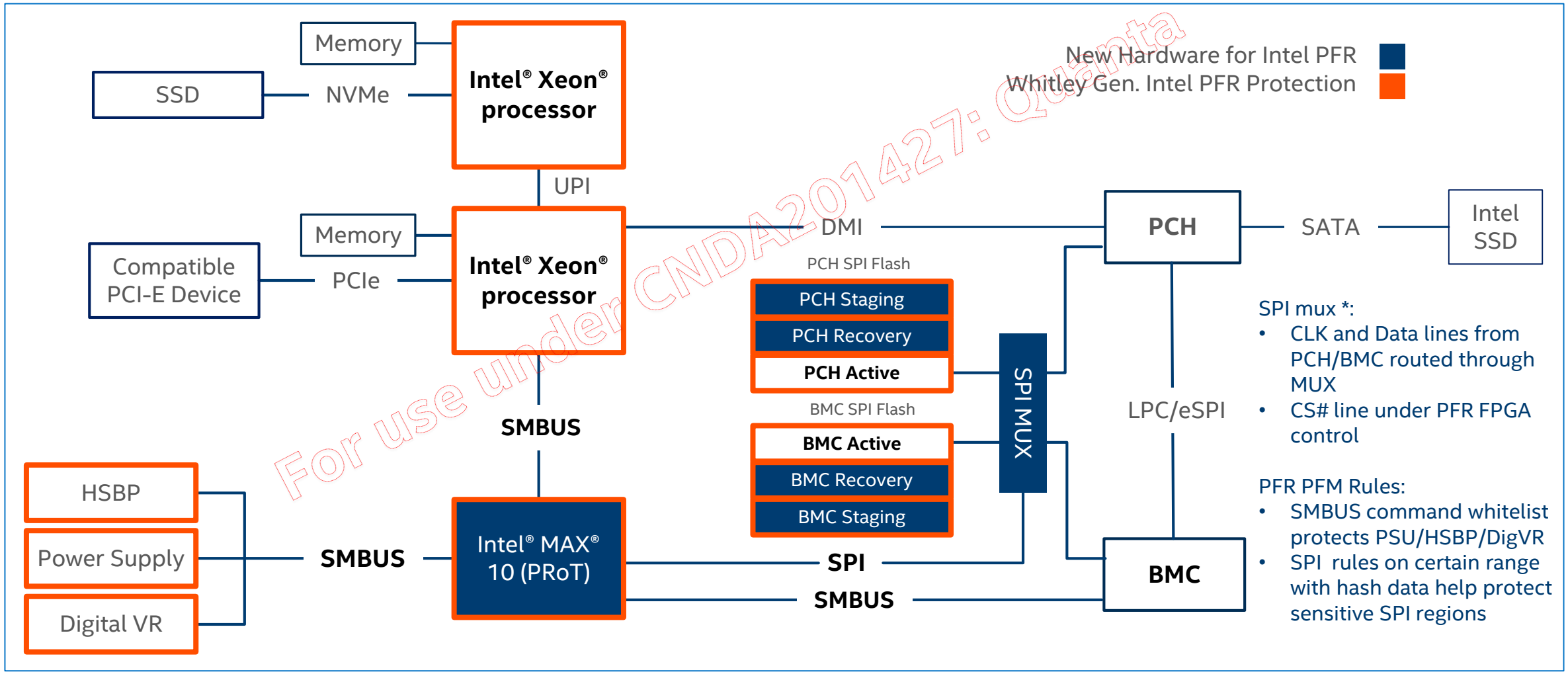

For use under CNDA201427: Quanta

Intel® PFR T-1 Boundary

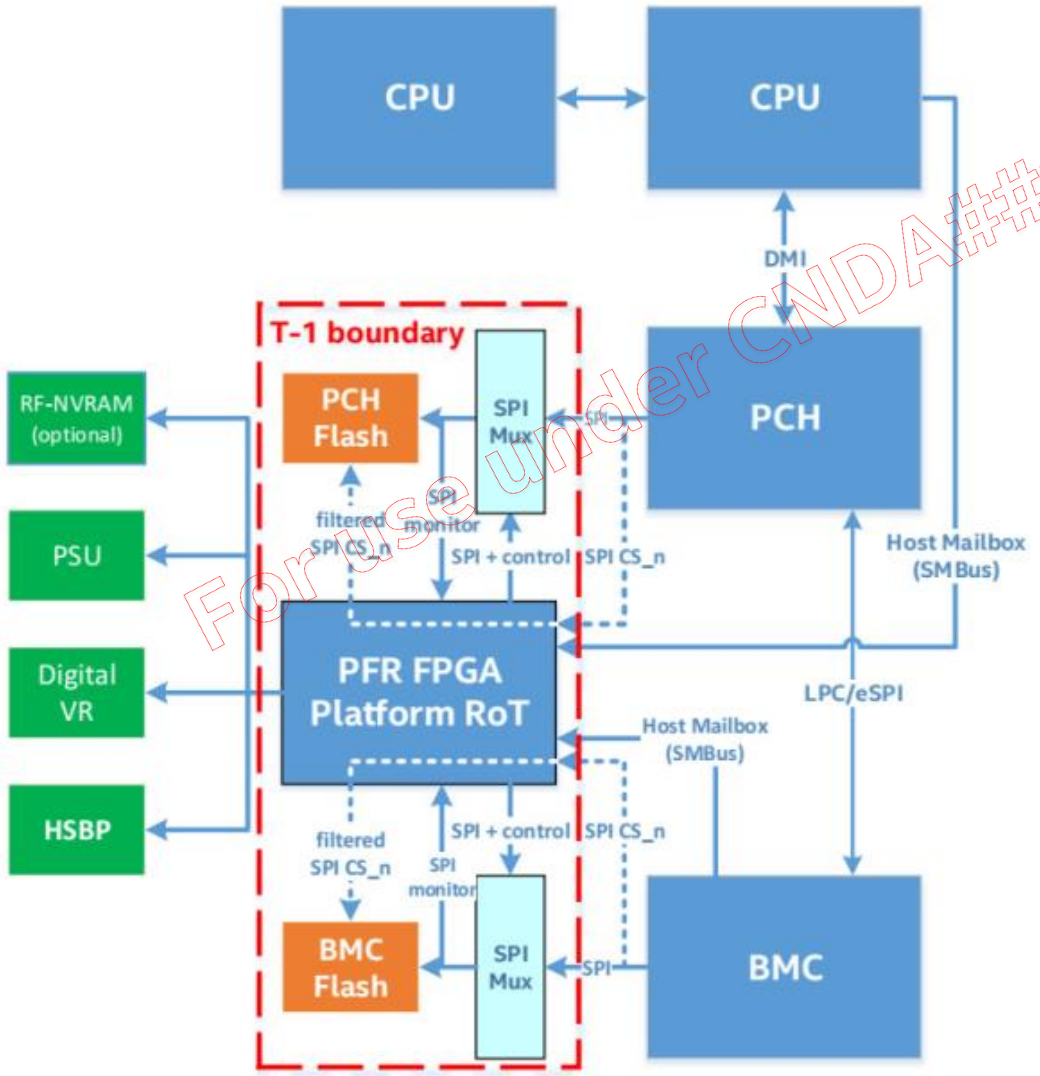

- FPGA (CPLD) based PRoT to perform RTU/RTD/RTRec Task listed in NIST.SP.800-193
- PRoT hold PCH/BMC at reset, within T-1 TCB, verify platform FW before hand them over to PCH/BMC
- **Protect**: Monitors and filters unauthorized or malicious traffic on system buses (SPI/SMBus)
- **Detect**: Verifies integrity of platform firmware images before executing
- **Recovery**: Automatically restores corrupted firmware from a protected recovery image

For use under CNDA#####: CusuName

Intel and the Intel logo are trademarks of Intel Corporation in the U. S. and/or other countries. *Other names and brands may be claimed as the property of others. Copyright © 2018, Intel Corporation. Intel Confidential – for NDA Use Only

PFR Future Platform Enhancements

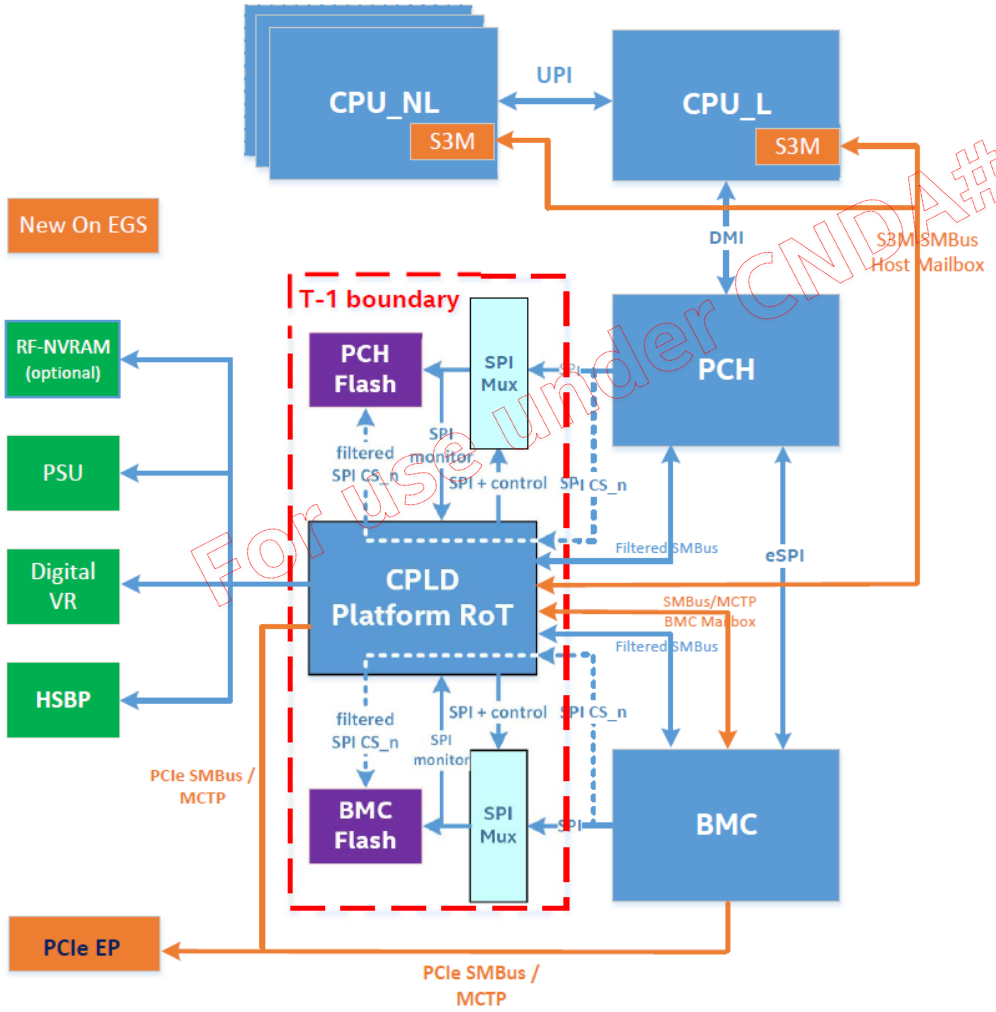

PFR 2.0 - ICX/CPX-6	PFR 3.0 - SPR
• PRoT w/ NIST SP800-193 ▪ Protect ▪ Detect ▪ Recover • Verified Boot of Platform FW • Secure Update of Platform FW and PRoT device • Integration with ACM, BIOS SPS, and BMC FW	**PFR 2.0 +** • SPDM-based Attestation of PRoT ▪ Detect PRoT Tampering • SPDM-based Device Attestation ▪ Supported PCIe devices and BMC • Improved Quantum – Resilient Crypto ▪ ECDSA-384 + SHA-384 ▪ Larger CPLD device (16K/324pin → 40K/384pin) ▪ Faster access time with DMA

For use under CNDA#####CustName

Intel and the Intel logo are trademarks of Intel Corporation in the U. S. and/or other countries. *Other names and brands may be claimed as the property of others. Copyright © 2018, Intel Corporation. Intel Confidential – for NDA Use Only

PFR 3.0 EGS/SPR Enhancements

For use under CNDA#####, CustName

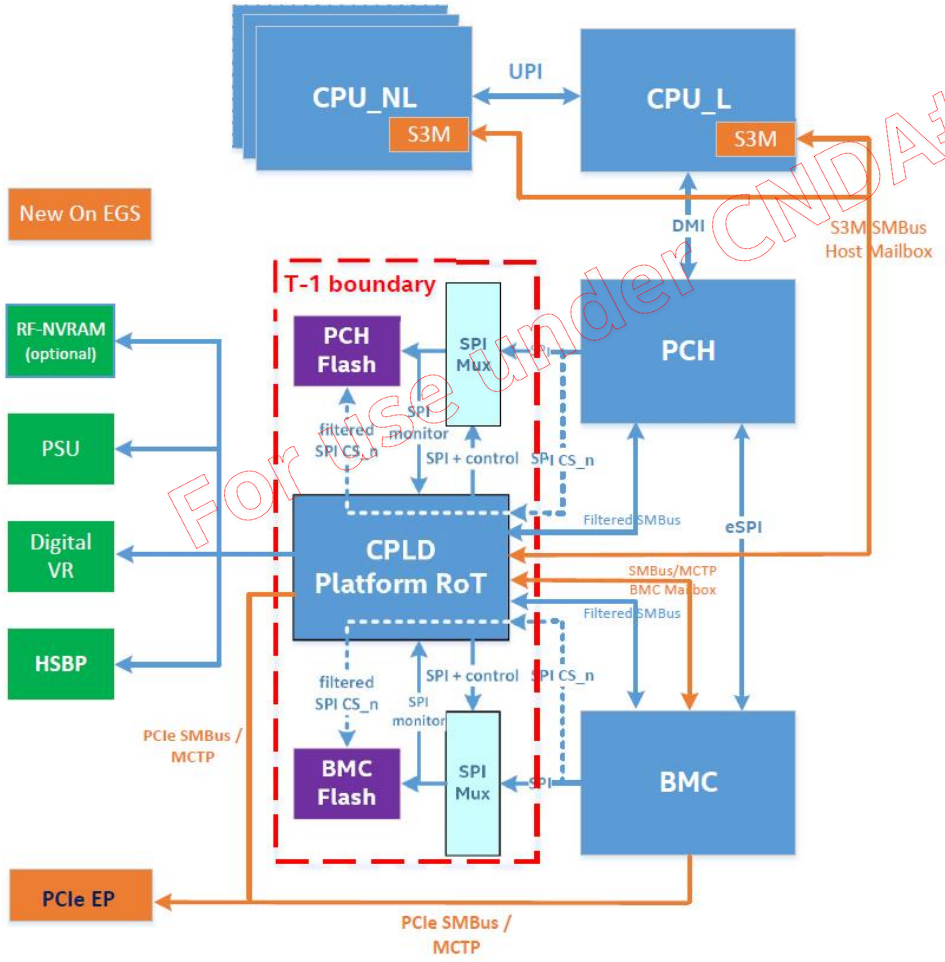

PRoT Attestation

- Unique private/pub key pair with X.509 certificate per PRoT
- Authenticate boot of PFR CPLD configuration
- DICE-like key scheme self-generated on PFR CPLD
  - First level key static derive from secret
  - Second level key dynamic derived from secret and measurement of CPLD configuration
  - Minimal X.509 certificates
- Support for challenge-response attestation over MCTP via SPDM

Device authentication

- Support for SPDM/MCTP attestation of compatible PCIe devics and other MCTP endpoints

Intel and the Intel logo are trademarks of Intel Corporation in the U. S. and/or other countries. *Other names and brands may be claimed as the property of others. Copyright © 2018, Intel Corporation. Intel Confidential – for NDA Use Only

PFR on Eagle Stream Enhancements

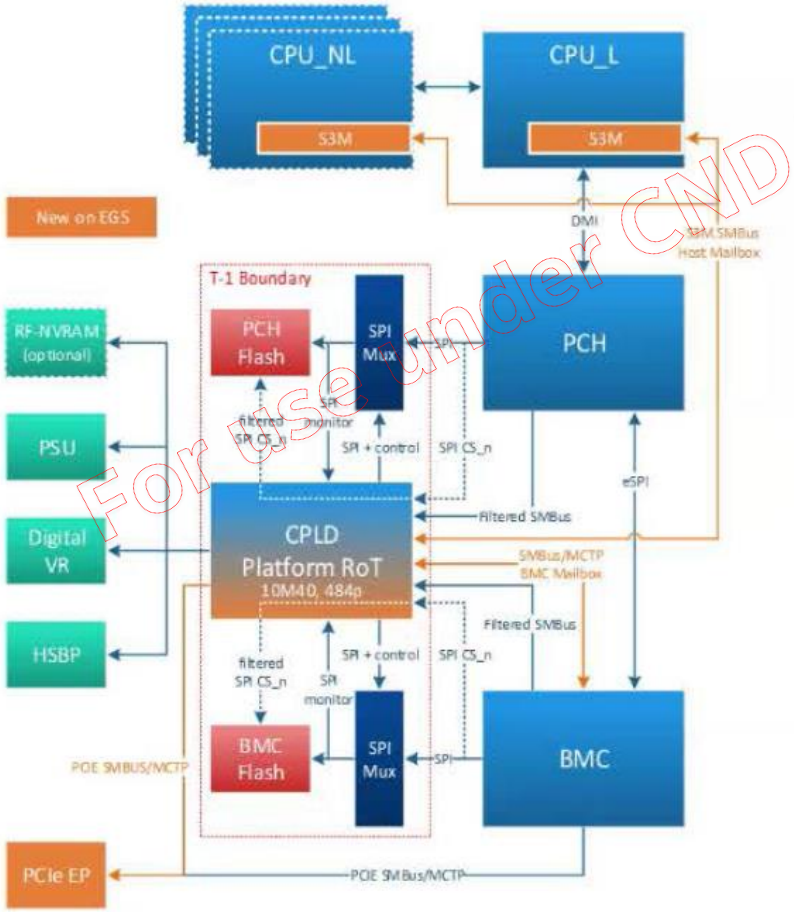

Larger CPLD for PFR

- (16k/324pin -> 40k/484pin)
- Crypto upgrade to SHA-384 + ECDSA-384
  - Verification and signing capability
  - RNG addition
- Added MCTP support w/attestation

Move from SPD SMBus to S3M.SMBus

Connect PFR to PCIe header SMBus

- Used for MCTP auth. of devices
- SMBus link shared with Host/BMC
- (alt. option) relay MCTP through BMC

For use under CNDA#####-CustName

PFR Security Feature Roadmap

For use under CNDA#####: CustName

Table 1-4. Intel® PFR Security Feature Roadmap

Phase I - 2019/2020 (Whitley, Cedar Island, Idaville)	Phase II - 2021 (Eagle stream)	Phase III - 2022 (In Planning)
• Platform RoT w/NIST SP800-193 — Protect — Detect — Recover • Verified Boot of all platform FW • Secure Remote Update of platform FW and PRoT device • Integrated provisioning flow of OEM Public Key and flexible key hierarchy with revocation • End-to-end integration with ACM, BIOS, SPS, BMC firmware • Intel® MAX®10 based solution	• Intel PFR Phase I plus: • PKI based attestation of PRoT — Challenge-response authentication — Detection of PRoT tampering • Integration with OCP PRoT specification and OCP-defined protocols • Support for OOB Device Attestation — DMTF/MCTP security support • Improved post-quantum cryptography • Intel® MAX®10 based solution	• Intel PFR Phase II plus: • Improved PRoT attestation • Advanced Anti-Tampering • Crypto Service – PKCS #11 • FIPS 140-2 • Industry PRoT Standard • Cost & Power optimizations • Next generation Intel silicon supporting open Intel PFR design
2019/2020	2021	2022

Intel and the Intel logo are trademarks of Intel Corporation in the U. S. and/or other countries. *Other names and brands may be claimed as the property of others. Copyright © 2018, Intel Corporation. Intel Confidential – for NDA Use Only

intel®