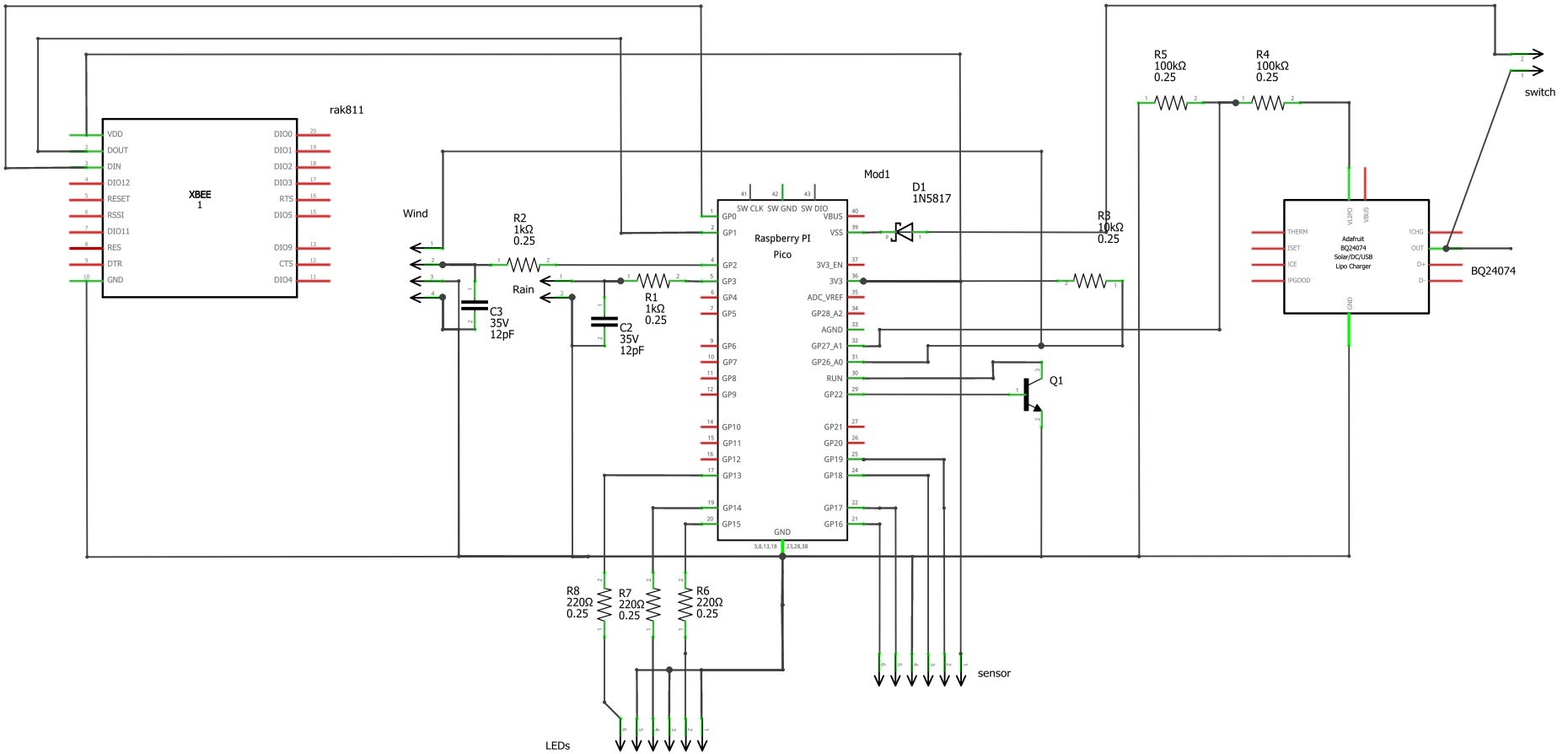
rak811
XBEE
1
VDD
DOUT
DIN
DIO12
RESET
RSSI
DIO11
RES
DTR
GND
DIO0
DIO1
DIO2
DIO3
RTS
DIO5
DIO9
CTS
DIO4
Wind
R2
1kΩ
0.25
Rain
C3
35V
12pF
C2
35V
12pF
R1
1kΩ
0.25
Mod1
Raspberry PI
Pico
SW CLK SW GND SW DIO
GP0
GP1
GP2
GP3
GP4
GP5
GP6
GP7
GP8
GP9
GP10
GP11
GP12
GP13
GP14
GP15
VBUS
VSS
3V3_EN
3V3
ADC_VREF
GP28_A2
AGND
GP27_A1
GP26_A0
RUN
GP22
GP21
GP20
GP19
GP18
GP17
GP16
GND
D1
1N5817
R3
10kΩ
0.25
Q1
R5
100kΩ
0.25
R4
100kΩ
0.25
switch
THERM
ISET
ICE
IPGOOD
Adafruit
BQ24074
Solar/DC/USB
Lipo Charger
VLIPO
VBUS
ICHG
OUT
D+
D-
GND
BQ24074
R8
220Ω
0.25
R7
220Ω
0.25
R6
220Ω
0.25
sensor
LEDs

fritzing