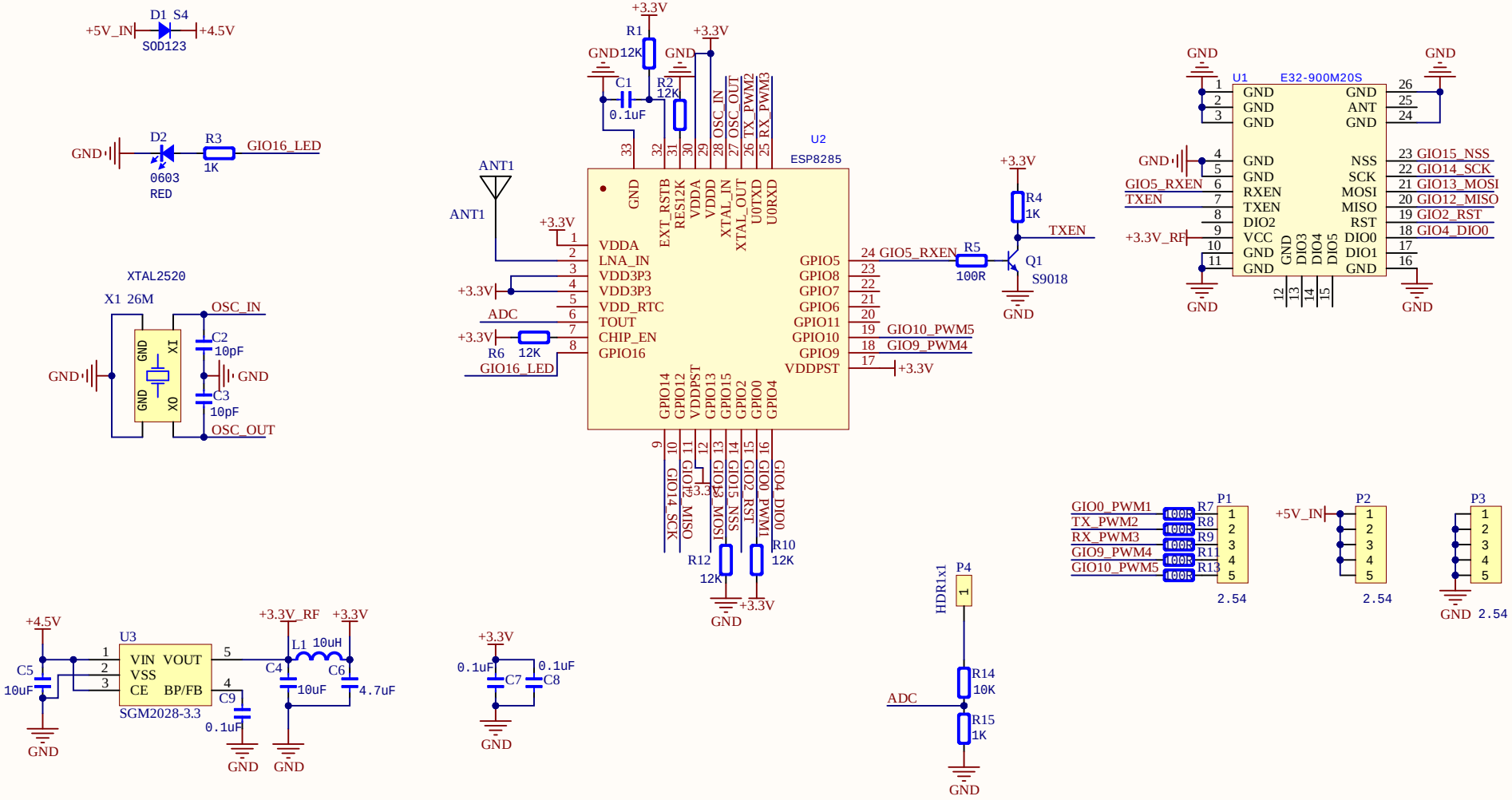

Title		
Size A4	Number	Revision
Date: 1/28/2022		Sheet of
File: G:\电子线路设计\..\ESP8285_E32PWM_Main.SchDoc		