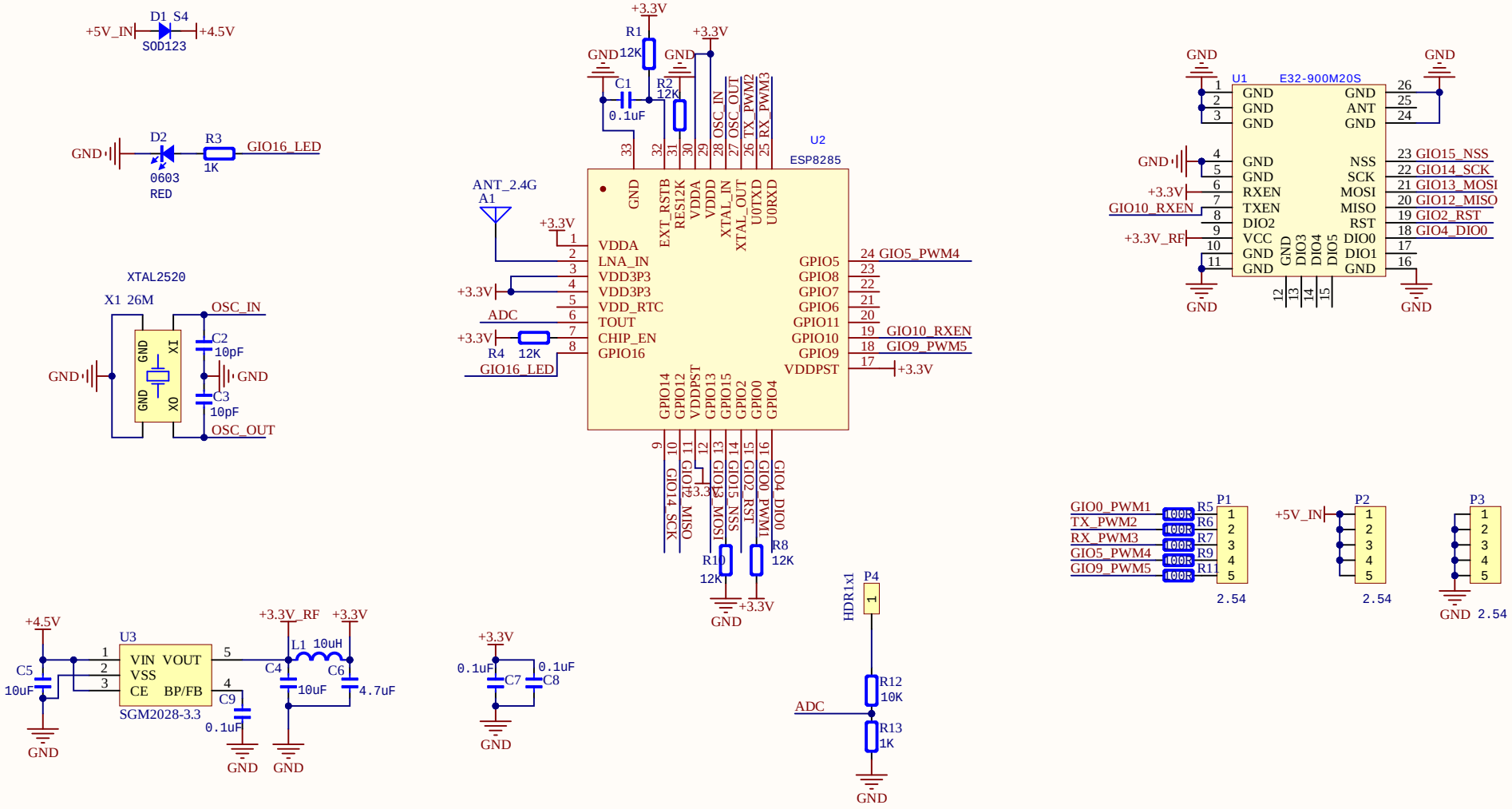

Title		
Size A4	Number	Revision
Date: 12/15/2021		Sheet of
File: E:\电子线路设计\..\ESP8285_E32PWM_RX.SchDoc		Drawn By: