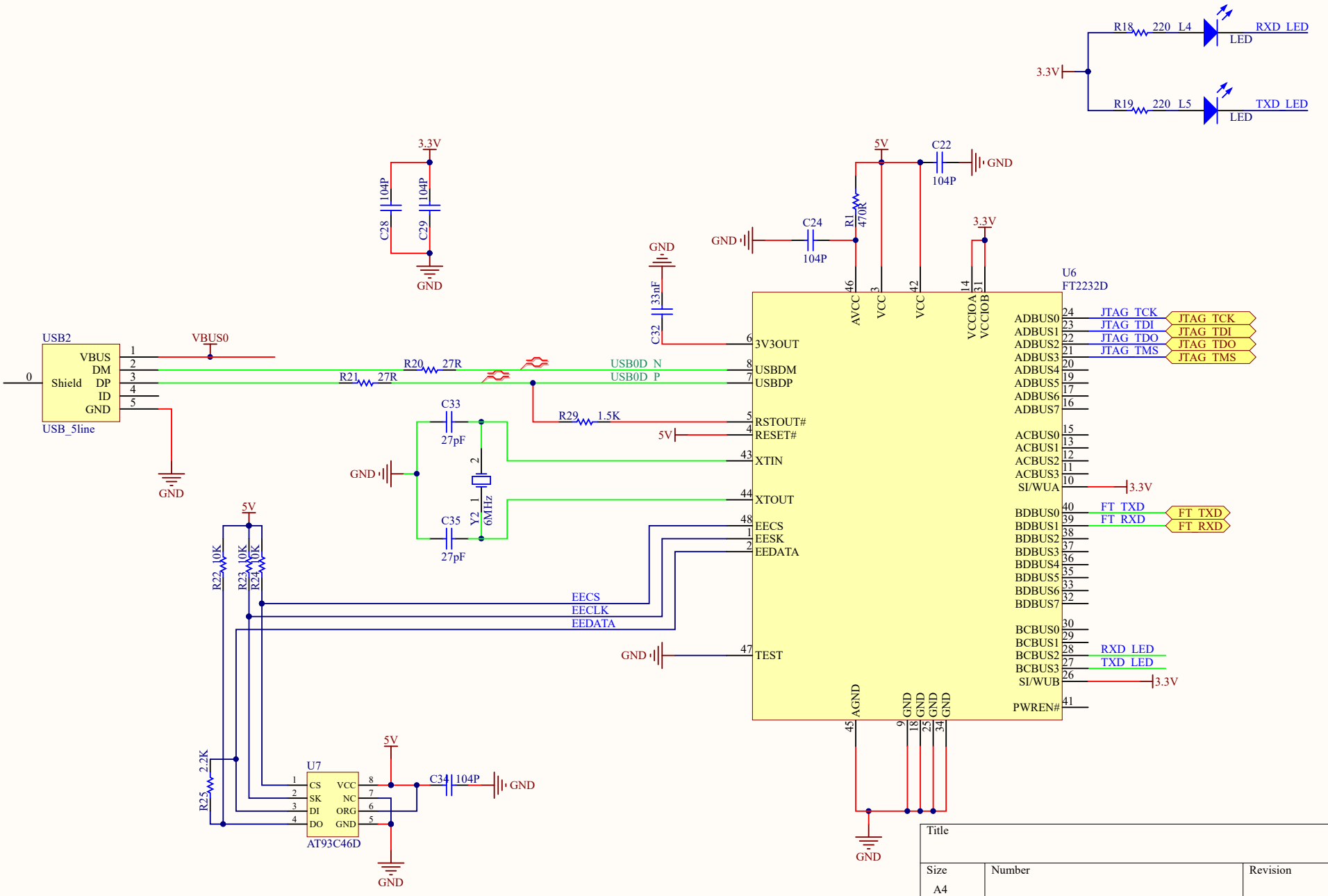
R18 220 L4
RXD_LED
LED
3.3V
R19 220 L5
TXD_LED
LED
3.3V
C28 104P
C29 104P
GND
5V
C22 104P
GND
R1 470K
C24 104P
GND
3.3V
GND
C32 33nF
U6
FT2232D
USB2
VBUS
DM
DP
ID
GND
Shield
USB_5line
VBUS0
R20 27R
R21 27R
USB0D_N
USB0D_P
R29 1.5K
5V
C33 27pF
C35 27pF
Y2 6MHz
GND
3V3OUT
USBDM
USBDP
RSTOUT#
RESET#
XTIN
XTOUT
EECS
EESK
EEDATA
TEST
AVCC
VCC
VCCIOA
VCCIOB
AGND
ADBUS0 JTAG_TCK
ADBUS1 JTAG_TDI
ADBUS2 JTAG_TDO
ADBUS3 JTAG_TMS
ACBUS0
ACBUS1
ACBUS2
ACBUS3
SI/WUA
BDBUS0 FT_TXD
BDBUS1 FT_RXD
BCBUS0
BCBUS1
BCBUS2 RXD_LED
BCBUS3 TXD_LED
SI/WUB
PWREN#
R22 10K
R23 10K
R24 10K
EECS
EECLK
EEDATA
R25 2.2K
U7
CS
SK
DI
DO
VCC
NC
ORG
GND
AT93C46D
C34 104P
GND
Title
Size A4
Number
Revision
Date: 2018/1/2
Sheet of
File: E:\prj_catalog\..\USB.SchDoc
Drawn By: