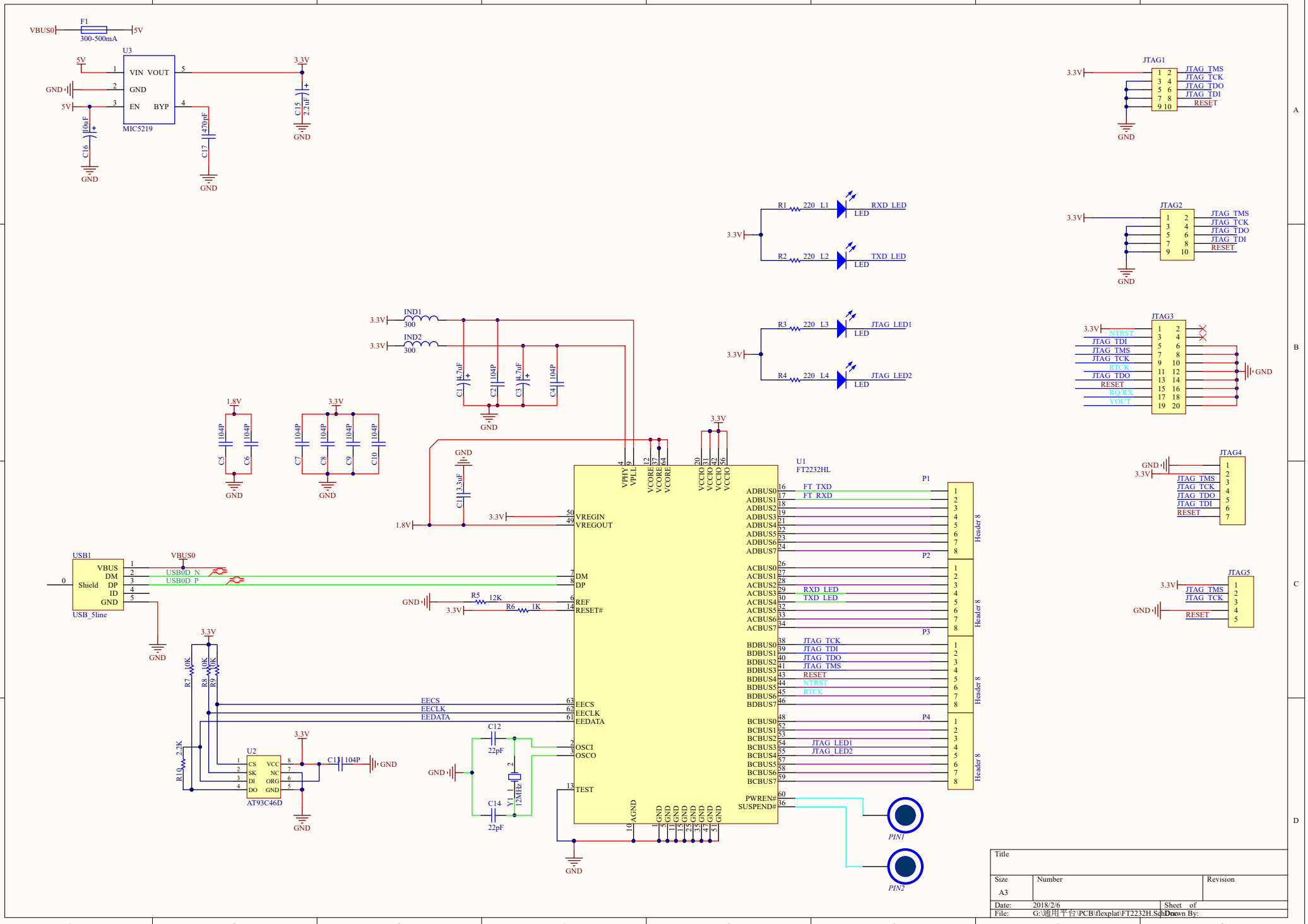
VBUS0
F1
300-500mA
5V
U3
VIN VOUT
GND
EN BYP
MIC5219
3.3V
C15
2.2uF
C16
10uF
C17
470pF
GND
JTAG1
JTAG_TMS
JTAG_TCK
JTAG_TDO
JTAG_TDI
RESET
JTAG2
R1 220 L1
RXD_LED
LED
R2 220 L2
TXD_LED
R3 220 L3
JTAG_LED1
R4 220 L4
JTAG_LED2
JTAG3
NTRST
RTCK
RQ/RX
VOUT
JTAG4
JTAG5
IND1
300
IND2
C1 4.7uF
C2 104P
C3 4.7uF
C41 104P
1.8V
C5 104P
C6 104P
C7 104P
C8 104P
C9 104P
C10 104P
C11 3.3uF
U1
FT2232HL
VPHY
VPLL
VCORE
VCCIO
VREGIN
VREGOUT
DM
DP
REF
RESET#
EECS
EECLK
EEDATA
OSCI
OSCO
TEST
AGND
ADBUS0
ADBUS1
ADBUS2
ADBUS3
ADBUS4
ADBUS5
ADBUS6
ADBUS7
ACBUS0
ACBUS1
ACBUS2
ACBUS3
ACBUS4
ACBUS5
ACBUS6
ACBUS7
BDBUS0
BDBUS1
BDBUS2
BDBUS3
BDBUS4
BDBUS5
BDBUS6
BDBUS7
BCBUS0
BCBUS1
BCBUS2
BCBUS3
BCBUS4
BCBUS5
BCBUS6
BCBUS7
PWREN#
SUSPEND#
FT_TXD
FT_RXD
RXD_LED
TXD_LED
JTAG_TCK
JTAG_TDI
JTAG_TDO
JTAG_TMS
RESET
NTRST
RTCK
JTAG_LED1
JTAG_LED2
P1
P2
P3
P4
Header 8
USB1
VBUS
DM
DP
ID
GND
Shield
USB_5line
USB0D_N
USB0D_P
R5 12K
R6 1K
R7 10K
R8 10K
R9 10K
R10 2.2K
U2
CS
SK
DI
DO
VCC
NC
ORG
AT93C46D
C12 22pF
C14 22pF
Y1 12MHz
C13 104P
PIN1
PIN2
Title
Size
A3
Number
Revision
Date: 2018/2/6
Sheet of
File: G:\通用平台\PCB\flexplat\FT2232H.SchDoc
Drawn By:

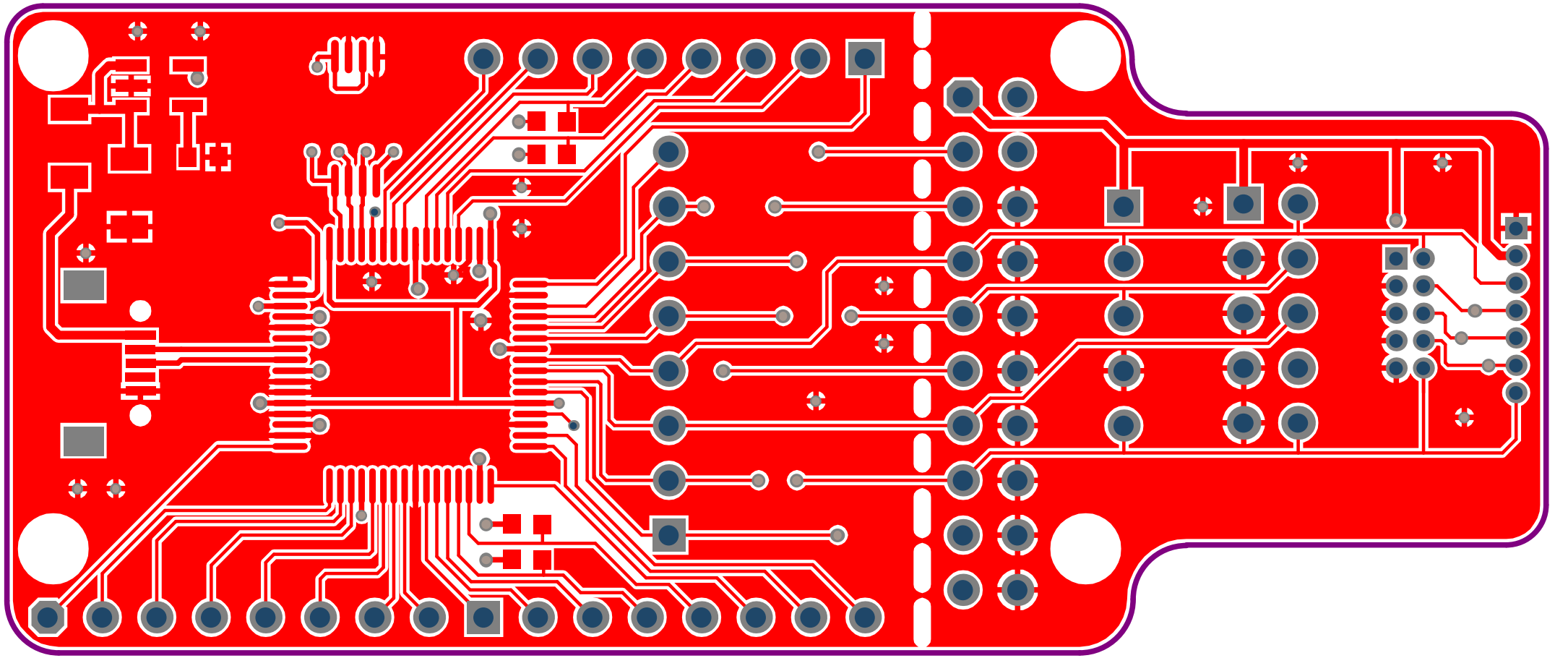

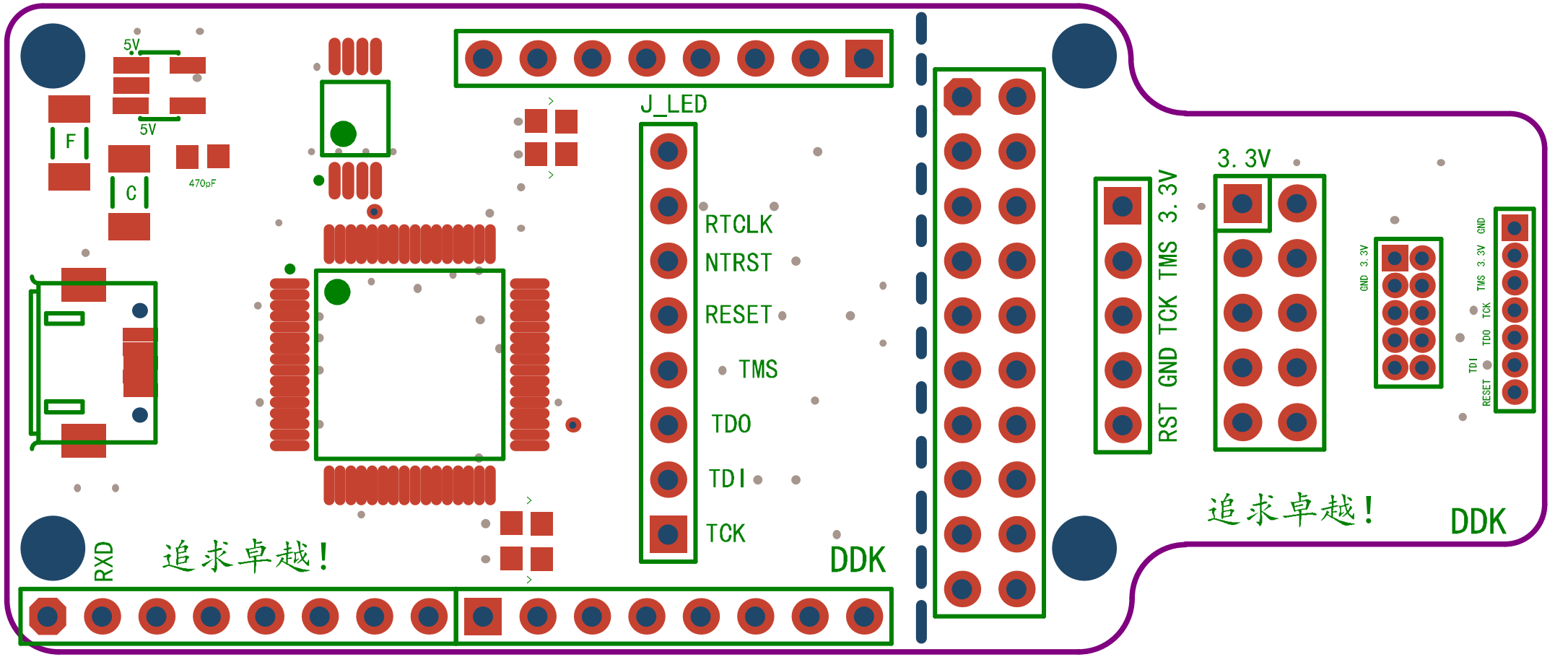
5V
5V
F
C
470pF
J_LED
RTCLK
NTRST
RESET
TMS
TDO
TDI
TCK
DDK
RXD
追求卓越！
RST
GND
TCK
TMS
3.3V
3.3V
追求卓越！
DDK
GND
3.3V
TDI
RESET
TDO
TCK
TMS
3.3V
GND

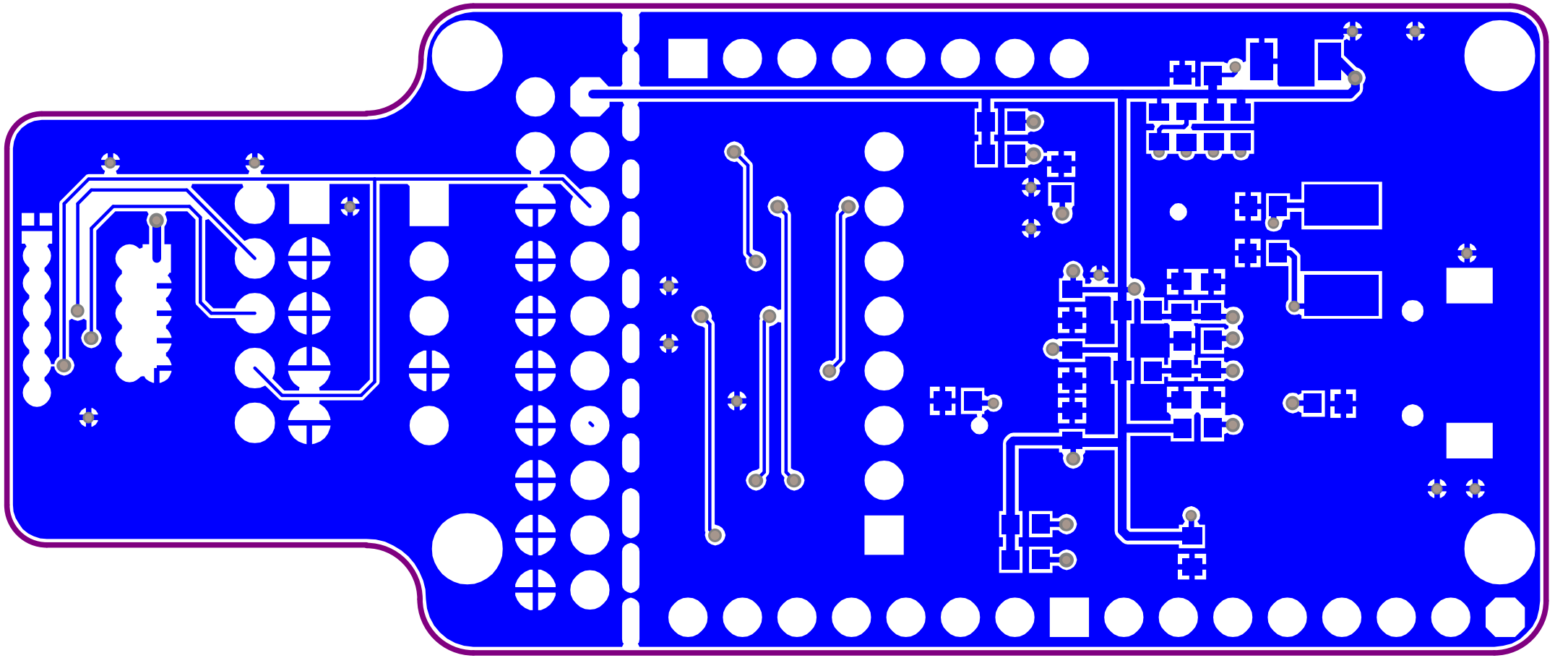

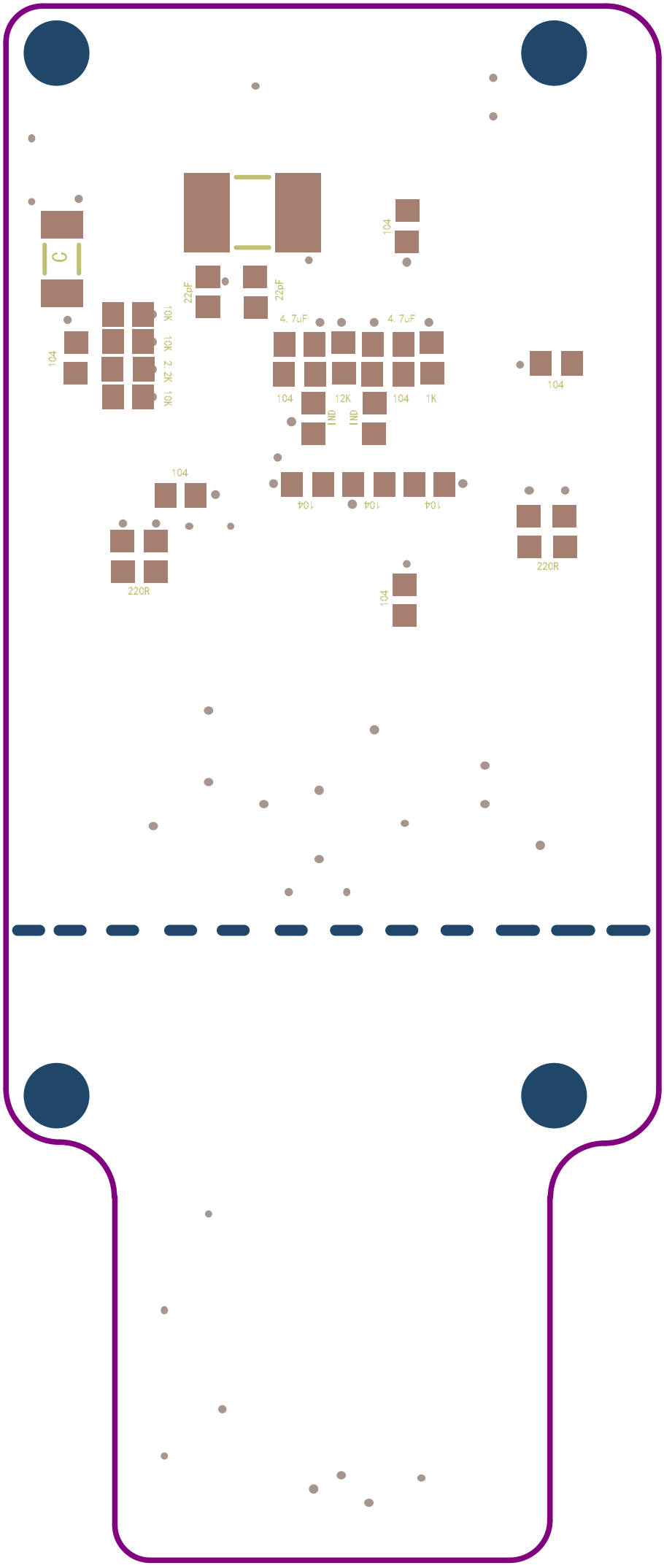
C
104
22pF
22pF
10K
10K
2.2K
10K
4.7uF
4.7uF
104
12K
104
1K
IND
IND
104
104
104
104
104
220R
220R
104
104