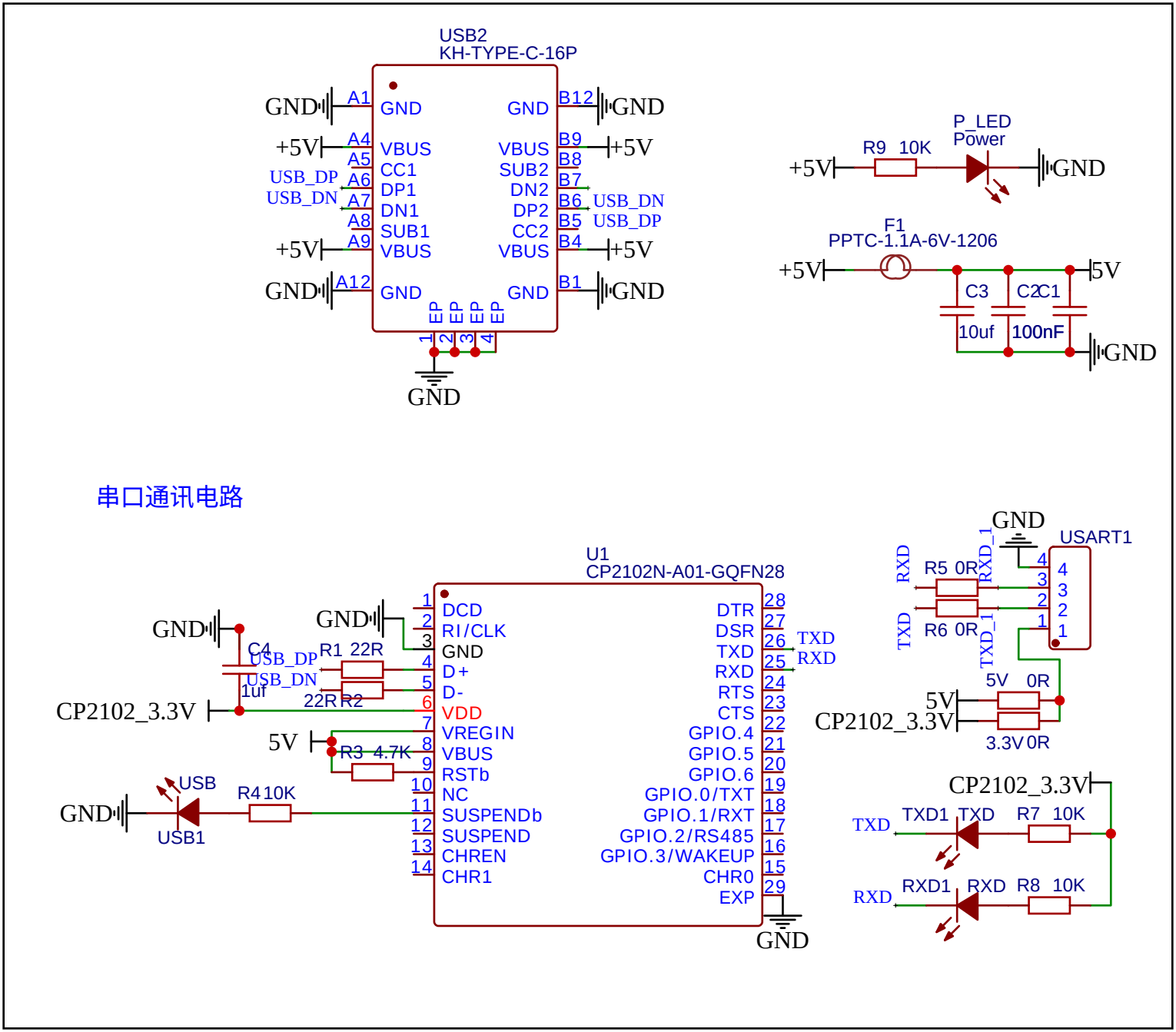
USB2
KH-TYPE-C-16P
GND
A1
GND
GND
B12
GND
+5V
A4
VBUS
VBUS
B9
+5V
A5
CC1
SUB2
B8
USB_DP
A6
DP1
DN2
B7
USB_DN
A7
DN1
DP2
B6
USB_DN
A8
SUB1
CC2
B5
USB_DP
+5V
A9
VBUS
VBUS
B4
+5V
GND
A12
GND
GND
B1
GND
EP
EP
EP
EP
1
2
3
4
GND
P_LED
Power
+5V
R9 10K
GND
F1
PPTC-1.1A-6V-1206
+5V
C3
C2
C1
5V
10uf
100nF
GND
串口通讯电路
U1
CP2102N-A01-GQFN28
GND
C4
USB_DP
USB_DN
1uf
CP2102_3.3V
GND
R1 22R
22R R2
5V
R3 4.7K
USB
GND
R4 10K
USB1
DCD
RI/CLK
GND
D+
D-
VDD
VREGIN
VBUS
RSTb
NC
SUSPENDb
SUSPEND
CHREN
CHR1
DTR
DSR
TXD
RXD
RTS
CTS
GPIO.4
GPIO.5
GPIO.6
GPIO.0/TXT
GPIO.1/RXT
GPIO.2/RS485
GPIO.3/WAKEUP
CHR0
EXP
TXD
RXD
GND
GND
USART1
RXD
R5 0R
RXD_1
TXD
R6 0R
TXD_1
5V
0R
CP2102_3.3V
3.3V 0R
CP2102_3.3V
TXD
TXD1
TXD
R7 10K
RXD
RXD1
RXD
R8 10K