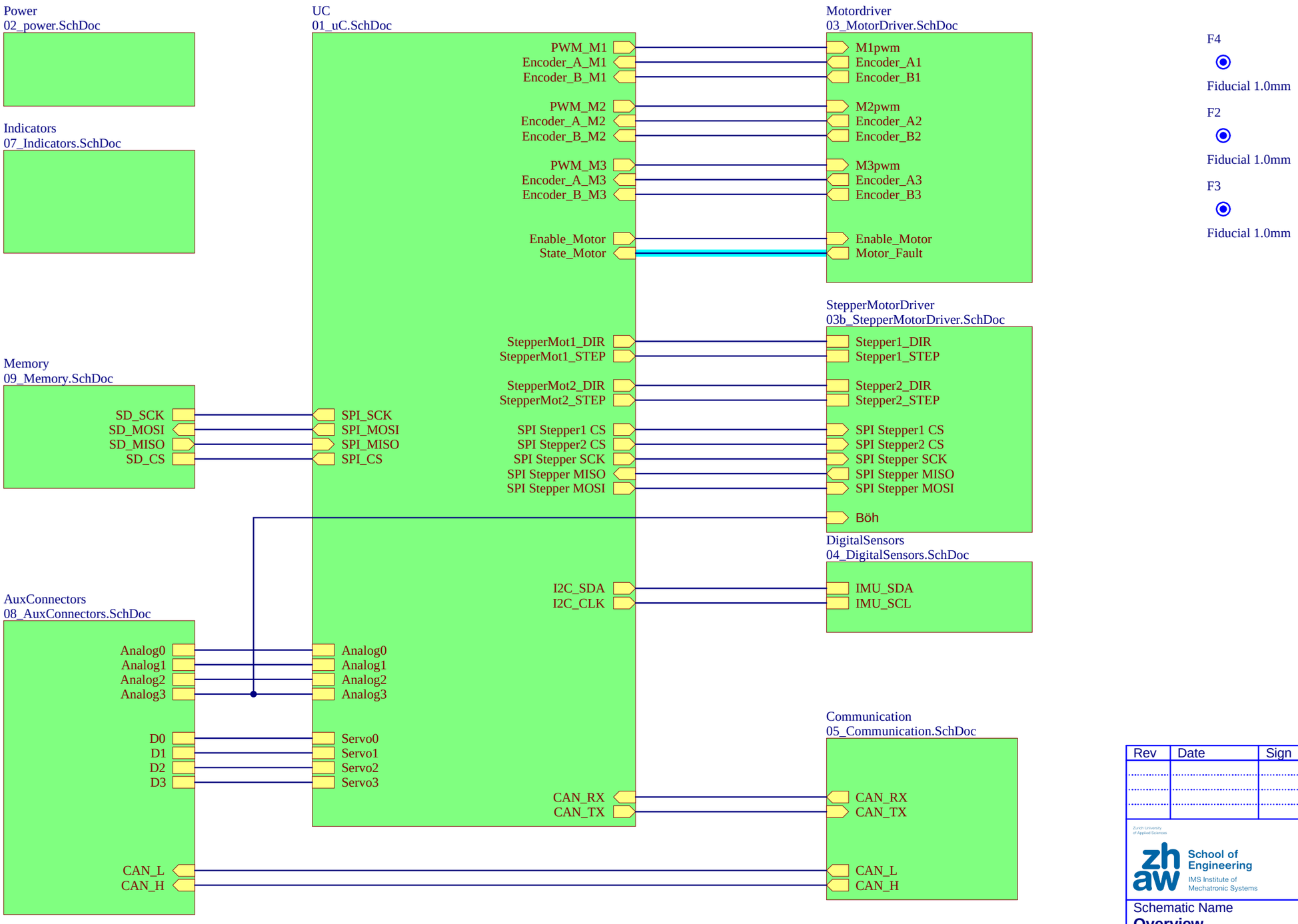

Rev	Date	Sign	Release Notes

Zurich University of Applied Sciences
School of Engineering
IMS Institute of Mechatronic Systems

Zurich University of Applied Sience
IMS - Institute of Mechatronic Systems
Technikumstrasse 7
CH - 8401 Winterthur

Schematic Name	Document Number
Overview	20230901_1

Size	Project Name	Revision
A4	**PES-Board**	V2023

Sheet **1** of **10** | Print date: **04.03.2026** | Drawn by: boro

File: PES_BOARD_V2023.SchDoc

Repo: https://github.com/pichim/PES_Board | Variant: [No Variations]

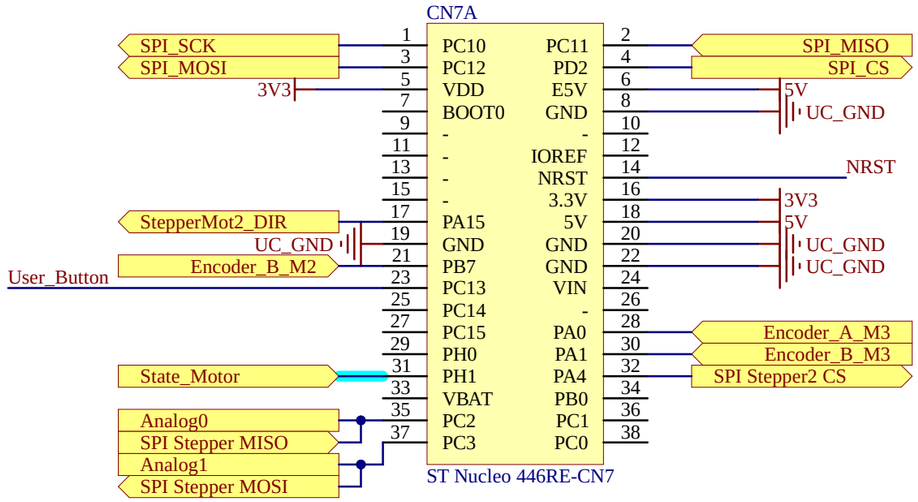

Possible STEP for schrittmotor2

Possible DIR for schrittmotor2 (JTDI--> first test then choose)

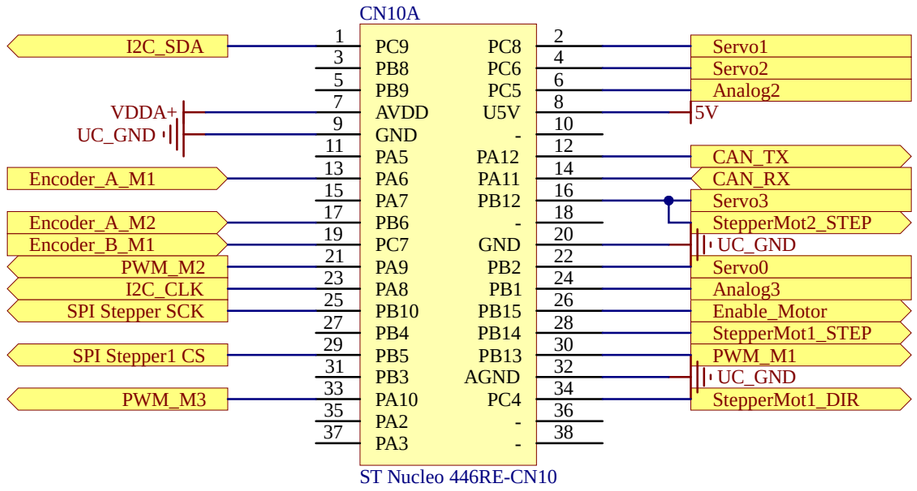

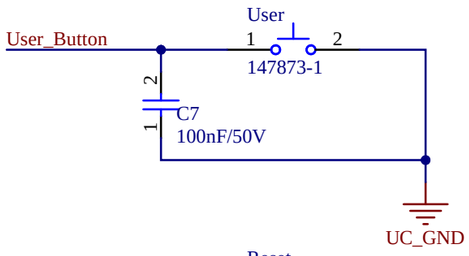

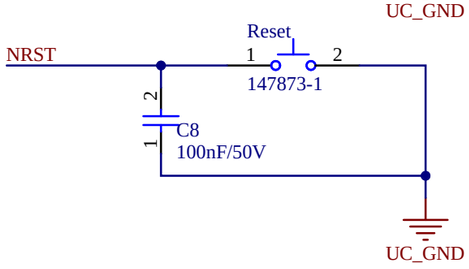

Zurich University of Applied Sience
IMS - Institute of Mechatronic Systems
Technikumstrasse 7
CH - 8401 Winterthur

Schematic Name: uC	Document Number: 20230901_2
Size: A4 / Project Name: PES-Board	Revision: V2023
Sheet 2 of 10 / Print date: 04.03.2026	Drawn by: boro
File: 01_uC.SchDoc	
Repo: https://github.com/pichim/PES_Board	Variant: [No Variations]

Energy supply

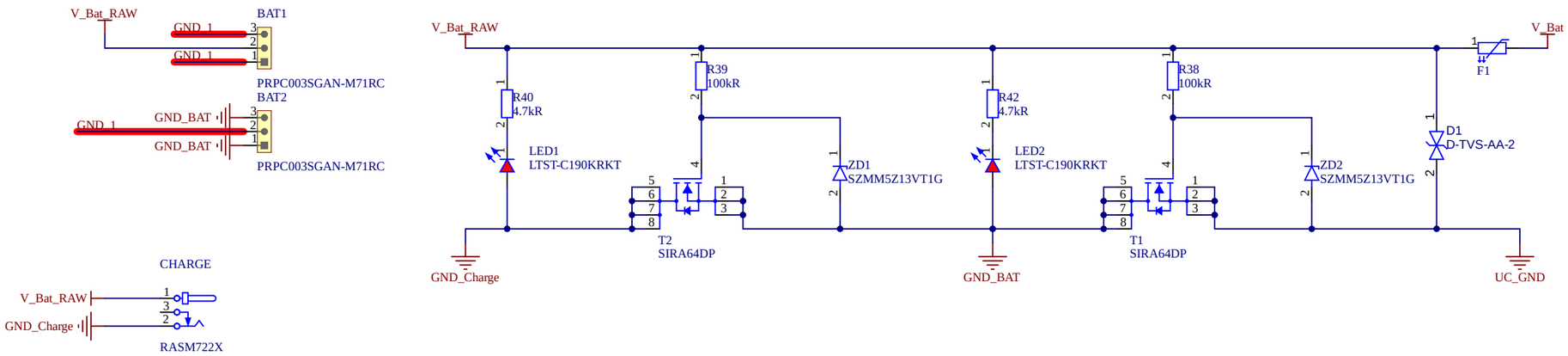

1) TVS für überspannungen von motor schutzen
2) DC/DC wandler? --> warten
3) Kann man die bauteile unten montieren? --> ja

das kann man weglassen

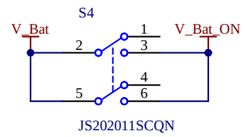

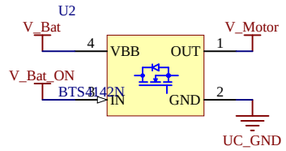

DC/DC Converter

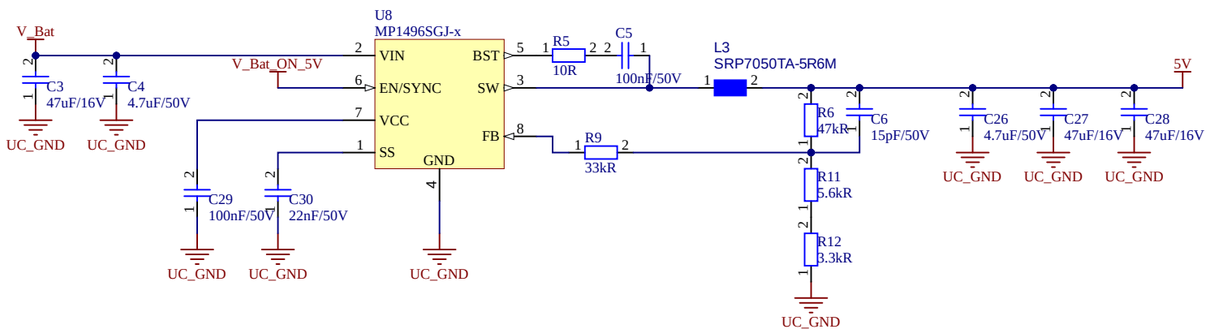

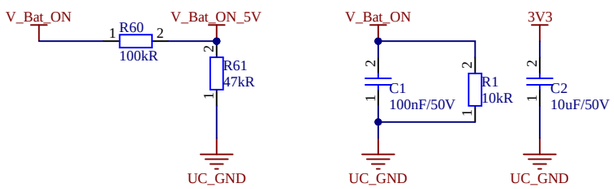

Zurich University of Applied Sciences
School of Engineering
IMS Institute of Mechatronic Systems

Zurich University of Applied Sience
IMS - Institute of Mechatronic Systems
Technikumstrasse 7
CH - 8401 Winterthur

Schematic Name: **Power**	Document Number: 20230901_3
Size: **A3**	Project Name: **PES-Board** — Revision: V2023
Sheet **3** of **10**	Print date: **04.03.2026** — Drawn by: boro
File: 02_power.SchDoc	
Repo: https://github.com/pichim/PES_Board	Variant: [No Variations]

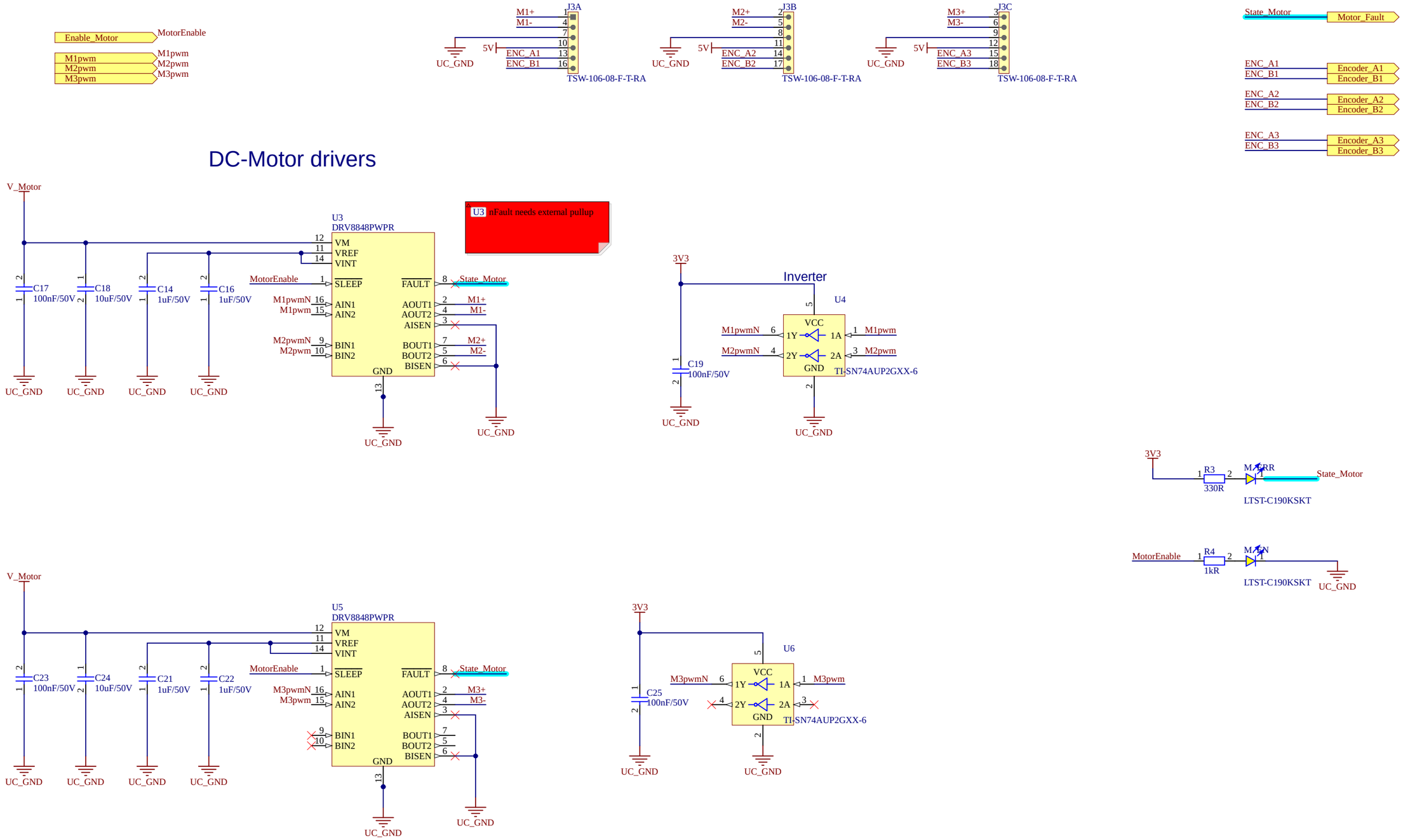

Zurich University of Applied Sience
IMS - Institute of Mechatronic Systems
Technikumstrasse 7
CH - 8401 Winterthur

Schematic Name	Document Number
Motor Driver	20230901_4

Size	Project Name	Revision
A3	**PES-Board**	V2023

Sheet **4** of **10** | Print date: **04.03.2026** | Drawn by: boro

File: 03_MotorDriver.SchDoc

Repo: https://github.com/pichim/PES_Board | Variant: [No Variations]

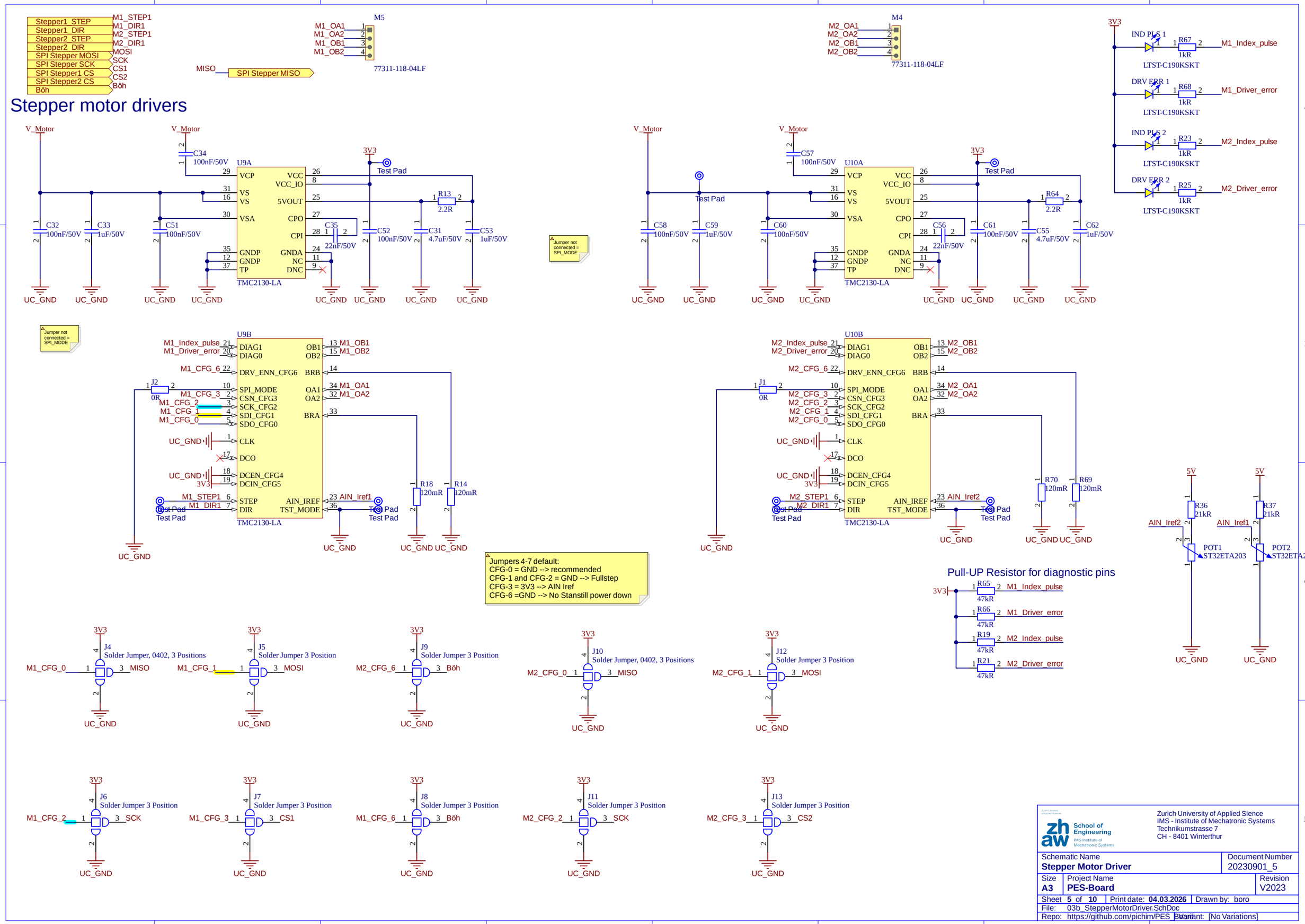

Zurich University of Applied Sciences
School of Engineering
IMS Institute of Mechatronic Systems

Zurich University of Applied Sience
IMS - Institute of Mechatronic Systems
Technikumstrasse 7
CH - 8401 Winterthur

Schematic Name	Document Number
Stepper Motor Driver	20230901_5

Size	Project Name	Revision
A3	**PES-Board**	V2023

Sheet **5** of **10** | Print date: **04.03.2026** | Drawn by: boro

File: 03b_StepperMotorDriver.SchDoc

Repo: https://github.com/pichim/PES_Board | Variant: [No Variations]

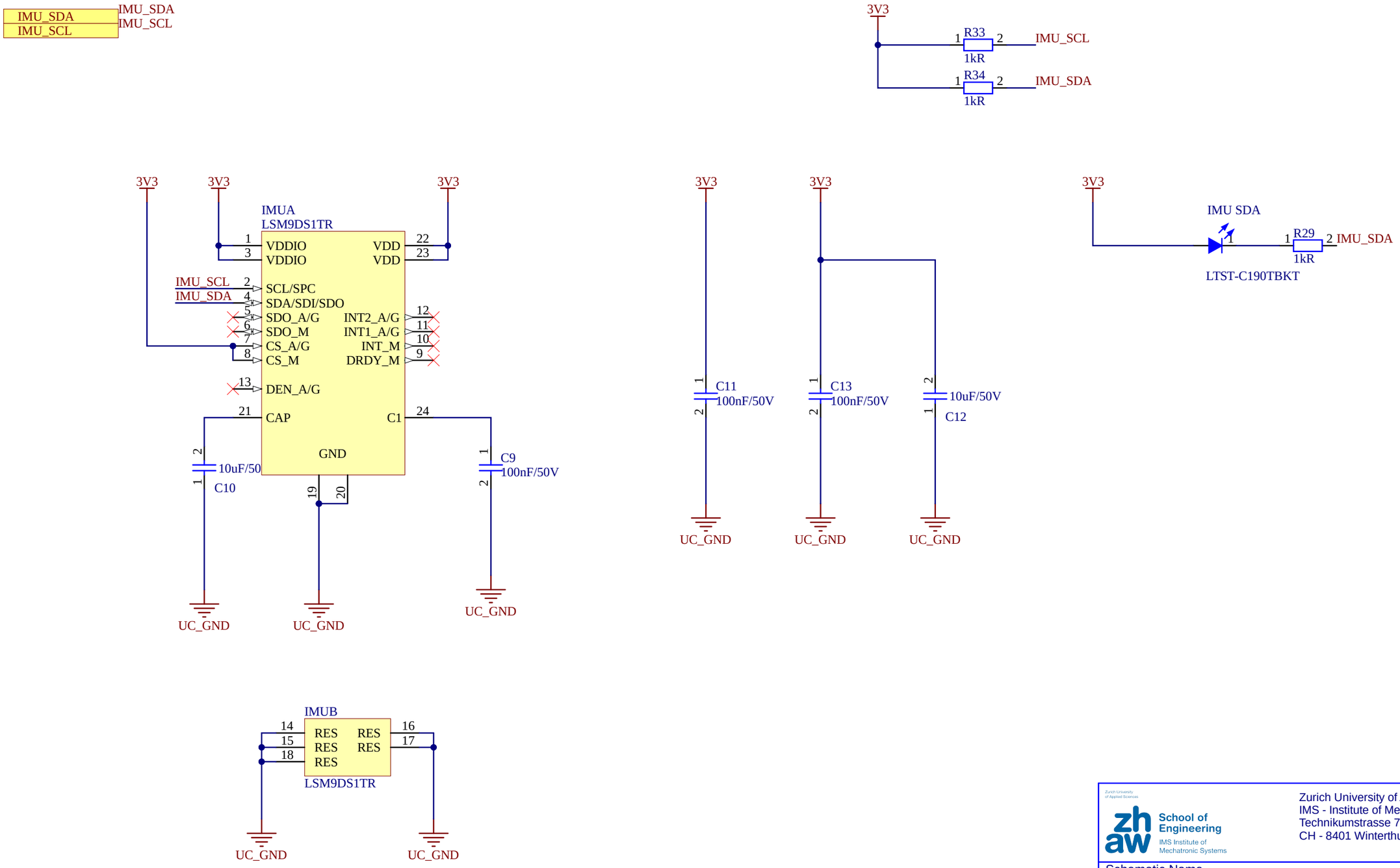

Zurich University of Applied Sciences
School of Engineering
IMS Institute of Mechatronic Systems

Zurich University of Applied Sience
IMS - Institute of Mechatronic Systems
Technikumstrasse 7
CH - 8401 Winterthur

Schematic Name **Digital Sensors**		Document Number 20230901_6
Size **A4**	Project Name **PES-Board**	Revision V2023
Sheet **6** of **10**	Print date: **04.03.2026**	Drawn by: boro
File: 04_DigitalSensors.SchDoc		
Repo: https://github.com/pichim/PES_Board		Variant: [No Variations]

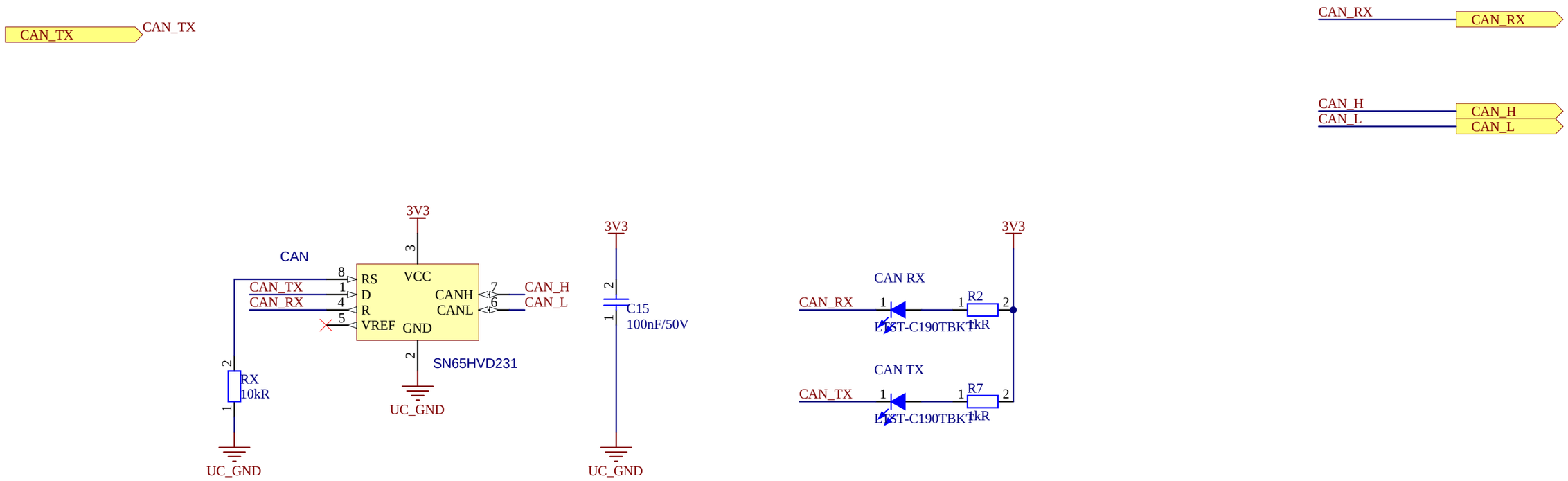

Zurich University of Applied Sciences
School of Engineering
IMS Institute of Mechatronic Systems

Zurich University of Applied Sience
IMS - Institute of Mechatronic Systems
Technikumstrasse 7
CH - 8401 Winterthur

Schematic Name **Communication**	Document Number 20230901_7

Size **A4**	Project Name **PES-Board**	Revision V2023

Sheet **7** of **10**	Print date: **04.03.2026**	Drawn by: boro
File: 05_Communication.SchDoc		
Repo: https://github.com/pichim/PES_Board	Variant: [No Variations]	

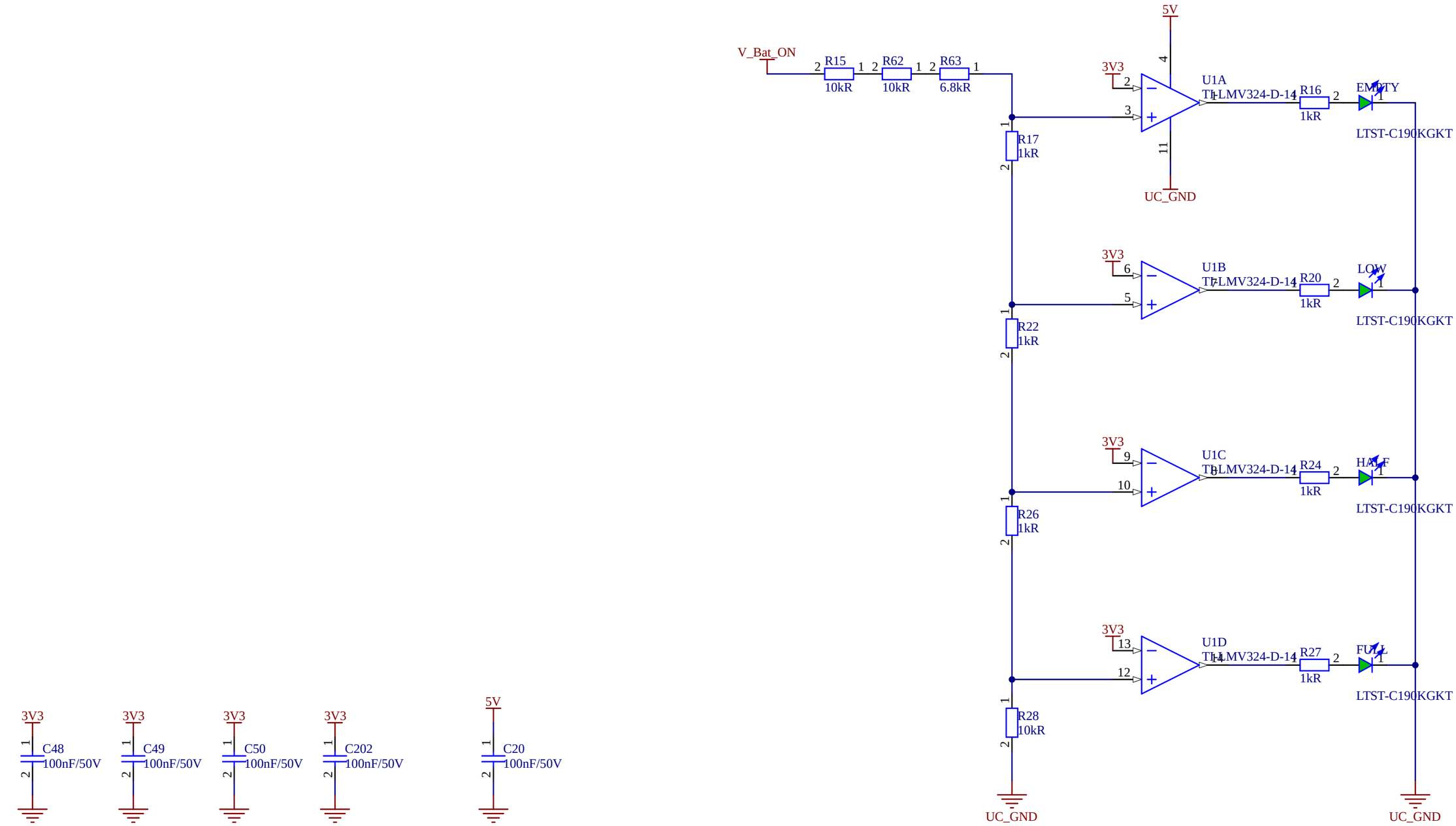

Zurich University of Applied Sciences
School of Engineering
IMS Institute of Mechatronic Systems

Zurich University of Applied Sience
IMS - Institute of Mechatronic Systems
Technikumstrasse 7
CH - 8401 Winterthur

Schematic Name: **Indicators**	Document Number: 20230901_8
Size: **A4** / Project Name: **PES-Board**	Revision: V2023
Sheet **8** of **10**	Print date: **04.03.2026** / Drawn by: boro
File: 07_Indicators.SchDoc	
Repo: https://github.com/pichim/PES_Board	Variant: [No Variations]

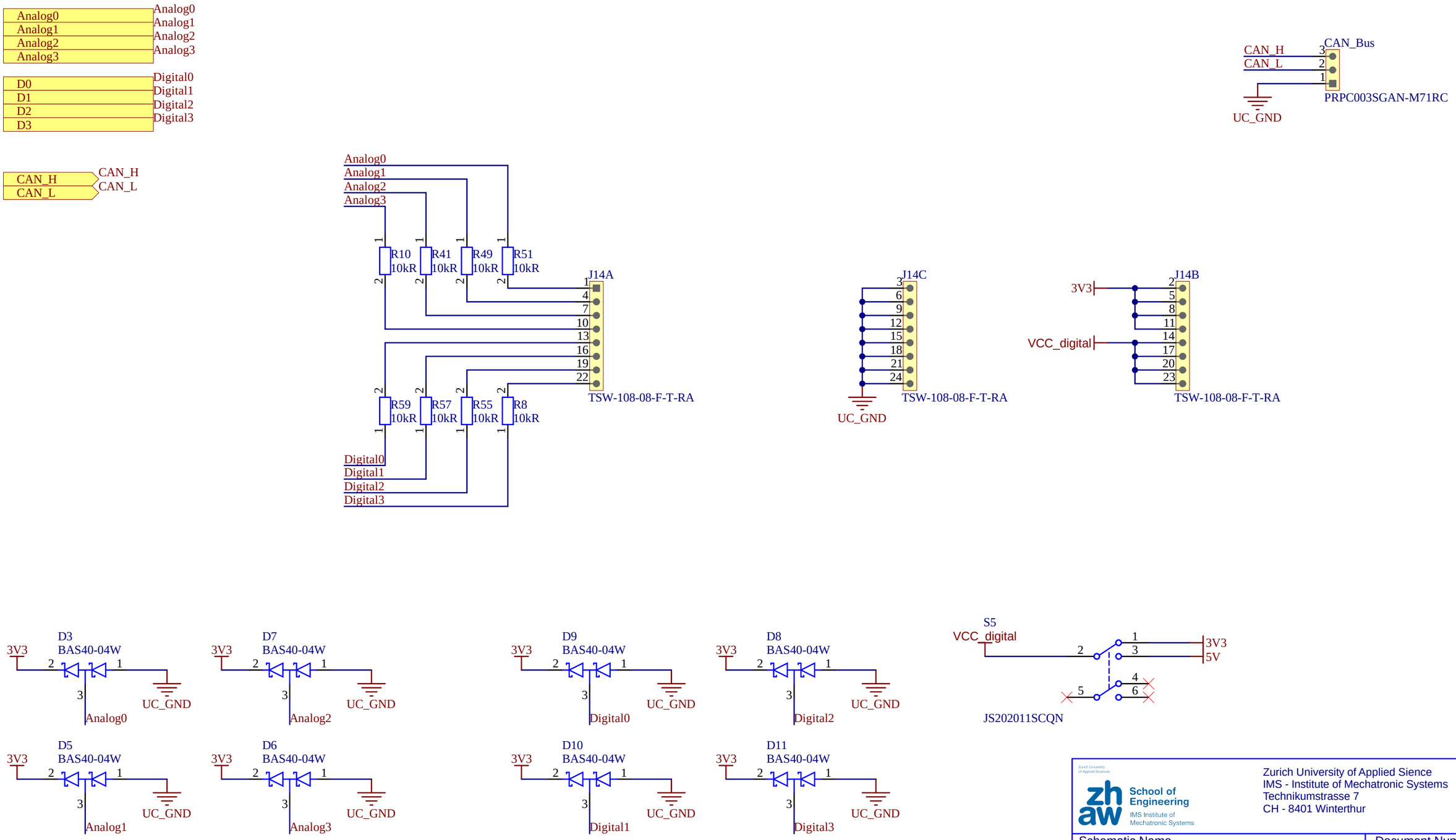

Zurich University of Applied Sciences
School of Engineering
IMS Institute of Mechatronic Systems

Zurich University of Applied Sience
IMS - Institute of Mechatronic Systems
Technikumstrasse 7
CH - 8401 Winterthur

Schematic Name **Aux Connectors**		Document Number 20230901_9
Size **A4**	Project Name **PES-Board**	Revision V2023
Sheet **9** of **10**	Print date: **04.03.2026**	Drawn by: boro
File: 08_AuxConnectors.SchDoc		
Repo: https://github.com/pichim/PES_Board	Variant: [No Variations]	

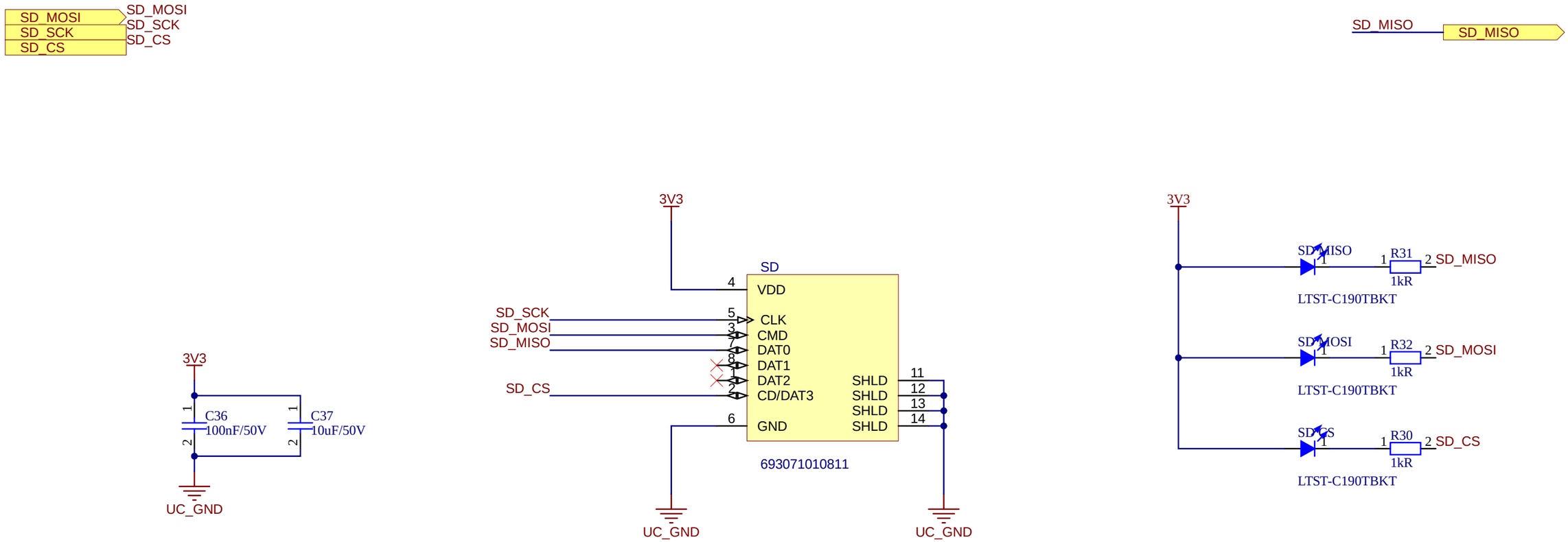

Zurich University of Applied Sciences
School of Engineering
IMS Institute of Mechatronic Systems

Zurich University of Applied Sience
IMS - Institute of Mechatronic Systems
Technikumstrasse 7
CH - 8401 Winterthur

Schematic Name **Memory**	Document Number 20230901_10
Size **A4**	Project Name **PES-Board**	Revision V2023
Sheet **10** of **10**	Print date: **04.03.2026**	Drawn by: boro
File: 09_Memory.SchDoc	
Repo: https://github.com/pichim/PES_board	Variant: [No Variations]