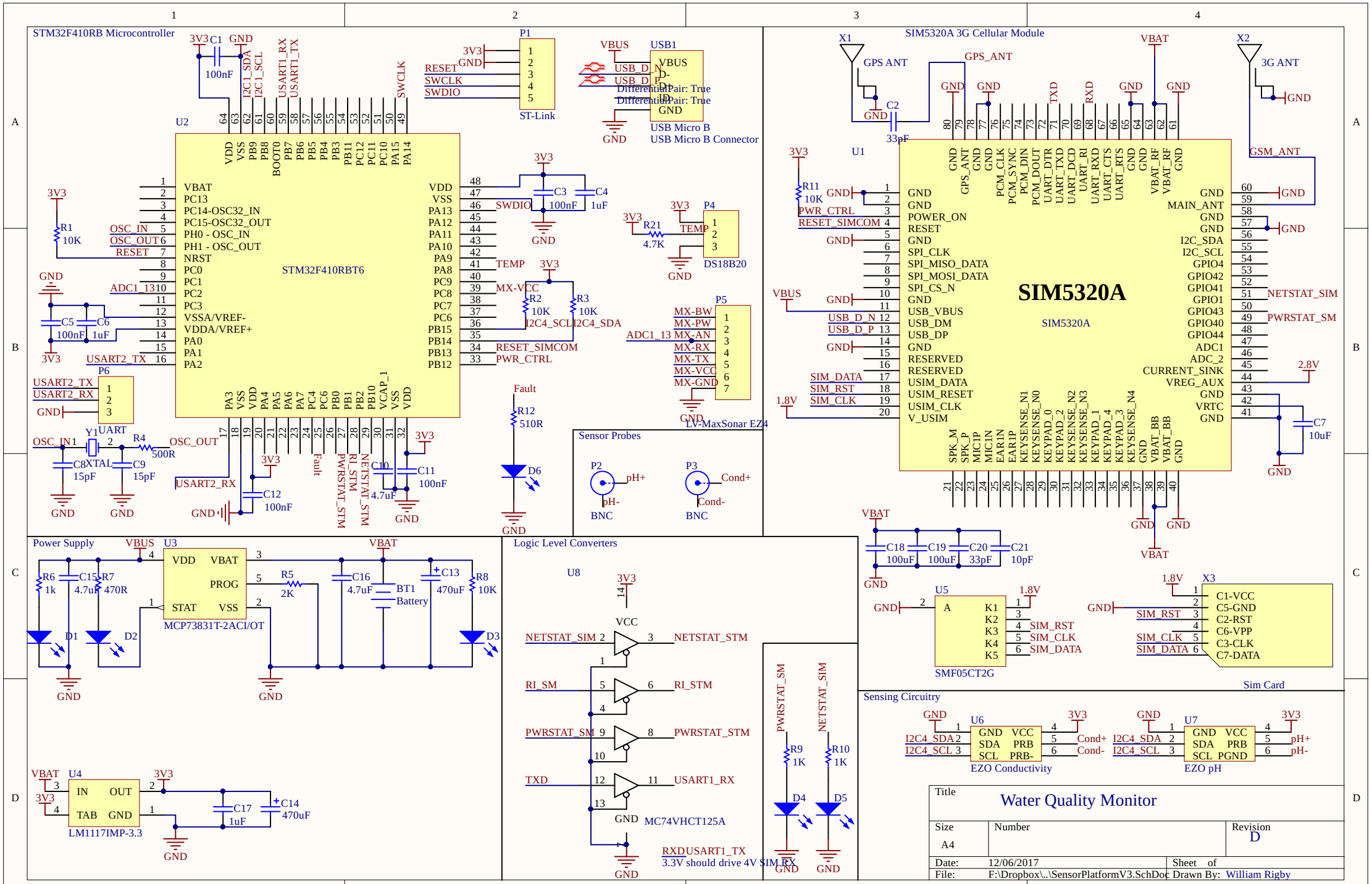
STM32F410RB Microcontroller
U2
STM32F410RBT6
VBAT
PC13
PC14-OSC32_IN
PC15-OSC32_OUT
PH0 - OSC_IN
PH1 - OSC_OUT
NRST
PC0
PC1
PC2
PC3
VSSA/VREF-
VDDA/VREF+
PA0
PA1
PA2
VDD
VSS
PA13
PA12
PA11
PA10
PA9
PA8
PC9
PC8
PC7
PC6
PB15
PB14
PB13
PB12
PA3
PA4
PA5
PA6
PA7
PC4
PC5
PB0
PB1
PB2
PB10
VCAP_1
OSC_IN
OSC_OUT
RESET
ADC1_13
USART2_TX
USART2_RX
SWDIO
TEMP
MX-VCC
I2C4_SCL
I2C4_SDA
RESET_SIMCOM
PWR_CTRL
Fault
PWRSTAT_STM
RI_STM
NETSTAT_STM
USART2_RX
P1
ST-Link
USB1
USB Micro B
USB Micro B Connector
Differential Pair: True
P4
DS18B20
P5
LV-MaxSonar EZ4
MX-BW
MX-PW
MX-AN
MX-RX
MX-TX
MX-VCC
MX-GND
P6
Sensor Probes
P2
pH+
pH-
BNC
P3
Cond+
Cond-
BNC
SIM5320A 3G Cellular Module
X1
GPS ANT
X2
3G ANT
GSM_ANT
U1
SIM5320A
POWER_ON
RESET
SPI_CLK
SPI_MISO_DATA
SPI_MOSI_DATA
SPI_CS_N
USB_VBUS
USB_DM
USB_DP
RESERVED
USIM_DATA
USIM_RESET
USIM_CLK
V_USIM
MAIN_ANT
I2C_SDA
I2C_SCL
GPIO4
GPIO42
GPIO41
GPIO1
GPIO43
GPIO40
GPIO44
ADC1
ADC_2
CURRENT_SINK
VREG_AUX
VRTC
NETSTAT_SIM
PWRSTAT_SM
SIM_DATA
SIM_RST
SIM_CLK
Power Supply
U3
MCP73831T-2ACI/OT
VDD
VBAT
PROG
STAT
VSS
BT1
Battery
U4
LM1117IMP-3.3
IN
OUT
TAB
GND
Logic Level Converters
U8
MC74VHCT125A
NETSTAT_SIM
NETSTAT_STM
RI_SM
RI_STM
PWRSTAT_SM
PWRSTAT_STM
TXD
USART1_RX
RXD USART1_TX
3.3V should drive 4V SIM RX
U5
SMF05CT2G
X3
Sim Card
C1-VCC
C5-GND
C2-RST
C6-VPP
C3-CLK
C7-DATA
Sensing Circuitry
U6
EZO Conductivity
U7
EZO pH
Cond+
Cond-
pH+
pH-
Title
Water Quality Monitor
Size
A4
Number
Revision
D
Date:
12/06/2017
Sheet of
File:
F:\Dropbox\..\SensorPlatformV3.SchDoc
Drawn By:
William Rigby