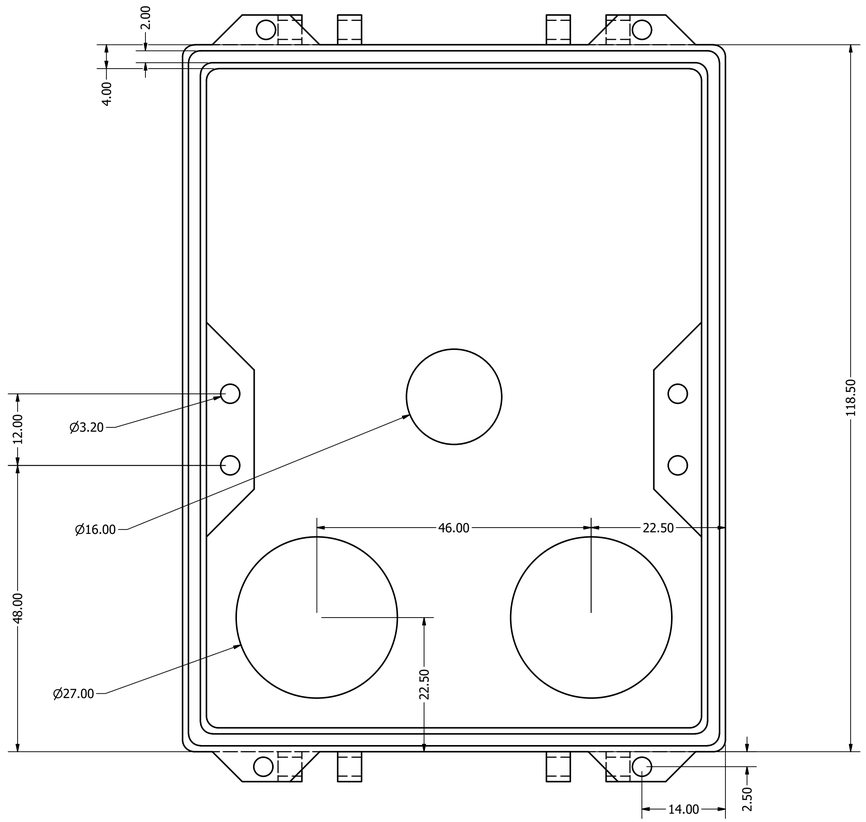

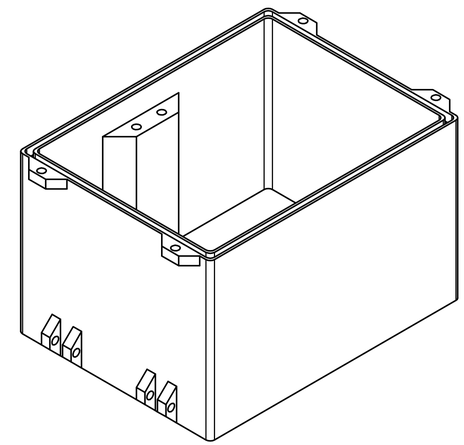

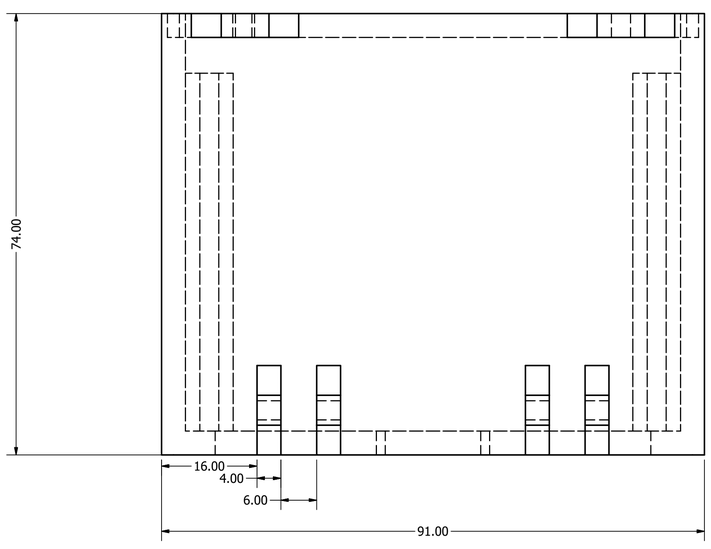

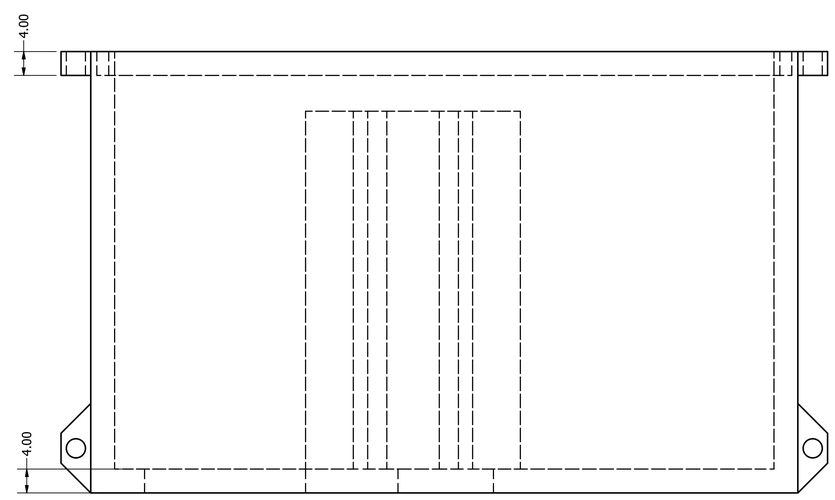

DRAWN William Rigby	12/06/2017	University of Queensland
CHECKED		TITLE
QA		Housing Base
MFG		
APPROVED		
		SIZE D / DWG NO / REV
		SCALE 2 : 1 / SHEET 1 OF 1