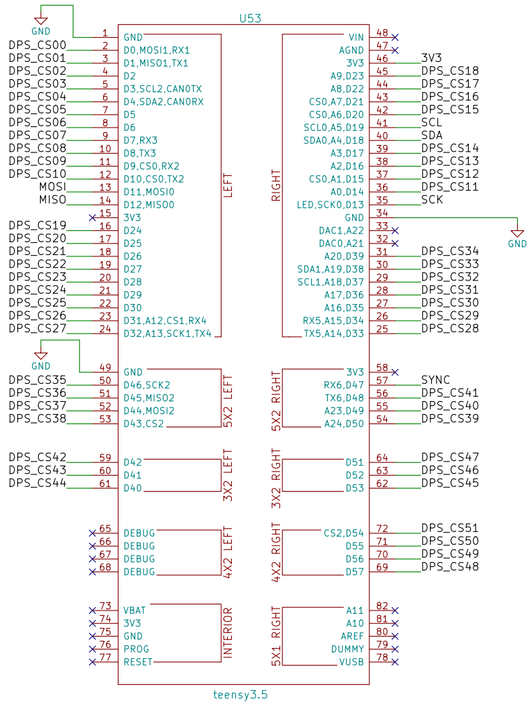

INERTIAL MEASUREMENT UNIT

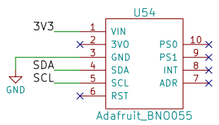

SYNC/TRIGGER INPUT

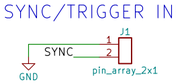

JST PH SERIES
DIGIKEY PN 455-1719-ND
SPARKFUN PN PRT-09749

PRESSURE SENSORS

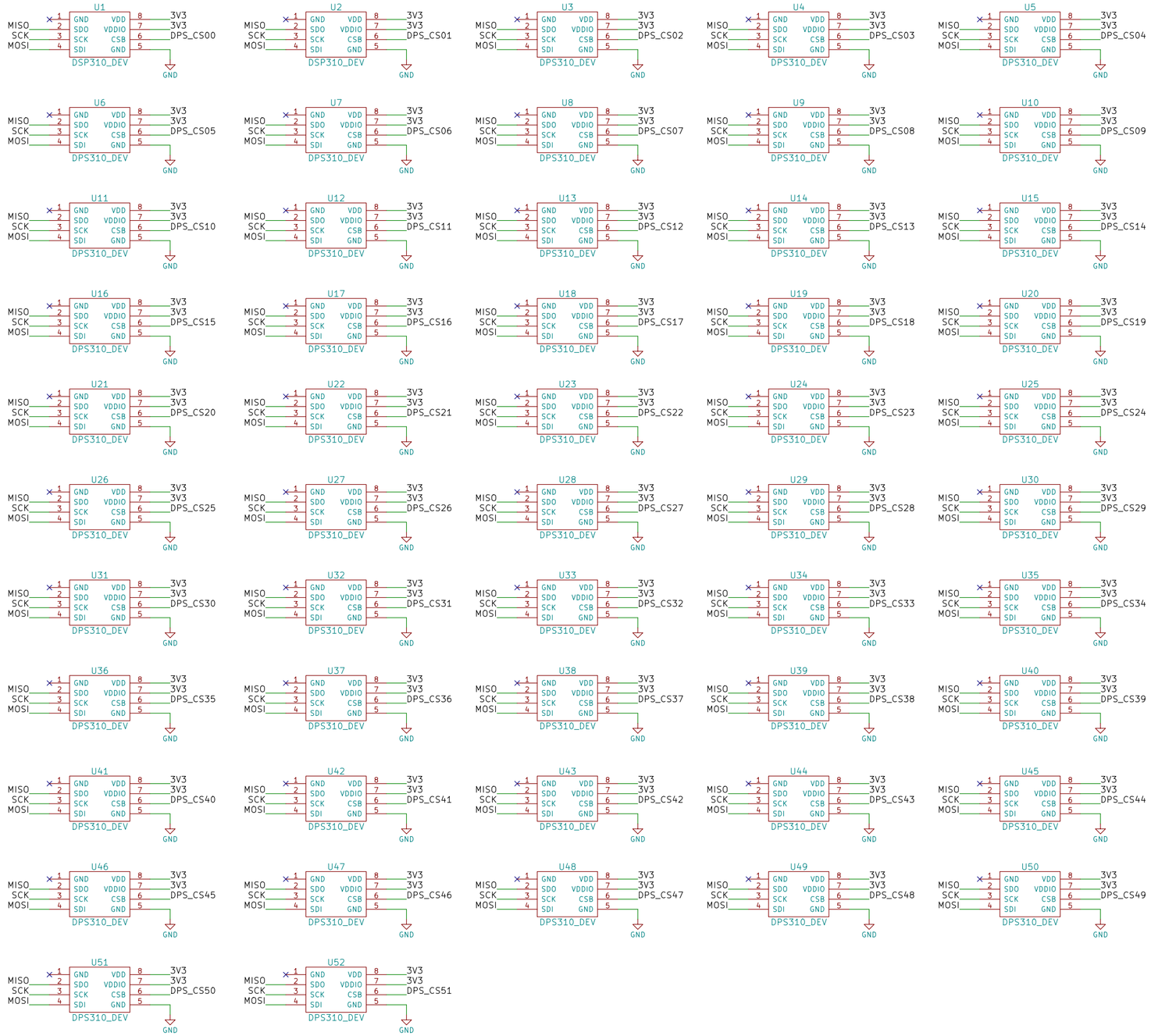

Sheet: /
File: wing.sch

Title:

Size: User	Date:	Rev:
KiCad E.D.A. kicad 4.0.7-e2-637658ubuntu16.04.1		Id: 1/1