REVISIONS				
ZONE	REV	DESCRIPTION	DATE	APPROVED

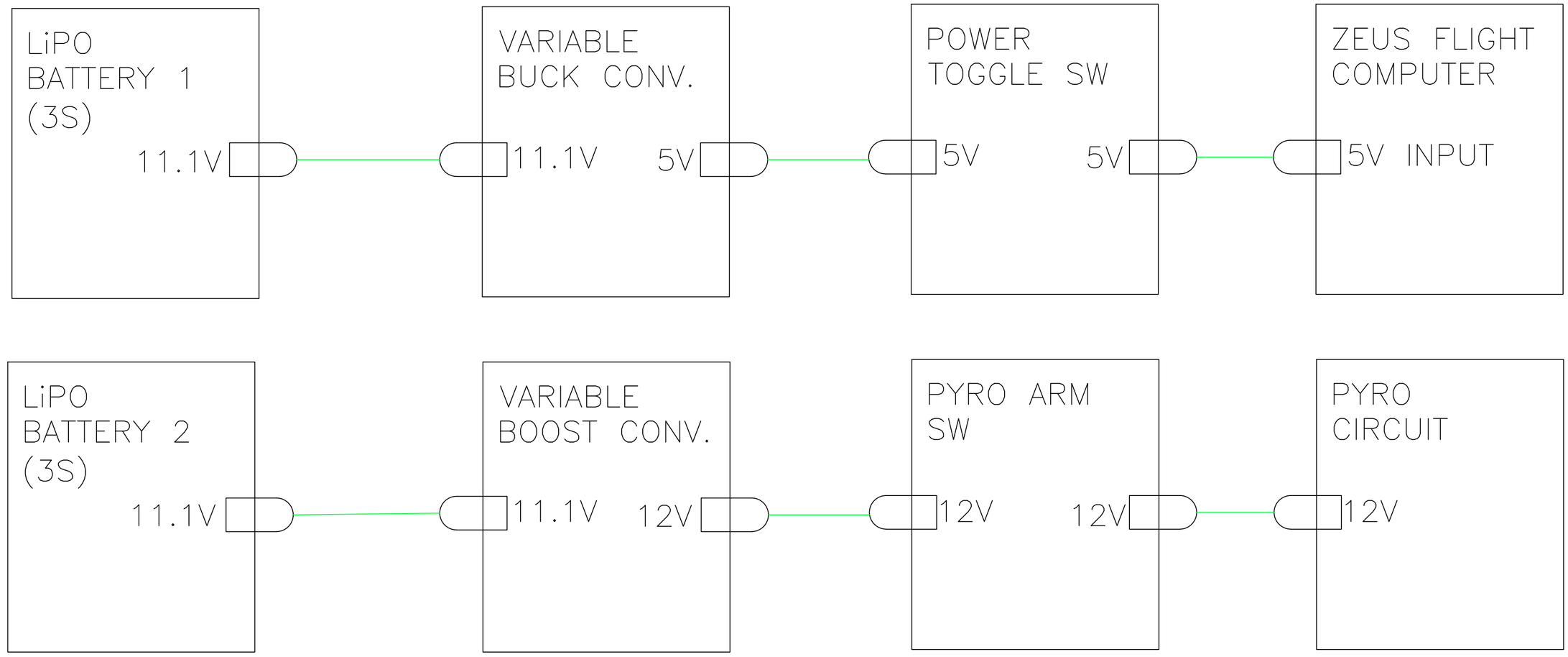

FILE NAME power_system_diagram.dwg	
CONTRACT NO N/A	
DRAWN 6/21/2026	SYSTEM DIAGRAM: POWER
CHECK	
APPR.	
ISSUED	
	SIZE / FSCM NO – / DWG NO ZEUS–01 / REV
	SCALE 1:1 / WEIGHT / SHEET 1

REVISIONS				
ZONE	REV	DESCRIPTION	DATE	APPROVED

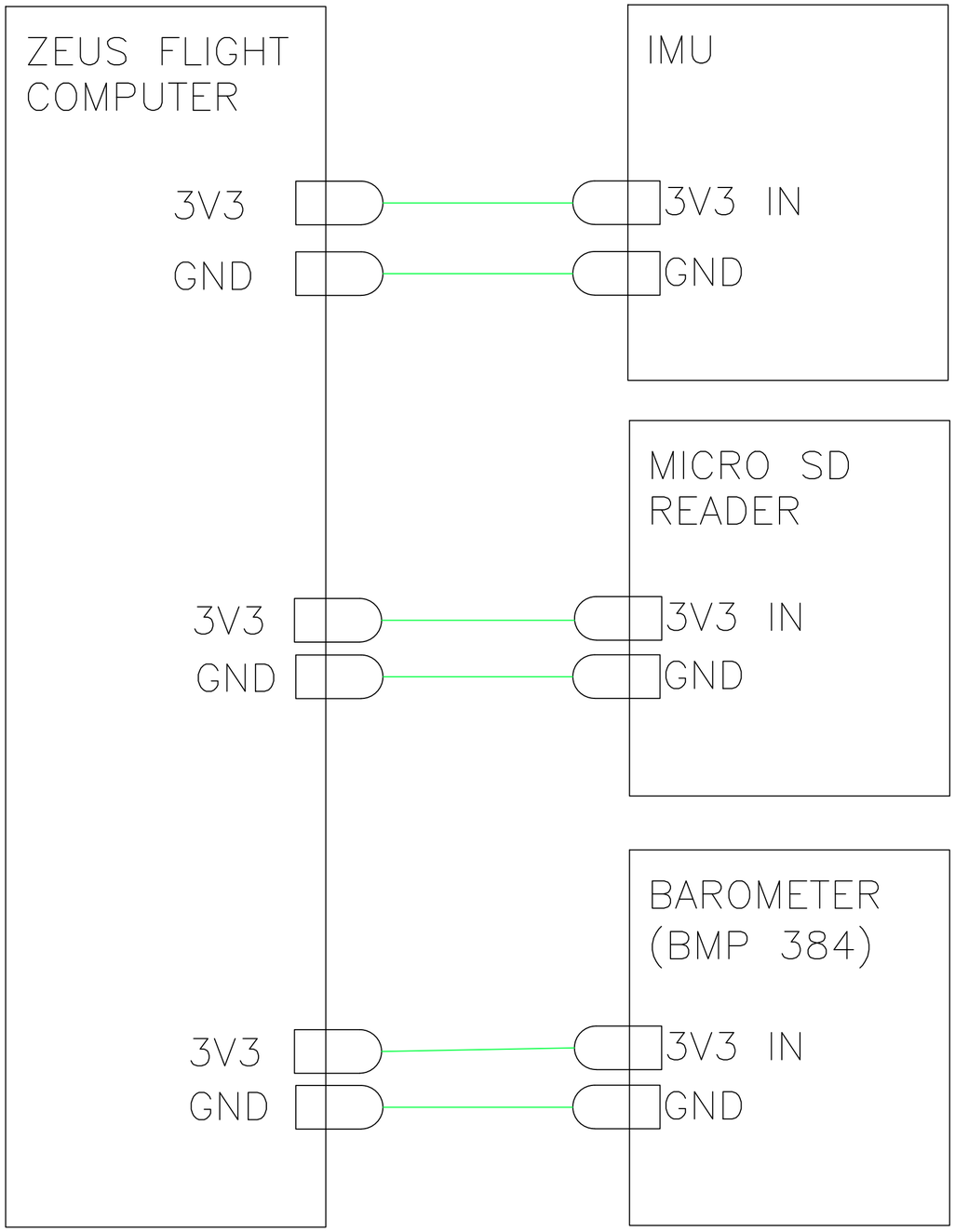

FILE NAME power_system_diagram.dwg	
CONTRACT NO N/A	
DRAWN 6/21/2026	SYSTEM DIAGRAM: POWER
CHECK	
APPR.	
ISSUED	
	SIZE – / FSCM NO – / DWG NO ZEUS–01 / REV
	SCALE 1:1 / WEIGHT / SHEET 1

REVISIONS				
ZONE	REV	DESCRIPTION	DATE	APPROVED

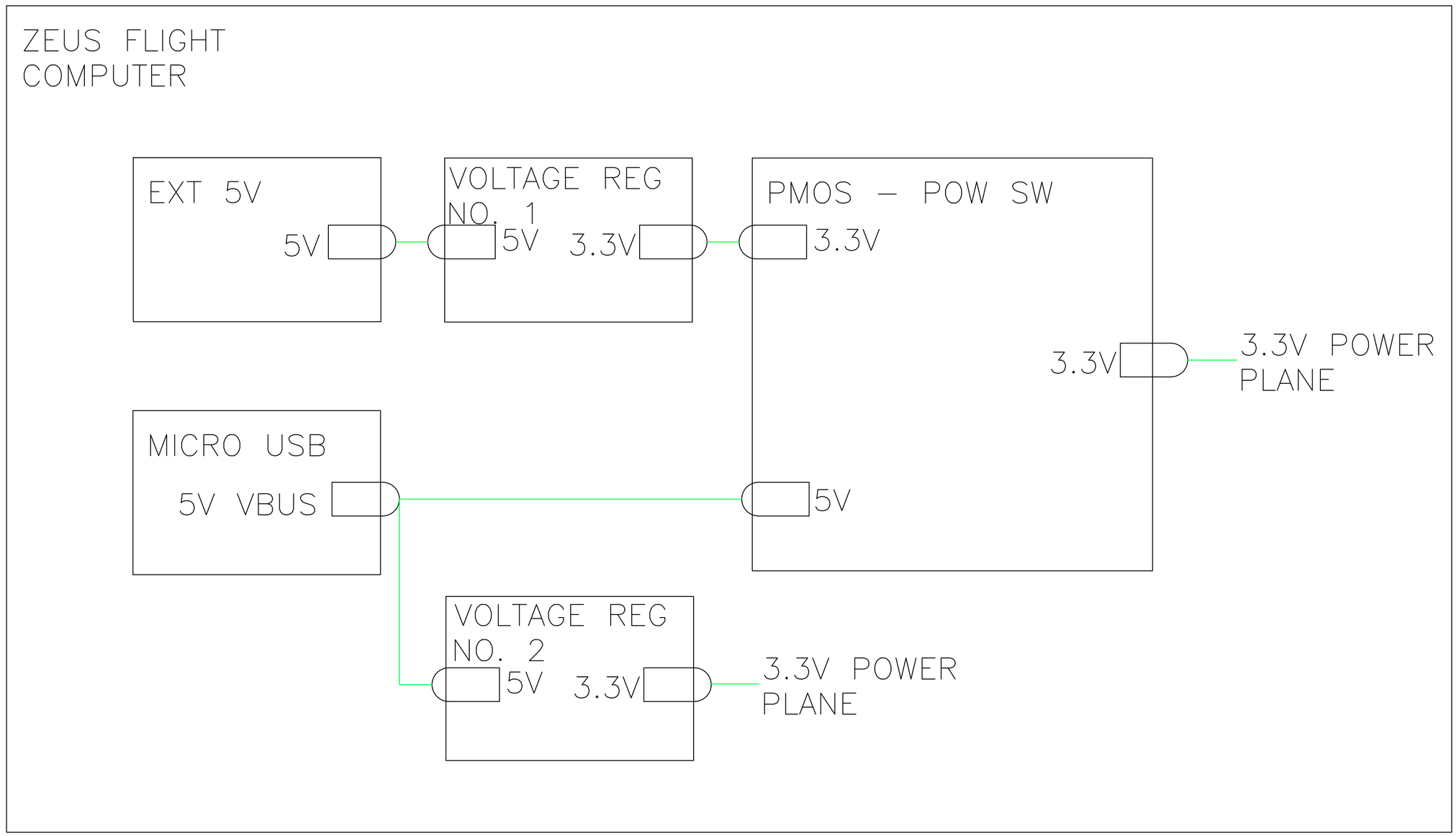

Note: EXT 5V is always plugged in, so when Micro–USB is plugged in, PMOS shuts off, power is routed to voltage regulator 2 to 3v3. When Micro–USB isn't plugged in, PMOS turns on, power routed from LiPO to voltage regulator 1 to 3v3 power plane.

FILE NAME power_system_diagram.dwg	
CONTRACT NO N/A	
DRAWN 6/21/2026	SYSTEM DIAGRAM: POWER
CHECK	
APPR.	
ISSUED	
	SIZE – / FSCM NO – / DWG NO ZEUS–01 / REV
	SCALE 1:1 / WEIGHT / SHEET 1