| REVISION RECORD | | | |
|---|---|---|---|
| LTR | ECO NO: | APPROVED: | DATE: |
| | | | |
| | | | |
| | | | |
| | | | |

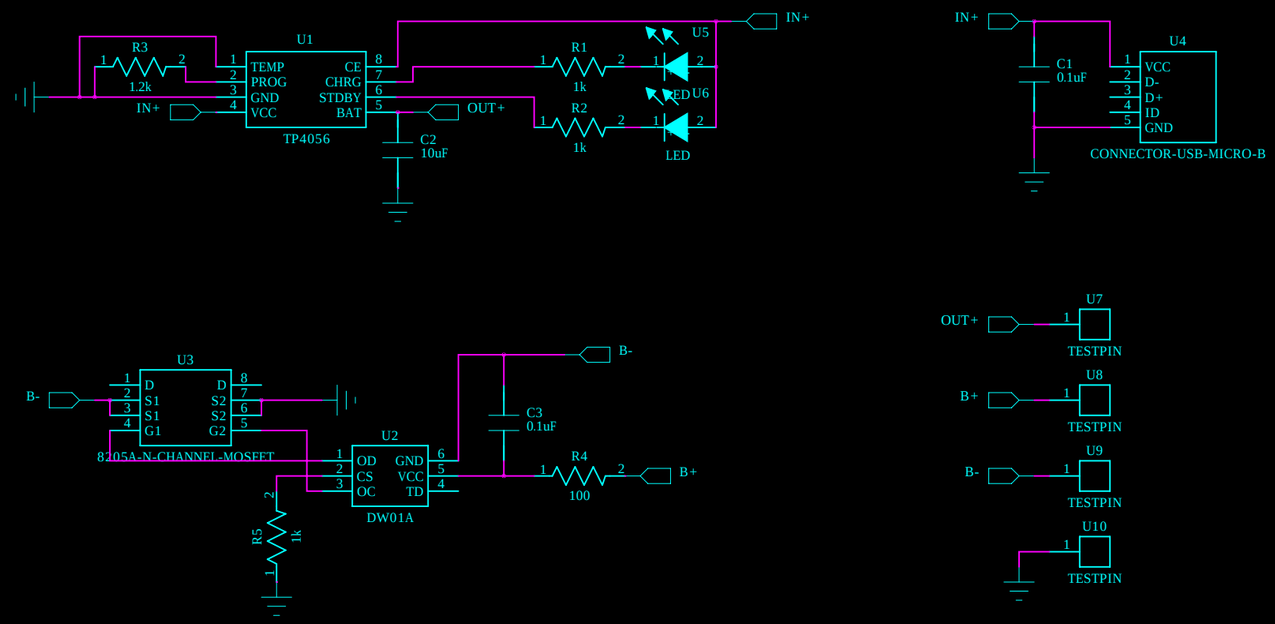


| | | | |
|---|---|---|---|
| DRAWN: <Drawn By> | DATED: <Drawn Date> | COMPANY: william | |
| CHECKED: <Checked By> | DATED: <Checked Date> | TITLE: USB charging protect circuit | |
| QUALITY CONTROL: <QC By> | DATED: <QC Date> | CODE: <Code> | SIZE: B |
| RELEASED: <Released By> | DATED: <Release Date> | DRAWING NO: 1 | REV: <Revision> |
| | | SCALE: <Scale> | SHEET: 1 OF 1 |