Estimating lengths from scale drawings and photos — Excellence

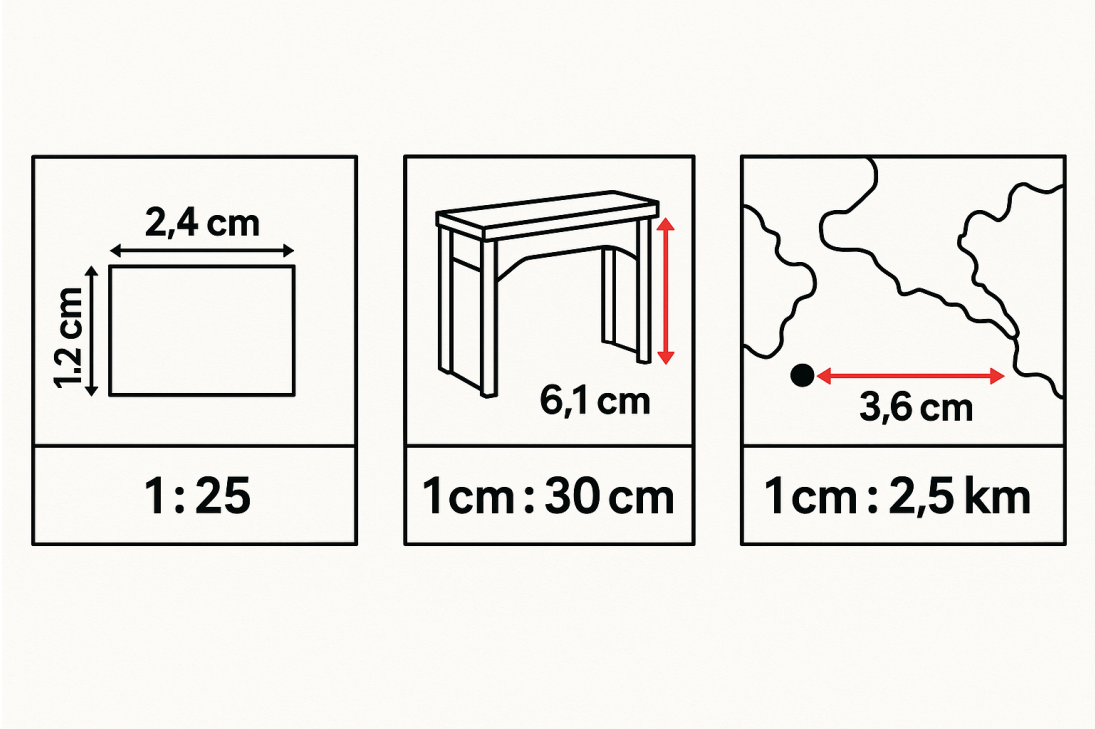

1. Use the sign drawing to estimate the real dimensions in cm. Then say whether doubling both drawing lengths would double the real size.

2. Use the cabinet measurements to estimate the real cabinet height. Then decide whether 14 m is clearly wrong.

3. Use the map to estimate the real distance between the two marked points. Then decide whether 9 km is a fair estimate.

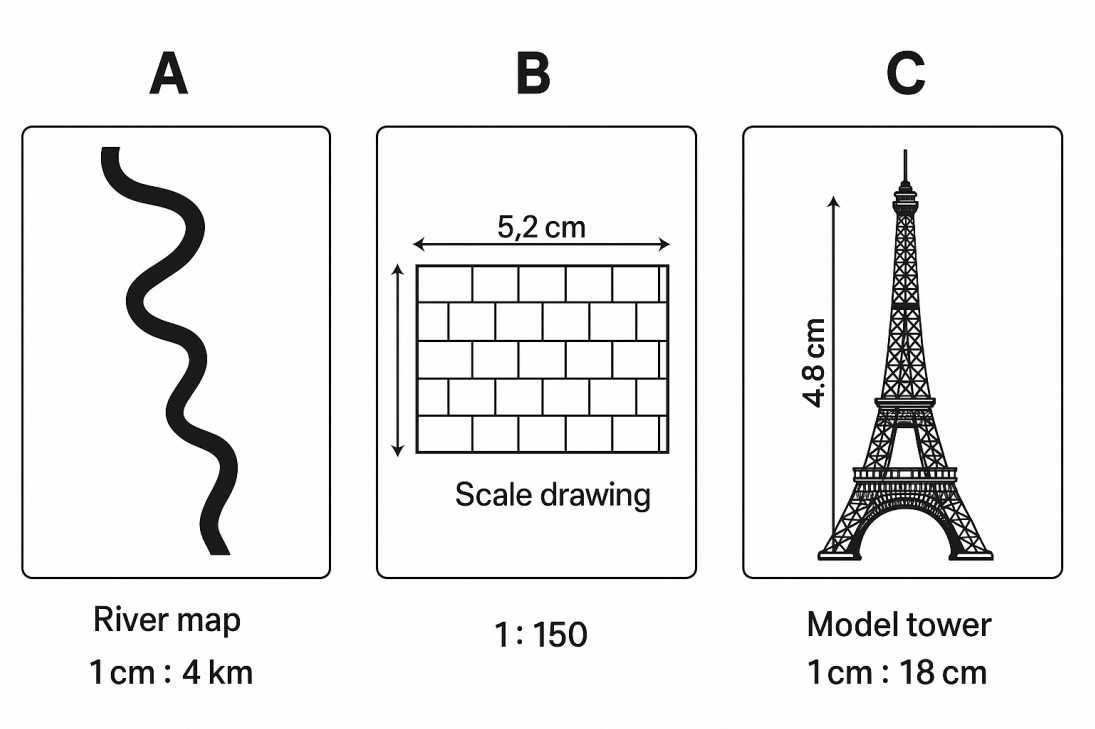

4. Use the river map to estimate the real river length and explain whether 12 km is reasonable.

5. Use the patio drawing to estimate the real dimensions in metres.

6. Use the tower measurements to estimate the real tower height and round to the nearest cm.

7. A student says a gate drawn as 1.6 cm on a $1 : 200$ scale must be 1.6 m wide. Explain the mistake and give a better estimate.

8. A photo scale is 1 cm : 30 cm. An object is 6.1 cm tall in the photo. Estimate the real height and state it in metres.