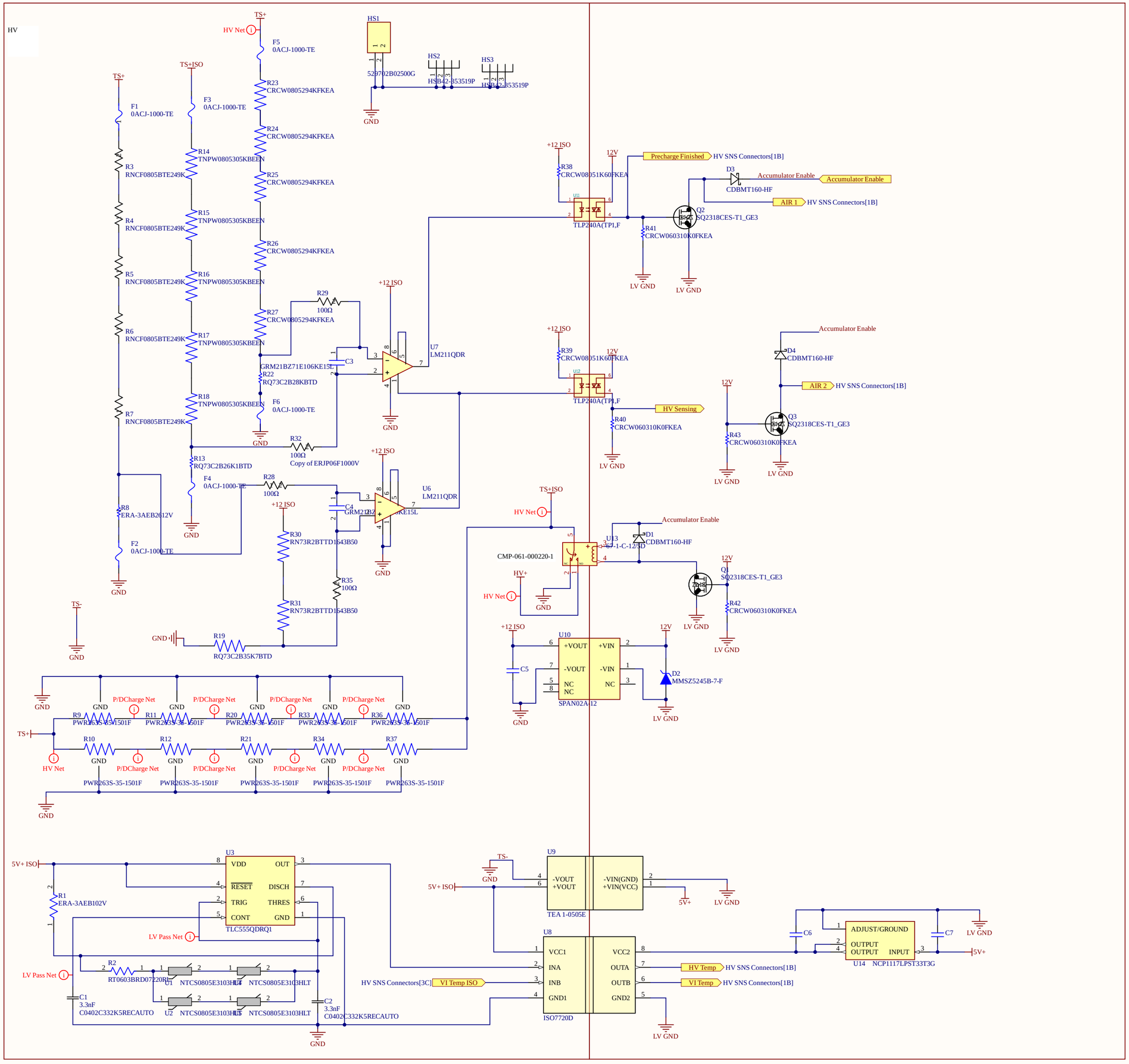
HV
LV
TS+
HV Net
F5
0ACJ-1000-TE
TS+ISO
F1
0ACJ-1000-TE
F3
0ACJ-1000-TE
R23
CRCW0805294KFKEA
R24
CRCW0805294KFKEA
R25
CRCW0805294KFKEA
R26
CRCW0805294KFKEA
R27
CRCW0805294KFKEA
R3
RNCF0805BTE249K
R4
RNCF0805BTE249K
R5
RNCF0805BTE249K
R6
RNCF0805BTE249K
R7
RNCF0805BTE249K
R14
TNPW0805305KBEEN
R15
TNPW0805305KBEEN
R16
TNPW0805305KBEEN
R17
TNPW0805305KBEEN
R18
TNPW0805305KBEEN
R13
RQ73C2B26K1BTD
F4
0ACJ-1000-TE
R8
ERA-3AEB2612V
F2
0ACJ-1000-TE
GND
HS1
529702B02500G
HS2
HSB42-353519P
HS3
HSB42-353519P
R29
100Ω
C3
GRM21BZ71E106KE15L
R22
RQ73C2B28KBTD
F6
0ACJ-1000-TE
R32
100Ω
Copy of ERJP06F1000V
+12 ISO
U7
LM211QDR
R28
100Ω
C4
GRM21BZ71E106KE15L
U6
LM211QDR
R30
RN73R2BTTD1643B50
R31
RN73R2BTTD1643B50
R35
100Ω
TS-
R19
RQ73C2B35K7BTD
R38
CRCW080510K0FKEA
U11
TLP240A(TP1,F
Precharge Finished
HV SNS Connectors[1B]
D3
CDBMT160-HF
Accumulator Enable
AIR 1
Q2
SQ2318CES-T1_GE3
R41
CRCW060310K0FKEA
12V
LV GND
R39
CRCW080510K0FKEA
U12
TLP240A(TP1,F
HV Sensing
R40
CRCW060310K0FKEA
D4
CDBMT160-HF
AIR 2
Q3
SQ2318CES-T1_GE3
R43
CRCW060310K0FKEA
U13
CMP-061-000220-1
D1
CDBMT160-HF
HV+
Q1
SQ2318CES-T1_GE3
R42
CRCW060310K0FKEA
U10
SPAN02A-12
+VOUT
-VOUT
NC
+VIN
-VIN
C5
D2
MMSZ5245B-7-F
P/DCharge Net
R9
R10
R11
R12
R20
R21
R33
R34
R36
R37
PWR263S-35-1501F
5V+ ISO
U3
TLC555QDRQ1
VDD
OUT
RESET
DISCH
TRIG
THRES
CONT
GND
R1
ERA-3AEB102V
LV Pass Net
R2
RT0603BRD07220RL
U1
NTCS0805E3103HLT
U2
NTCS0805E3103HLT
C1
3.3nF
C0402C332K5RECAUTO
C2
3.3nF
C0402C332K5RECAUTO
U9
TEA 1-0505E
-VOUT
+VOUT
-VIN(GND)
+VIN(VCC)
5V+
U8
ISO7720D
VCC1
INA
INB
GND1
VCC2
OUTA
OUTB
GND2
HV SNS Connectors[3C]
VI Temp ISO
HV Temp
VI Temp
C6
C7
U14
NCP1117LPST33T3G
ADJUST/GROUND
OUTPUT
INPUT

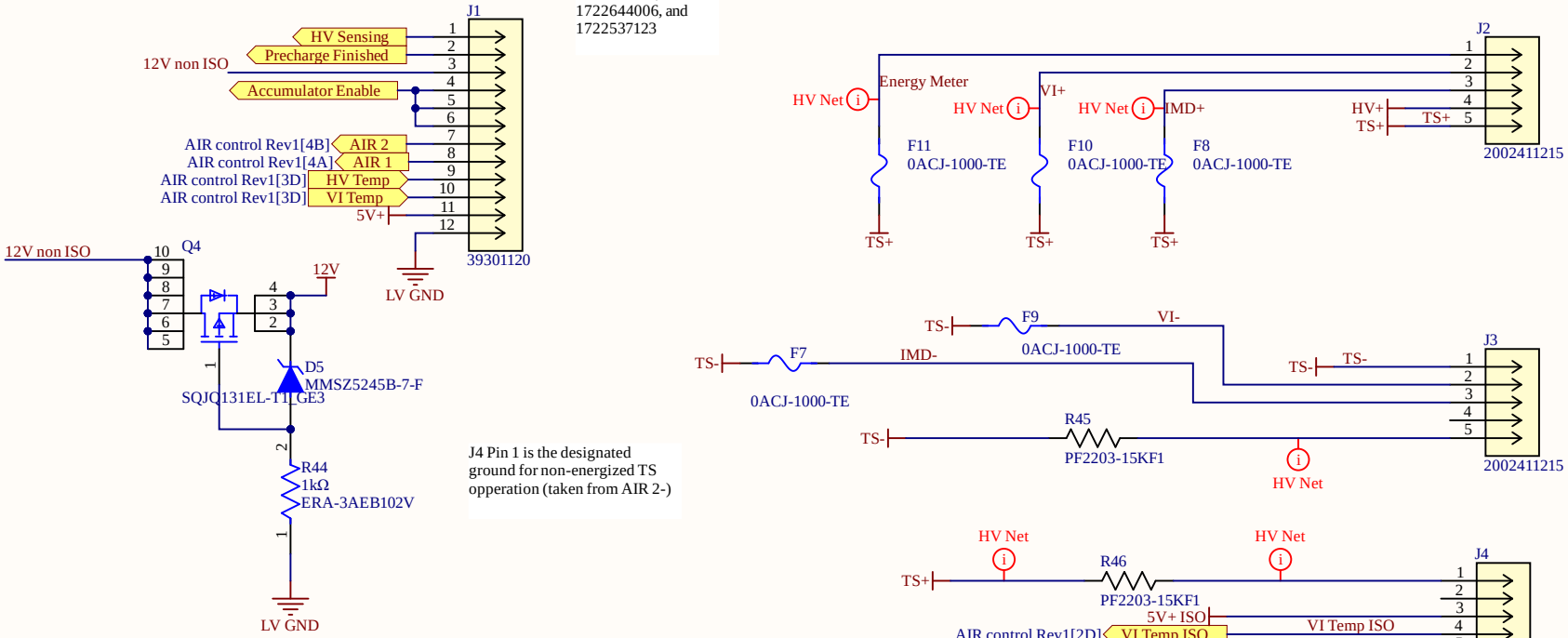

M1A Mounting_Hole_M4

M2A Mounting_Hole_M4

M3A Mounting_Hole_M4

M4A Mounting_Hole_M4

M5A Mounting_Hole_M4

M6A Mounting_Hole_M4

Title		
Size A	Number	Revision
Date: 5/03/2026		Sheet of
File: HV SNS Connectors.SchDoc		Drawn By: