http://www.xiaoyu163.com

Pioneer

Service Manual

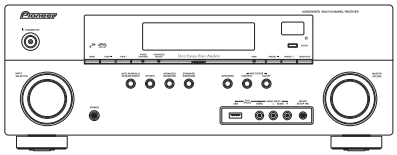

VSX-1019AH-K

ORDER NO.
RRV3900

AUDIO/VIDEO MULTI-CHANNEL RECEIVER

VSX-1019AH-K
VSX-919AH-K

THIS MANUAL IS APPLICABLE TO THE FOLLOWING MODEL(S) AND TYPE(S).

Model	Type	Power Requirement	Remarks
VSX-1019AH-K	UXJCA	AC 120 V	
VSX-919AH-K	CUXJCA	AC 120 V	

For details, refer to "Important Check Points for good servicing".

PIONEER CORPORATION 4-1, Meguro 1-chome, Meguro-ku, Tokyo 153-8654, Japan
PIONEER ELECTRONICS (USA) INC. P.O. Box 1760, Long Beach, CA 90801-1760, U.S.A.
PIONEER EUROPE NV Haven 1087, Keetberglaan 1, 9120 Melsele, Belgium
PIONEER ELECTRONICS ASIACENTRE PTE. LTD. 253 Alexandra Road, #04-01, Singapore 159936
ⓒ**PIONEER CORPORATION 2009**

T-ZZV MAR. 2009 Printed in Japan

http://www.xiaoyu163.com

http://www.xiaoyu163.com

SAFETY INFORMATION

This service manual is intended for qualified service technicians ; it is not meant for the casual do-it-yourselfer. Qualified technicians have the necessary test equipment and tools, and have been trained to properly and safely repair complex products such as those covered by this manual.
Improperly performed repairs can adversely affect the safety and reliability of the product and may void the warranty. If you are not qualified to perform the repair of this product properly and safely, you should not risk trying to do so and refer the repair to a qualified service technician.

WARNING
This product contains lead in solder and certain electrical parts contain chemicals which are known to the state of California to cause cancer, birth defects or other reproductive harm.

Health & Safety Code Section 25249.6 - Proposition 65

NOTICE
(FOR CANADIAN MODEL ONLY)
Fuse symbols (fast operating fuse) and/or (slow operating fuse) on PCB indicate that replacement parts must be of identical designation.

REMARQUE
(POUR MODÈLE CANADIEN SEULEMENT)
Les symboles de fusible (fusible de type rapide) et/ou (fusible de type lent) sur CCI indiquent que les pièces de remplacement doivent avoir la même désignation.

(FOR USA MODEL ONLY)

1. SAFETY PRECAUTIONS

The following check should be performed for the continued protection of the customer and service technician.

LEAKAGE CURRENT CHECK

Measure leakage current to a known earth ground (water pipe, conduit, etc.) by connecting a leakage current tester such as Simpson Model 229-2 or equivalent between the earth ground and all exposed metal parts of the appliance (input/output terminals, screwheads, metal overlays, control shaft, etc.). Plug the AC line cord of the appliance directly into a 120V AC 60 Hz outlet and turn the AC power switch on. Any current measured must not exceed 0.5 mA.

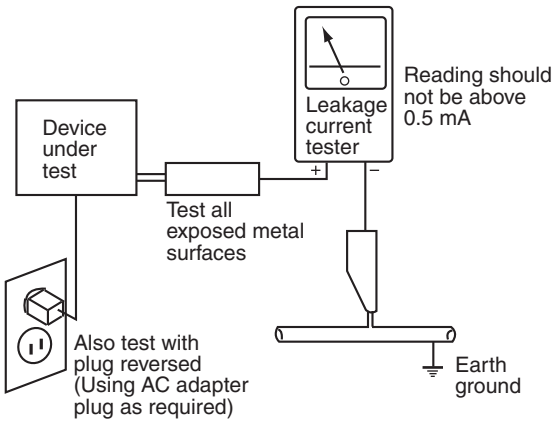

AC Leakage Test

ANY MEASUREMENTS NOT WITHIN THE LIMITS OUTLINED ABOVE ARE INDICATIVE OF A POTENTIAL SHOCK HAZARD AND MUST BE CORRECTED BEFORE RETURNING THE APPLIANCE TO THE CUSTOMER.

2. PRODUCT SAFETY NOTICE

Many electrical and mechanical parts in the appliance have special safety related characteristics. These are often not evident from visual inspection nor the protection afforded by them necessarily can be obtained by using replacement components rated for voltage, wattage, etc. Replacement parts which have these special safety characteristics are identified in this Service Manual.

Electrical components having such features are identified by marking with a ⚠ on the schematics and on the parts list in this Service Manual.
The use of a substitute replacement component which does not have the same safety characteristics as the PIONEER recommended replacement one, shown in the parts list in this Service Manual, may create shock, fire, or other hazards.

Product Safety is continuously under review and new instructions are issued from time to time. For the latest information, always consult the current PIONEER Service Manual. A subscription to, or additional copies of, PIONEER Service Manual may be obtained at a nominal charge from PIONEER.

http://www.xiaoyu163.com

http://www.xiaoyu163.com

[Important Check Points for Good Servicing]

In this manual, procedures that must be performed during repairs are marked with the below symbol.
Please be sure to confirm and follow these procedures.

1. Product safety

Please conform to product regulations (such as safety and radiation regulations), and maintain a safe servicing environment by following the safety instructions described in this manual.

① Use specified parts for repair.

Use genuine parts. Be sure to use important parts for safety.

② Do not perform modifications without proper instructions.

Please follow the specified safety methods when modification(addition/change of parts) is required due to interferences such as radio/TV interference and foreign noise.

③ Make sure the soldering of repaired locations is properly performed.

When you solder while repairing, please be sure that there are no cold solder and other debris.
Soldering should be finished with the proper quantity. (Refer to the example)

④ Make sure the screws are tightly fastened.

Please be sure that all screws are fastened, and that there are no loose screws.

⑤ Make sure each connectors are correctly inserted.

Please be sure that all connectors are inserted, and that there are no imperfect insertion.

⑥ Make sure the wiring cables are set to their original state.

Please replace the wiring and cables to the original state after repairs.
In addition, be sure that there are no pinched wires, etc.

⑦ Make sure screws and soldering scraps do not remain inside the product.

Please check that neither solder debris nor screws remain inside the product.

⑧ There should be no semi-broken wires, scratches, melting, etc. on the coating of the power cord.

Damaged power cords may lead to fire accidents, so please be sure that there are no damages.
If you find a damaged power cord, please exchange it with a suitable one.

⑨ There should be no spark traces or similar marks on the power plug.

When spark traces or similar marks are found on the power supply plug, please check the connection and advise on secure connections and suitable usage. Please exchange the power cord if necessary.

⑩ Safe environment should be secured during servicing.

When you perform repairs, please pay attention to static electricity, furniture, household articles, etc. in order to prevent injuries.
Please pay attention to your surroundings and repair safely.

2. Adjustments

To keep the original performance of the products, optimum adjustments and confirmation of characteristics within specification.
Adjustments should be performed in accordance with the procedures/instructions described in this manual.

3. Lubricants, Glues, and Replacement parts

Use grease and adhesives that are equal to the specified substance.
Make sure the proper amount is applied.

4. Cleaning

For parts that require cleaning, such as optical pickups, tape deck heads, lenses and mirrors used in projection monitors, proper cleaning should be performed to restore their performances.

5. Shipping mode and Shipping screws

To protect products from damages or failures during transit, the shipping mode should be set or the shipping screws should be installed before shipment. Please be sure to follow this method especially if it is specified in this manual.

http://www.xiaoyu163.com

http://www.xiaoyu163.com

CONTENTS

SAFETY INFORMATION 2
1. SERVICE PRECAUTIONS 6
1.1 NOTES ON SOLDERING 6
1.2 NOTES ON REPLACING PARTS 6
1.3 CAUTION 6
2. SPECIFICATIONS 7
2.1 SPECIFICATIONS 7
2.2 PANEL FACILITIES 8
3. BASIC ITEMS FOR SERVICE 13
3.1 CHECK POINT AFTER SERVICING 13
3.2 PCB LOCATIONS 14
3.3 JIGS LIST 15
4. BLOCK DIAGRAM 16
4.1 OVERALL WIRING DIAGRAM 16
4.2 BLOCK DIAGRAM FOR DIGITAL AUDIO BLOCK 18
4.3 BLOCK DIAGRAM FOR ANALOG AUDIO BLOCK 20
4.4 BLOCK DIAGRAM FOR DIGITAL VIDEO BLOCK 21
4.5 BLOCK DIAGRAM FOR ANALOG VIDEO BLOCK 22
4.6 BLOCK DIAGRAM FOR U-COM BLOCK 24
4.7 BLOCK DIAGRAM FOR POWER BLOCK 26
5. DIAGNOSIS 28
5.1 DIAGNOSIS FLOWCHART 28
5.2 CIRCUIT DESCRIPTION 43
6. SERVICE MODE 47
6.1 TEST MODE 47
7. DISASSEMBLY 49
8. EACH SETTING AND ADJUSTMENT 55
8.1 HOW TO UPDATE FIRMWARE 55
9. EXPLODED VIEWS AND PARTS LIST 58
9.1 PACKING SECTION 58
9.2 EXTERIOR SECTION 60
9.3 REAR SECTION 62
9.4 FRONT SECTION 64
10. SCHEMATIC DIAGRAM 66
10.1 AUDIO ASSY 66
10.2 V6 COMPOSITE ASSY 68
10.3 COMPONENT ASSY (1/2) 70
10.4 COMPONENT ASSY (2/2) 72
10.5 DIGITAL MAIN ASSY (1/11) GUIDE PAGE 74
10.6 DIGITAL MAIN ASSY (2/11) 80
10.7 DIGITAL MAIN ASSY (3/11) 82
10.8 DIGITAL MAIN ASSY (4/11) 84
10.9 DIGITAL MAIN ASSY (5/11) 86
10.10 DIGITAL MAIN ASSY (6/11) 88
10.11 DIGITAL MAIN ASSY (7/11) 90
10.12 DIGITAL MAIN ASSY (8/11) 92
10.13 DIGITAL MAIN ASSY (9/11) 94
10.14 DIGITAL MAIN ASSY (10/11) 96
10.15 DIGITAL MAIN ASSY (11/11) 98
10.16 POWER PACK ASSY (1/2) 100
10.17 POWER PACK (2/2), IR/SR, BRIDGE 1 AND BRIDGE 2 ASSYS 102
10.18 BIND 1, BIND 2, BIND 3, BIND 4 AND BIND 5 ASSYS 104
10.19 V6 FRONT INPUT, V6 JOG, V6 POWER SW AND V6 H.P ASSYS 106
10.20 V6 DISPLAY ASSY 108
10.21 REGULATOR, V6 PRIMARY AND V6 TRANS 1 ASSYS 110
10.22 TRANS 2 AND TRANS 3 ASSYS 112
11. PCB CONNECTION DIAGRAM 114
11.1 AUDIO ASSY 114
11.2 V6 COMPOSITE AND COMPONENT ASSYS 118
11.3 DIGITAL MAIN ASSY 122
11.4 POWER PACK ASSY 126
11.5 IR/SR, BRIDGE 1 AND BRIDGE 2 ASSYS 130
11.6 BIND 1, BIND 2, BIND 3, BIND 4 AND BIND 5 ASSYS 132
11.7 V6 FRONT INPUT, V6 JOG, V6 POWER SW AND V6 H.P ASSYS 134
11.8 V6 DISPLAY ASSY 138

http://www.xiaoyu163.com

http://www.xiaoyu163.com

11.9 REGULATOR, V6 PRIMARY, V6 TRANS 1, TRANS 2 AND TRANS 3 ASSYS 142
12. PCB PARTS LIST 146

QQ 376315150 892498299
TEL 13942296513
www. xiaoyu163. com

http://www.xiaoyu163.com

http://www.xiaoyu163.com

1. SERVICE PRECAUTIONS

1.1 NOTES ON SOLDERING

- For environmental protection, lead-free solder is used on the printed circuit boards mounted in this unit.
  Be sure to use lead-free solder and a soldering iron that can meet specifications for use with lead-free solders for repairs accompanied by reworking of soldering.

- Compared with conventional eutectic solders, lead-free solders have higher melting points, by approximately 40 °C.
  Therefore, for lead-free soldering, the tip temperature of a soldering iron must be set to around 373 °C in general, although the temperature depends on the heat capacity of the PC board on which reworking is required and the weight of the tip of the soldering iron.

Do NOT use a soldering iron whose tip temperature cannot be controlled.

Compared with eutectic solders, lead-free solders have higher bond strengths but slower wetting times and higher melting temperatures (hard to melt/easy to harden).

The following lead-free solders are available as service parts:
- Parts numbers of lead-free solder:
  GYP1006 1.0 in dia.
  GYP1007 0.6 in dia.
  GYP1008 0.3 in dia.

1.2 NOTES ON REPLACING PARTS

The part listed below is difficult to replace as a discrete component part.
When the part listed in the table is defective, replace whole Assy.

ASSY NAME	PCB ASSY Part No.	Parts that is Diffcult to Replace			
		Ref No.	FUNCTION	Part No.	Remarks
DIGITAL MAIN ASSY	1019AH : AWX9427 919AH : AWX9426	IC800	EMMA2RL2	UPD61283F1-407LU2A	BGA
		IC1501	HDMI Receiver	SII9233ACTU	IC with heat-pad

1.3 CAUTION

- **Discharging**
  Please refer to page 49, “Preparations Before Perfoming Diagnosis of the POWER PACK Assy”.

- **Ground Points**
  Please refer to page 50, “Ground Points”.

http://www.xiaoyu163.com

http://www.xiaoyu163.com

2. SPECIFICATIONS

2.1 SPECIFICATIONS

Amplifier section

Continuous average power output of 90 watts* per channel, min., at 8 ohms, from 20 Hz to 20 000 Hz with no more than 0.2 % total harmonic distortion.**

Front (stereo) . . . . . .90 W + 90 W
Power output (1 kHz, 6 Ω, 0.05 %, 1 ch driven)
. . . . . 120 W per channel
Guaranteed speaker impedance
. . . . . 16 Ω to 8 Ω,
less than 8 Ω to 6 Ω (setting required)

** Measured pursuant to the Federal Trade Commission's Trade Regulation rule on Power Output Claims for Amplifiers*
*** Measured by Audio Spectrum Analyzer*

Audio Section

Input (Sensitivity/Impedance)
LINE . . . . . 284 mV/47 kΩ
Output (Level/Impedance)
REC . . . . . 284 mV/2.2 kΩ
Signal-to-Noise Ratio
(IHF, short circuited, A network)
LINE . . . . . 100 dB
Signal-to-Noise Ratio [EIA, at 1 W (1 kHz)]
LINE . . . . . 81 dB

Tuner Section

Frequency Range (FM) . . . . . 87.5 MHz to 108 MHz
Antenna Input (FM) . . . . . 75 Ω unbalanced
Frequency Range (AM) . . . . . 530 kHz to 1700 kHz
Antenna (AM) . . . . . .Loop antenna (balanced)

Video Section

Signal level
Composite . . . . . 1 Vp-p (75 Ω)
Component Video . . . . . .Y: 1.0 Vp-p (75 Ω),
PB, PR: 0.7 Vp-p (75 Ω)
Corresponding maximum resolution
Component Video 1080p (1125p)
(Video convert off)

Digital In/Out Section

HDMI terminal . . . . . 19-pin (Not DVI)
HDMI output type . . . . . .5 V, 100 mA
USB terminal. . . . . USB2.0 Full Speed (Type A)
iPod terminal . . . . . USB, and Video (Composite)
SIRIUS antenna cable . . . . . 8-pin mini DIN cable

Integrated control section

Control (SR) terminal . . . . . Ø 3.5 Mini-jack (MONO)
Control (IR) terminal . . . . . Ø 3.5 Mini-jack (MONO)
IR signal. . . . . .High Active (High Level: 2.0 V)

Miscellaneous

Power requirements. . . . . AC 120 V, 60 Hz
Power consumption . . . . . 350 W
In standby . . . . . 0.5 W (KURO LINK OFF)
0.8 W (KURO LINK ON)
Dimensions
. . . . . .420 mm (W) x 158 mm (H) x 349 mm (D)
(16 9/16 in. (W) x 6 1/4 in. (H) x 13 3/4 in. (D))
Weight (without package) . . . . . .8.7 kg (19 lb 3 oz)

Furnished Parts Number

MCACC Setup microphone (APM7008) 1
Remote control unit (AXD7551(*VSX-1019AH*))/
Remote control unit (AXD7552(*VSX-919AH*)) 1
AA/IEC R6 dry cell batteries 2
iPod cable (ADE7129) 1
AM loop antenna 1
FM wire antenna 1
Operating instructions

Note

- Specifications and the design are subject to possible modifications without notice,due to improvements.

Manufactured under license from Dolby Laboratories. Dolby, Pro Logic, Surround EX and the double-D symbol are trademarks of Dolby Laboratories.

Manufactured under license under U.S. Patent #'s: 5,451,942; 5,956,674; 5,974,380; 5,978,762; 6,226,616; 6,487,535; 7,212,872; 7,333,929; 7,392,195; 7,272,567 & other U.S. and worldwide patents issued & pending. DTS is a registered trademark and the DTS logos, Symbol, DTS-HD and DTS-HD Master Audio are trademarks of DTS, Inc. © 1996-2008 DTS, Inc. All Rights Reserved.

Windows Media and the Windows logo are trademarks or registered trademarks of Microsoft Corporation in the United States and/or other countries.

iPod is a trademark of Apple Inc., registered in the U.S. and other countries. iPhone is a trademark of Apple Inc.

SIRIUS, XM and all related marks and logos are trademarks of Sirius XM Radio Inc. and its subsidiaries. All rights reserved. Service not available in Alaska and Hawaii.

"Neural Surround", "Neural Audio", "Neural" and "NRL" are trademarks and logos owned by Neural Audio Corporation, THX is a trademark of THX Ltd., which may be registered in some jurisdictions. All rights reserved.

http://www.xiaoyu163.com

http://www.xiaoyu163.com

2.2 PANEL FACILITIES

[1] Front panel

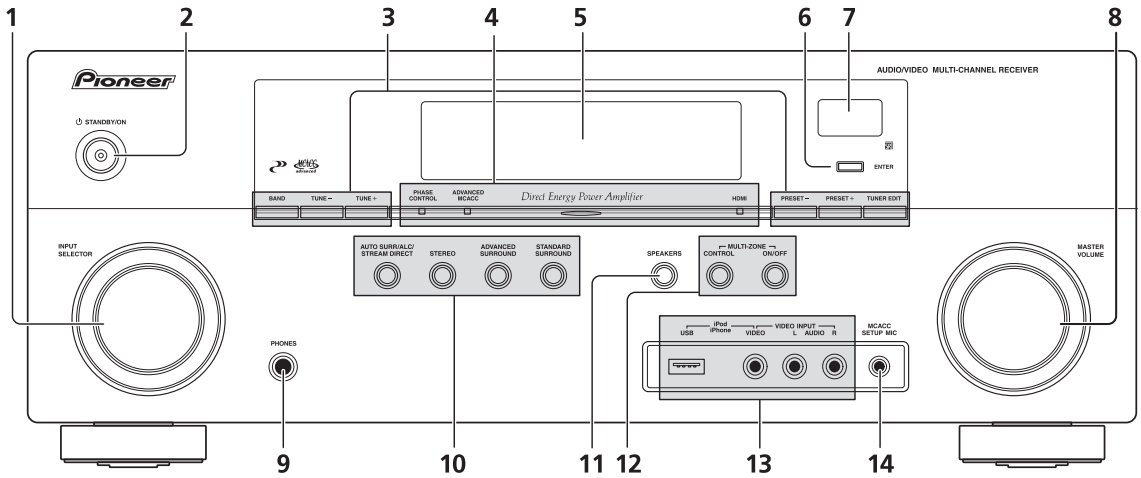

1 INPUT SELECTOR dial
Use to select an input function.

2 ⏻ STANDBY/ON
Switches the receiver between on and standby. Power indicator lights when the receiver is on. When the **KURO LINK** function is set to **ON**, the power indicator lights dimly when the power is in standby.

3 Tuner controls
BAND – Switches between AM and FM radio bands.
TUNE +/– – Use to find radio frequencies.
PRESET +/– – Use to find preset stations.
TUNER EDIT – Use with **TUNE +/–**, **PRESET +/–** and **ENTER** to memorize and name stations for recall.

4 PHASE CONTROL indicator – Lights to indicate Phase Control is selected.
ADVANCED MCACC indicator – Lights when **EQ** is set to **ON** in the **AUDIO PARAMETER** menu.
HDMI indicator – Blinks when connecting an HDMI-equipped component; lights when the component is connected.

5 Character display

6 ENTER

7 Remote sensor
Receives the signals from the remote control.

8 MASTER VOLUME dial

9 PHONES jack
Use to connect headphones. When the headphones are connected, there is no sound output from the speakers.

10 Listening mode buttons
AUTO SURR/ALC/STREAM DIRECT – Switches between Auto Surround, Auto level control mode and Stream Direct mode.
STEREO – Switches between stereo playback, and Front Stage Surround Advance modes.
ADVANCED SURROUND – Use to switch between the various surround modes.
STANDARD SURROUND – Press for Standard decoding and to switch between the various DD Pro Logic IIx and Neo:6 options.

11 SPEAKERS
Use to change the speaker system.

12 MULTI-ZONE controls
If you've made MULTI-ZONE connections use these controls to control the sub zone from the main zone.

13 iPod/iPhone/USB, VIDEO INPUT terminals
Use to connect your Apple iPod as an audio and video source, or connect a USB device for audio and photo playback.

14 MCACC SETUP MIC jack
Use to connect the supplied microphone.

www.xiaoyu163.com

http://www.xiaoyu163.com

http://www.xiaoyu163.com

[2] Display

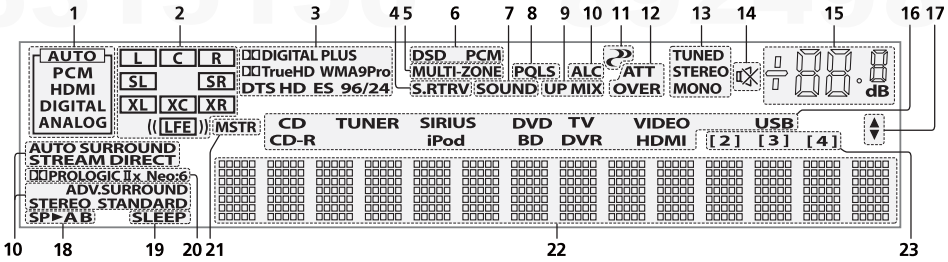

1 SIGNAL indicators
Light to indicate the currently selected input signal.
AUTO lights when the receiver is set to select the input signal automatically.

2 Program format indicators
Light to indicate the channels being input when PCM signals are being input. They do not indicate the audio signals being output from the receiver.
L/R – Left front/Right front channel
C – Center channel
SL/SR – Left surround/Right surround channel
LFE – Low frequency effects channel (the **(( ))** indicators light when an LFE signal is being input)
XL/XR – Two channels other than the ones above
XC – Either one channel other than the ones above, the mono surround channel or matrix encode flag

3 Digital format indicators
Light when a signal encoded in the corresponding format is detected.

4 S.RTRV
Lights when the Sound Retriever function is active.

5 MULTI-ZONE
Lights when the MULTI-ZONE feature is active.

6 DSD PCM – Light during DSD (Direct Stream Digital) to PCM conversion with SACDs.
PCM – Lights during playback of PCM signals.

7 SOUND
Lights when any of the Midnight, Loudness or tone controls feature is selected.
Lights when Dialog Enhancement is switched on.

8 PQLS
Lights when the PQLS feature is active.

9 UP MIX
Lights when the UP Mix is switched on.

10 Listening mode indicators
AUTO SURROUND – Lights when the Auto Surround feature is switched on.
ALC – Lights when the ALC (Auto level control) mode is selected.
STREAM DIRECT – Lights when Direct/ Pure Direct is selected.
ADV.SURROUND – Lights when one of the Advanced Surround modes has been selected.
STEREO – Lights when stereo listening is switched on.
STANDARD – Lights when one of the Standard Surround modes is switched on.

11 (PHASE CONTROL)
Lights when the Phase Control is switched on.

12 Analog signal indicators
Light to indicate reducing the level of an analog signal.

13 Tuner indicators
TUNED – Lights when a broadcast is being received.
STEREO – Lights when a stereo FM broadcast is being received in auto stereo mode.
MONO – Lights when the mono mode is set using **MPX**.

14
Lights when the sound is muted.

15 Master volume level
Shows the overall volume level.
"---" indicates the minimum level, and "**+12dB**" indicates the maximum level.

16 Input function indicators
Light to indicate the input function you have selected.

17 Scroll indicators
Light when there are more selectable items when making the various settings.

18 Matrix decoding format indicators
PRO LOGIC IIx – This lights to indicate Pro Logic II / Pro Logic IIx decoding.
Neo:6 – When one of the Neo:6 modes of the receiver is on, this lights to indicate Neo:6 processing.

19 Speaker indicators
Lights to indicate the current speaker system, **A** and/or **B**.

20 SLEEP
Lights when the receiver is in sleep mode.

21 MSTR
Lights during playback of DTS-HD Master Audio signal.

22 Character display
Displays various system information.

23 Remote control mode indicator
Lights to indicate the receiver's remote control mode setting. (Not displayed when set to **1**.)

http://www.xiaoyu163.com

http://www.xiaoyu163.com

[3] Rear panel

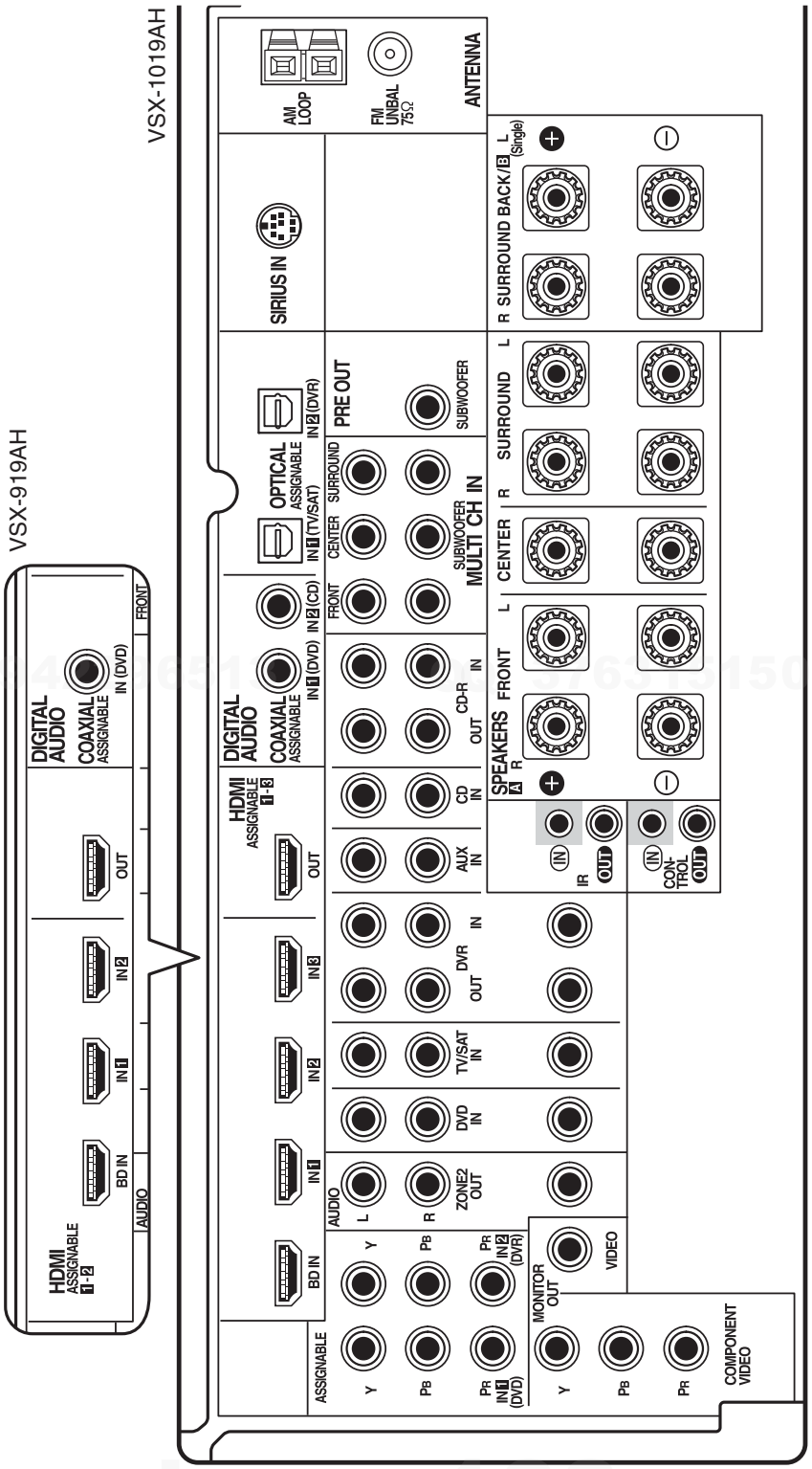

http://www.xiaoyu163.com

http://www.xiaoyu163.com

[4] Remote control

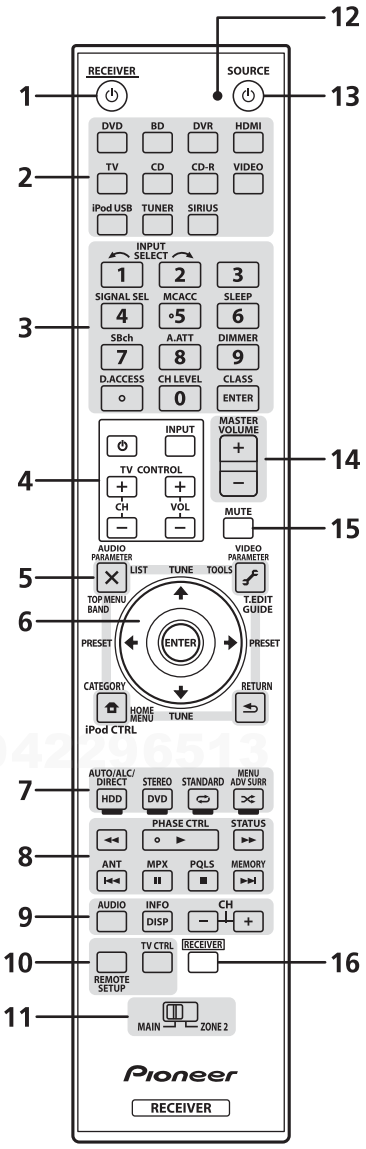

The remote has been conveniently color-coded according to component control using the following system:

- **White** – Receiver control, TV Control
- **Blue** – Other controls

1 ⏻ RECEIVER
This switches between standby and on for this receiver.

2 Input function buttons
Press to select control of other components.

3 Number buttons and other receiver/ component controls
Use the number buttons to directly select a radio frequency or the tracks on a CD, DVD, etc.

ENTER can be used to enter commands for TV or DTV.
Press **RECEIVER** first to access:

INPUT SELECT – Use to select the input function.
SIGNAL SEL – Use to select an input signal.
MCACC – Press to switch between MCACC presets.
SLEEP – Use to put the receiver in sleep mode and select the amount of time before sleep.
SBch – Use to select the surround back/virtual surround back channel mode.
A.ATT – Attenuates (lowers) the level of an analog input signal to prevent distortion.
DIMMER – Dims or brightens the display.
CH LEVEL – Press repeatedly to select a channel, then use ⬅/➡ to adjust the level.

Press **TUNER** first to access:

D.ACCESS – After pressing, you can access a radio station directly using the number buttons.
CLASS – Switches between the seven banks (classes) of radio station presets.

4 TV CONTROL buttons
These buttons are dedicated to control the TV assigned to **TV** operation selector switch. Thus if you only have one TV to hook up to this system assign it to the **TV** operation selector switch.

⏻ Use to turn on/off the power of the TV.
INPUT – Use to select the TV input signal.
CH +/– – Use to select channels.
VOL +/– – Use to adjust the volume on your TV.

5 Tuner/component control buttons/HOME MENU
These button controls can be accessed after you have selected the corresponding input function button (**DVD**, **DVR**, **TV**, etc.).
Press **RECEIVER** first to access:

AUDIO PARAMETER – Use to access the Audio options.
VIDEO PARAMETER – Use to access the Video options.
HOME MENU – Use to access the Home Menu.
RETURN – Press to confirm and exit the current menu screen (also use to return to the previous menu with DVDs or to select closed captioning with DTV).

6 ⬆/⬇/⬅/➡ (TUNE/PRESET) /ENTER
Use the arrow buttons when setting up your surround sound system and the Audio or Video options. Also used to control DVD menus/options and for deck 1 of a double cassette deck player. Use **TUNE** ⬆/⬇ to find radio frequencies and use **PRESET** ⬅/➡ to find preset stations.

http://www.xiaoyu163.com

http://www.xiaoyu163.com

7 Receiver controls

Press **RECEIVER** first to access:

AUTO/ALC/DIRECT – Switches between Auto Surround, Auto level control mode and Stream Direct mode.

STEREO – Switches between stereo playback, and Front Stage Surround Advance modes.

STANDARD – Press for Standard decoding and to switch between the various DD Pro Logic IIx and Neo:6 options.

ADV SURR – Use to switch between the various surround modes.

8 Component control buttons

The main buttons (▶ , ■ , etc.) are used to control a component after you have selected it using the input function buttons.

The controls above these buttons can be accessed after you have selected the corresponding input function button (for example **DVD**, **DVR** or **TV**). These buttons also function as described below.

Press **TV** first to access:

ANT – Use to select the VHF/UHF antennas or Cable TV.

Press **TUNER** first to access:

MPX – Switches between stereo and mono reception of FM broadcasts. If the signal is weak, then switching to mono will improve the sound quality.

Press **RECEIVER** first to access:

PHASE CTRL – Press to switch on/off Phase Control.

STATUS – Press to check selected receiver settings and Audio input signal format.

9 AUDIO – Changes the audio or channel on DVD discs.

DISPLAY – Switches between named station presets and radio frequencies.

CH +/– – Use to select channels for DVD/DVR units.

10 REMOTE SETUP – Use to input the preset code when making remote control settings and to set the remote control mode.

TV CTRL – Use this button to set preset code of your TV's manufacturer when controlling TV.

11 MULTI-ZONE operation selector switch

Switch to perform operations in the main zone and sub zone.

12 Remote control LED

Lights when a command is sent from the remote control.

13 ⏻ SOURCE

Press to turn on/off other components connected to the receiver.

14 MASTER VOLUME +/–

Use to set the listening volume.

15 MUTE

Mutes the sound or restores the sound if it has been muted (adjusting the volume also restores the sound).

16 RECEIVER

Switches the remote to control the receiver (used to select the white commands above the number buttons (**A.ATT**, etc.)). Also use this button to set up surround sound.

www.xiaoyu163.com

http://www.xiaoyu163.com

http://www.xiaoyu163.com

3. BASIC ITEMS FOR SERVICE

3.1 CHECK POINT AFTER SERVICING

Items to be checked after servicing

To keep the product quality after servicing, confirm recommended check points shown below.

No.	Procedures	Check points
1	Confirm whether the customer complain has been solved. If the customer complain occurs with the particular source, such as Dolby Digital, DTS, AAC, DVD-A and HDMI, input it for the operation check.	The customer complain must not be reappeared. Video, Audio and operations must be normal.
2	Check the analog audio playback. (Make the analog connections with a DVD player.)	Each channel audio and operations must be normal.
3	Check the digital audio playback. (Make the digital connections with a DVD player.)	Each channel audio and operations must be normal.
4	Check surround playback. (Select Surround mode and check the multichannel operations via the DSP circuit.)	Each channel audio and operations must be normal.
5	Check the video outputs. (Connect with a DVD player.)	Video and operations must be normal.
6	Check the tuner (AM and FM) operations.	Audio and operations must be normal.
7	Check the sound from headphone output.	Sound must be normal, without noise.
8	Check the appearance of the product.	No scratches or dirt on its appearance after receiving it for service.

See the table below for the items to be checked regarding video and audio.

Item to be checked regarding video	Item to be checked regarding audio
Block noise	Distortion
Horizontal noise	Noise
Flicker	Volume too low
Disturbed image (video jumpiness)	Volume too high
Too dark	Volume fluctuating
Too bright	Sound interrupted
Mottled color	

Cleaning

Before shipping out the product, be sure to clean the following positions by using the prescribed cleaning tools.

Position to be cleaned	Name	Part No.	Remarks
Fans	Cleaning paper	GED-008	Refer to “9.2 EXTERIOR SECTION”.

www.xiaoyu163.com

http://www.xiaoyu163.com

http://www.xiaoyu163.com

3.2 PCB LOCATIONS

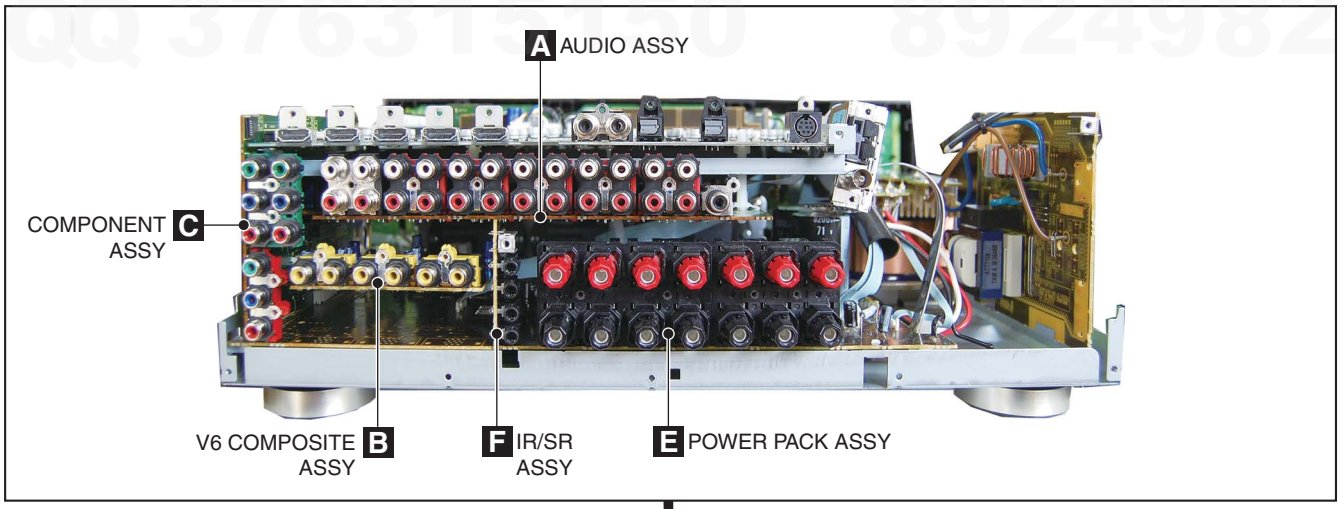

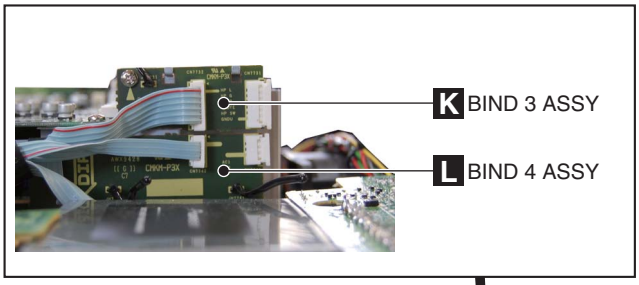

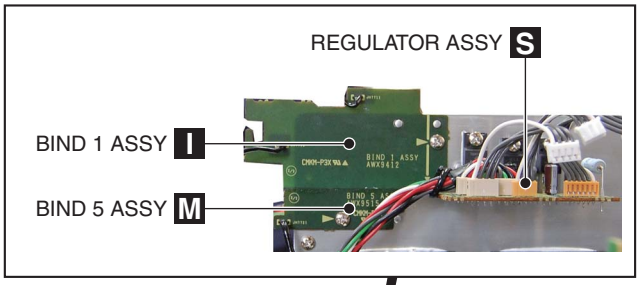

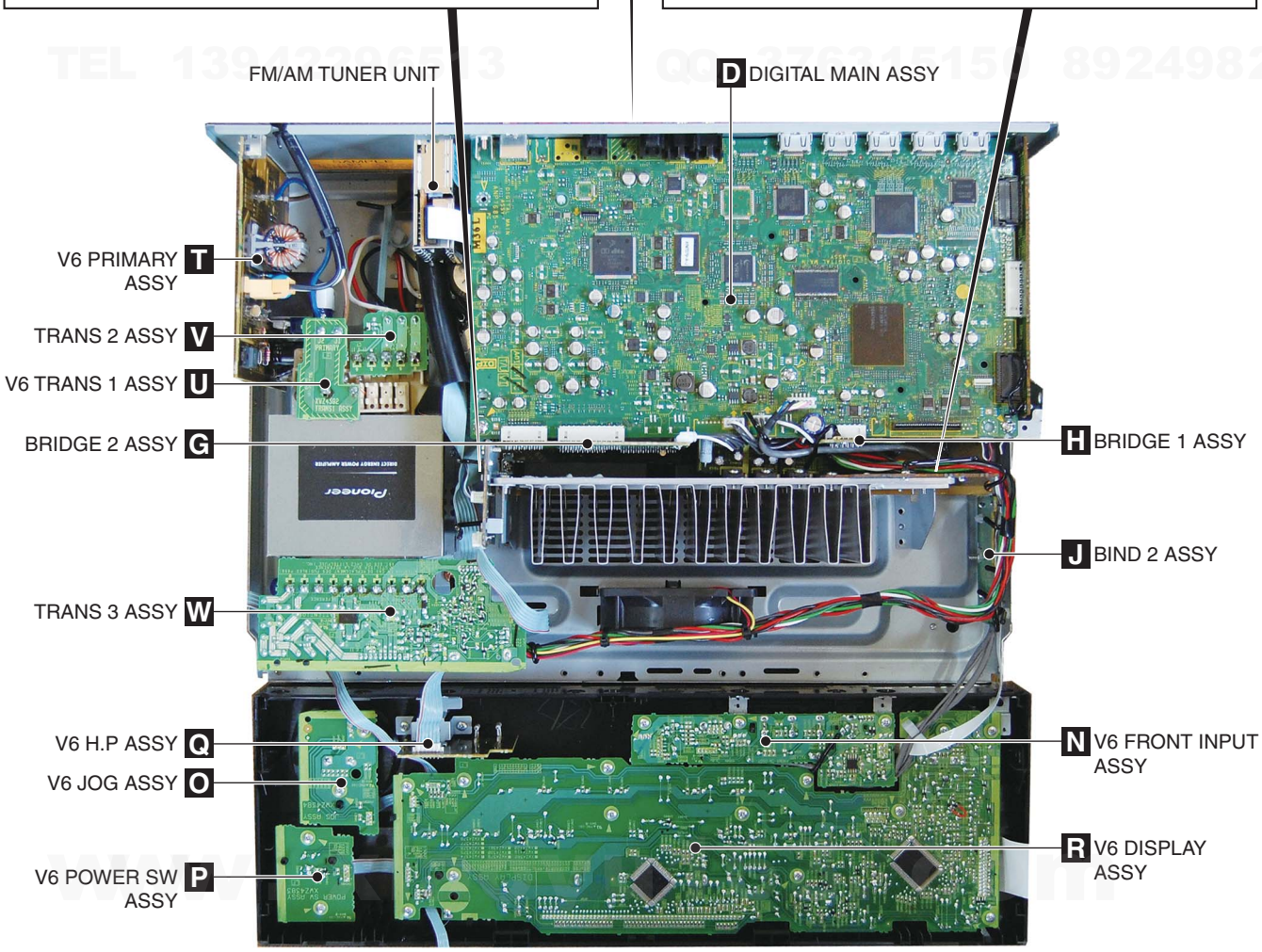

http://www.xiaoyu163.com

http://www.xiaoyu163.com

NOTES: ● *Parts marked by "NSP" are generally unavailable because they are not in our Master Spare Parts List.*
● *The ⚠ mark found on some component parts indicates the importance of the safety factor of the part. Therefore, when replacing, be sure to use parts of identical designation.*

LIST OF ASSEMBLIES

Mark	Symbol and Description	VSX-1019AH-K /UXJCA	VSX-919AH-K /CUXJCA
NSP	1..AMP ASSY	AWK8073	AWK8073
	2..POWER PACK ASSY	AWX9337	AWX9337
	2..IR/SR ASSY	AWX9342	AWX9342
	2..TRANS 2 ASSY	AWX9343	AWX9343
	2..TRANS 3 ASSY	AWX9344	AWX9344
	2..BRIDGE 1 ASSY	AWX9348	AWX9348
	2..BRIDGE 2 ASSY	AWX9349	AWX9349
	2..BIND 2 ASSY	AWX9413	AWX9413
NSP	1..COMPONENT_BIND ASSY	AWK8077	AWK8077
	2..COMPONENT ASSY	AWX9350	AWX9350
	2..BIND 1 ASSY	AWX9412	AWX9412
	2..BIND 5 ASSY	AWX9515	AWX9515
NSP	1..AUDIO ASSY	AWK8079	AWK8079
	2..REGULATOR ASSY	AWX9341	AWX9341
	2..AUDIO ASSY	AWX9352	AWX9352
	2..BIND 3 ASSY	AWX9424	AWX9424
	2..BIND 4 ASSY	AWX9428	AWX9428
	1..DIGITAL MAIN ASSY	AWX9427	AWX9426
NSP	1..COMPLEX ASSY	XWK3375	XWK3376
	2..V6 DISPLAY ASSY	XWZ4374	XWZ4375
	2..V6 POWER SW ASSY	XWZ4383	XWZ4383
	2..V6 JOG ASSY	XWZ4384	XWZ4384
	2..V6 FRONT INPUT ASSY	XWZ4385	XWZ4385
	2..V6 COMPOSITE ASSY	XWZ4386	XWZ4393
	2..V6 PRIMARY ASSY	XWZ4387	XWZ4387
	2..V6 H.P ASSY	XWZ4391	XWZ4391
	2..V6 TRANS 1 ASSY	XWZ4392	XWZ4392
	1..FM/AM TUNER UNIT	AXX7250	AXX7250

3.3 JIGS LIST

[1] Jigs list

Name	Jig No.	Remarks
19P board to board extension jig cable	GGD1577	Diagnosis

http://www.xiaoyu163.com

http://www.xiaoyu163.com

4. BLOCK DIAGRAM

4.1 OVERALL WIRING DIAGRAM

CAUTION - FOR CONTINUED PROTECTION AGAINST RISK OF FIRE, REPLACE WITH SAME TYPE AND RATINGS OF FUSE.

*4

MODEL		FU1
VSX-1019AH- VSX-919AH-	/UXJCA /CUXJCA	REK1154- (10A/125V)

MODEL		*1 MAIN TRANS	*2 AC CORD
VSX-1019AH- VSX-919AH-	/UXJCA /CUXJCA	XTS3117-	ADG7024-

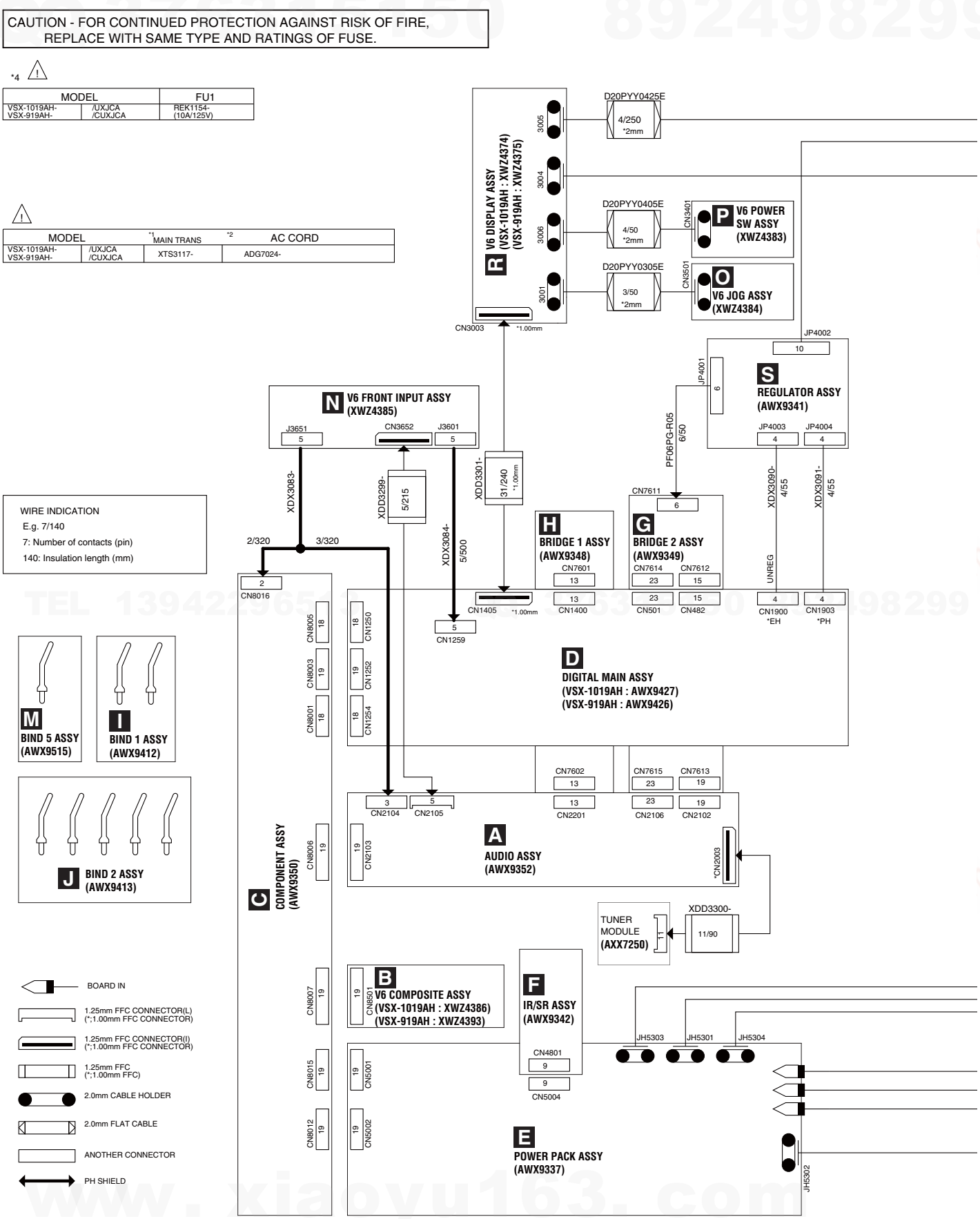

http://www.xiaoyu163.com

http://www.xiaoyu163.com

- When ordering service parts, be sure to refer to "EXPLODED VIEWS and PARTS LIST" or "PCB PARTS LIST".
- The ⚠ mark found on some component parts indicates the importance of the safety factor of the part. Therefore, when replacing, be sure to use parts of identical designation.
- : The power supply is shown with the marked box.

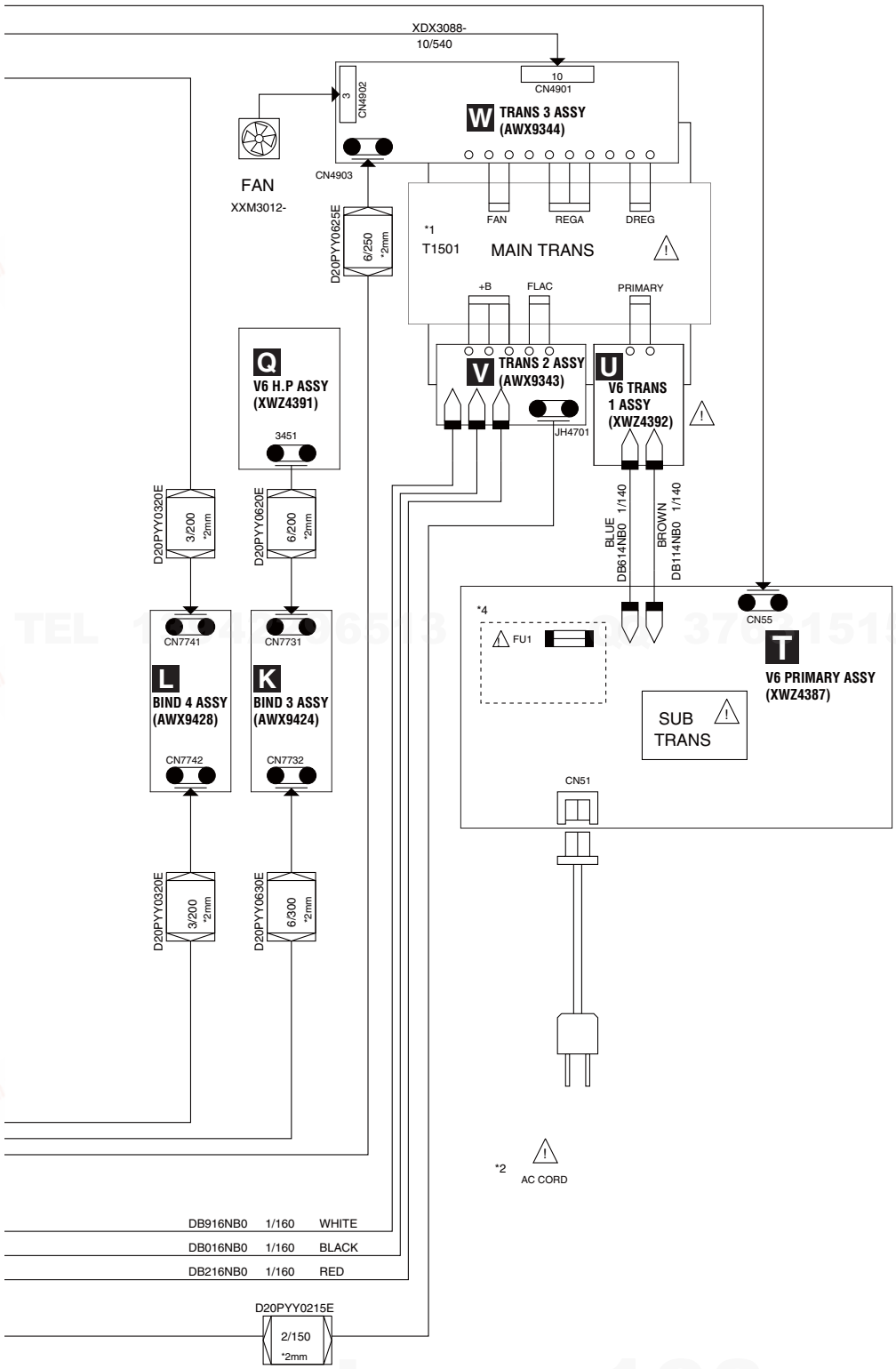

http://www.xiaoyu163.com

http://www.xiaoyu163.com

4.2 BLOCK DIAGRAM FOR DIGITAL AUDIO BLOCK

Block Diagram (Digital Audio part)

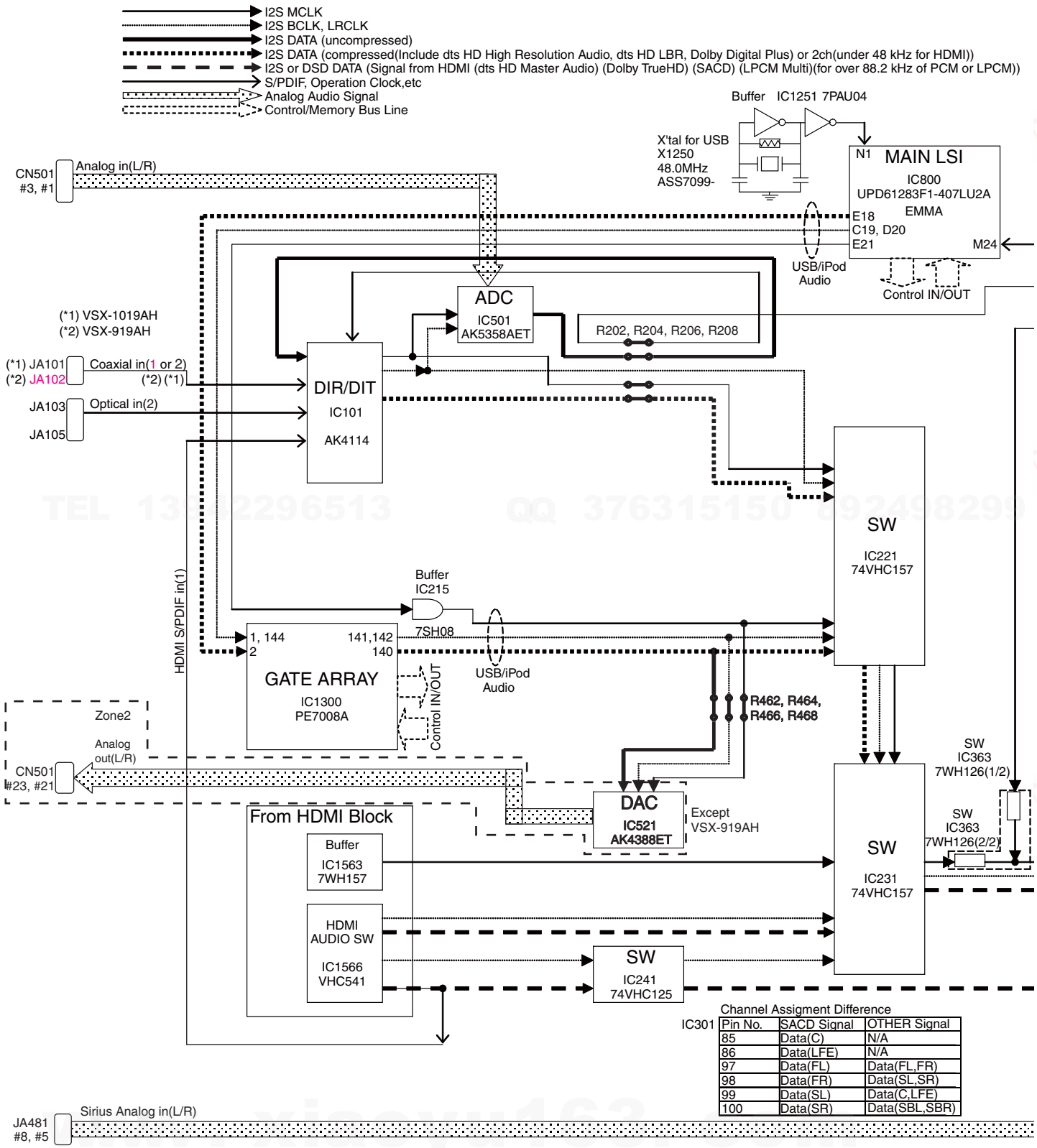

Channel Assigment Difference

IC301

Pin No.	SACD Signal	OTHER Signal
85	Data(C)	N/A
86	Data(LFE)	N/A
97	Data(FL)	Data(FL,FR)
98	Data(FR)	Data(SL,SR)
99	Data(SL)	Data(C,LFE)
100	Data(SR)	Data(SBL,SBR)

http://www.xiaoyu163.com

http://www.xiaoyu163.com

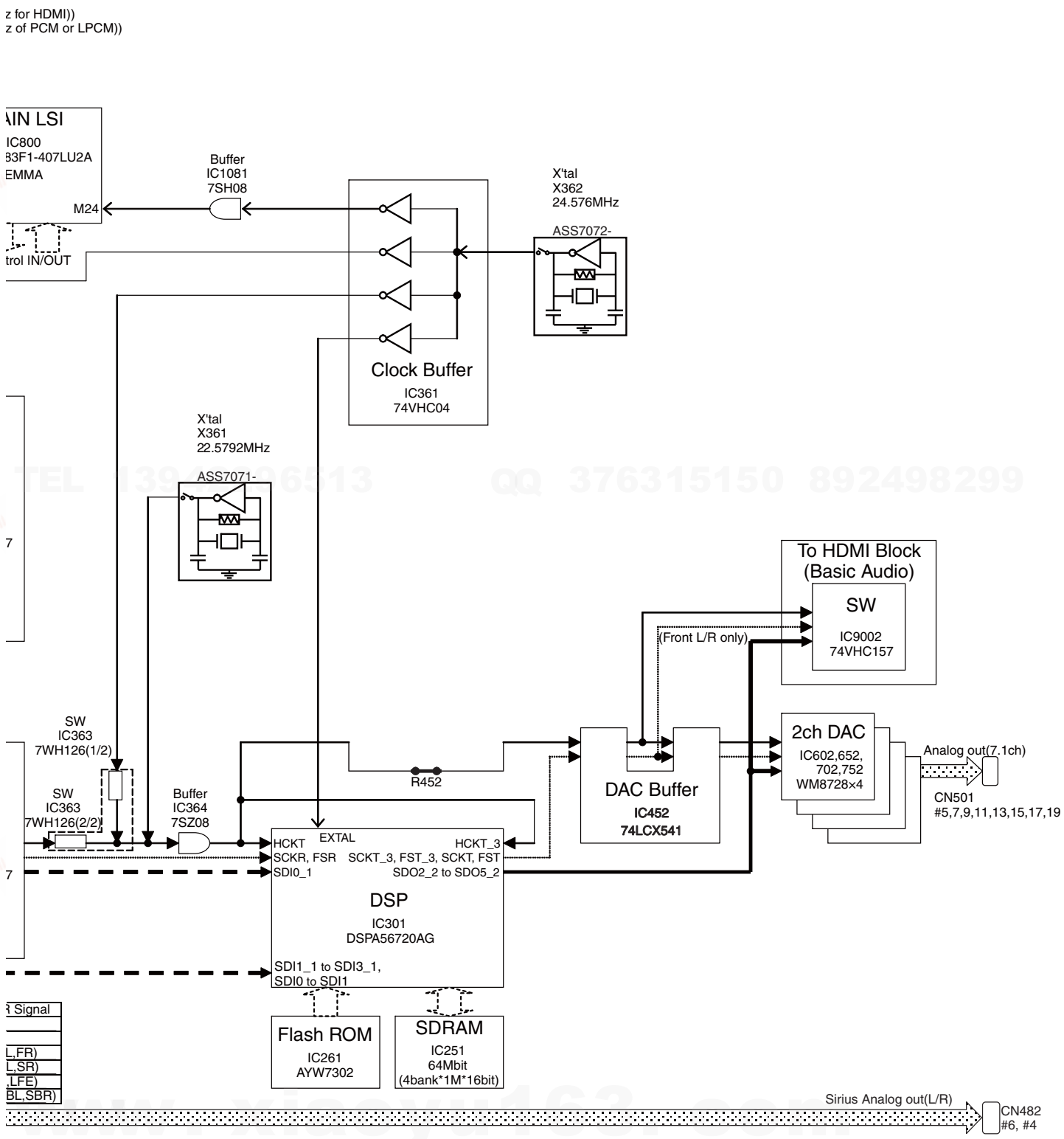

http://www.xiaoyu163.com

http://www.xiaoyu163.com

4.3 BLOCK DIAGRAM FOR ANALOG AUDIO BLOCK

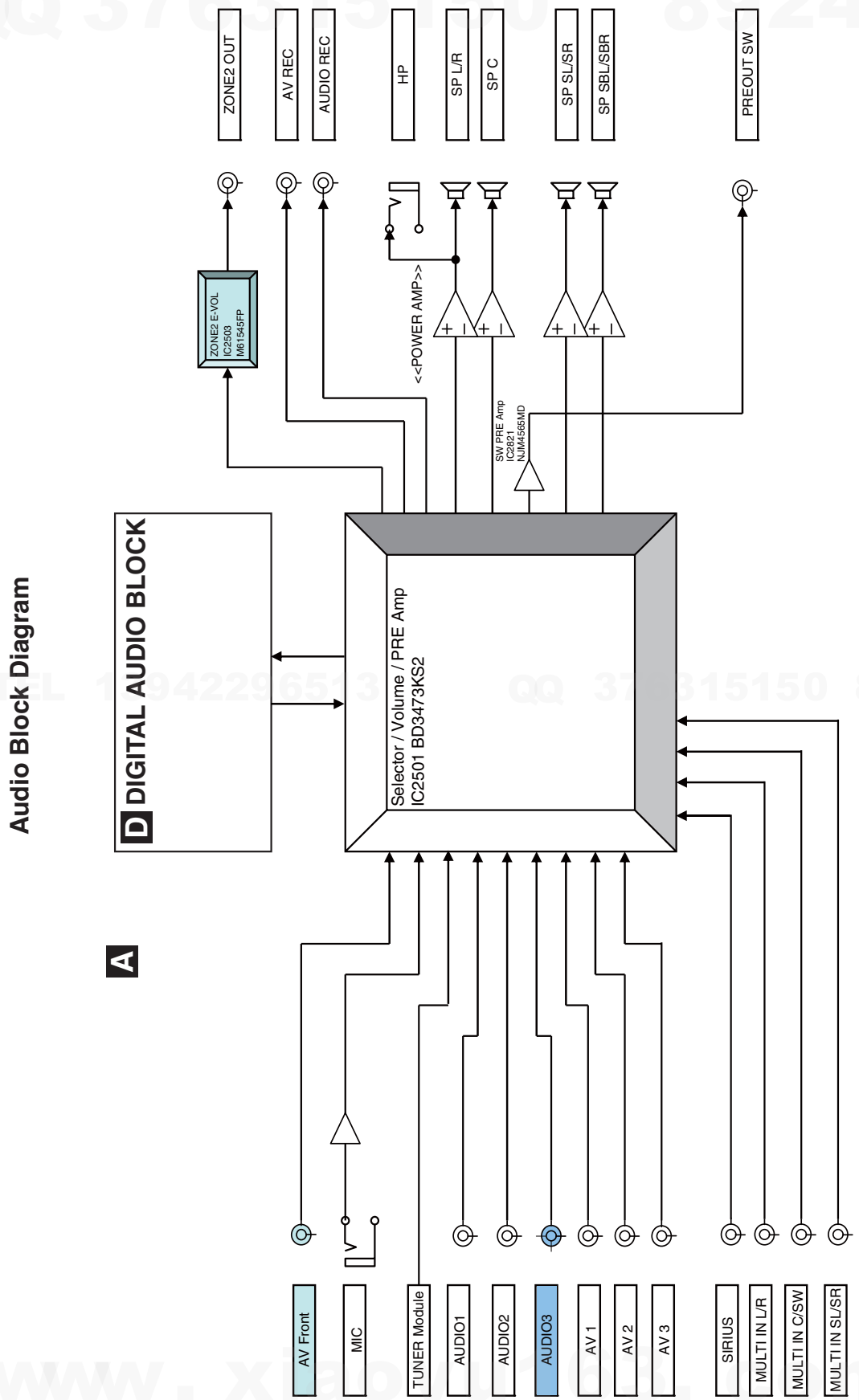

http://www.xiaoyu163.com

http://www.xiaoyu163.com

4.4 BLOCK DIAGRAM FOR DIGITAL VIDEO BLOCK

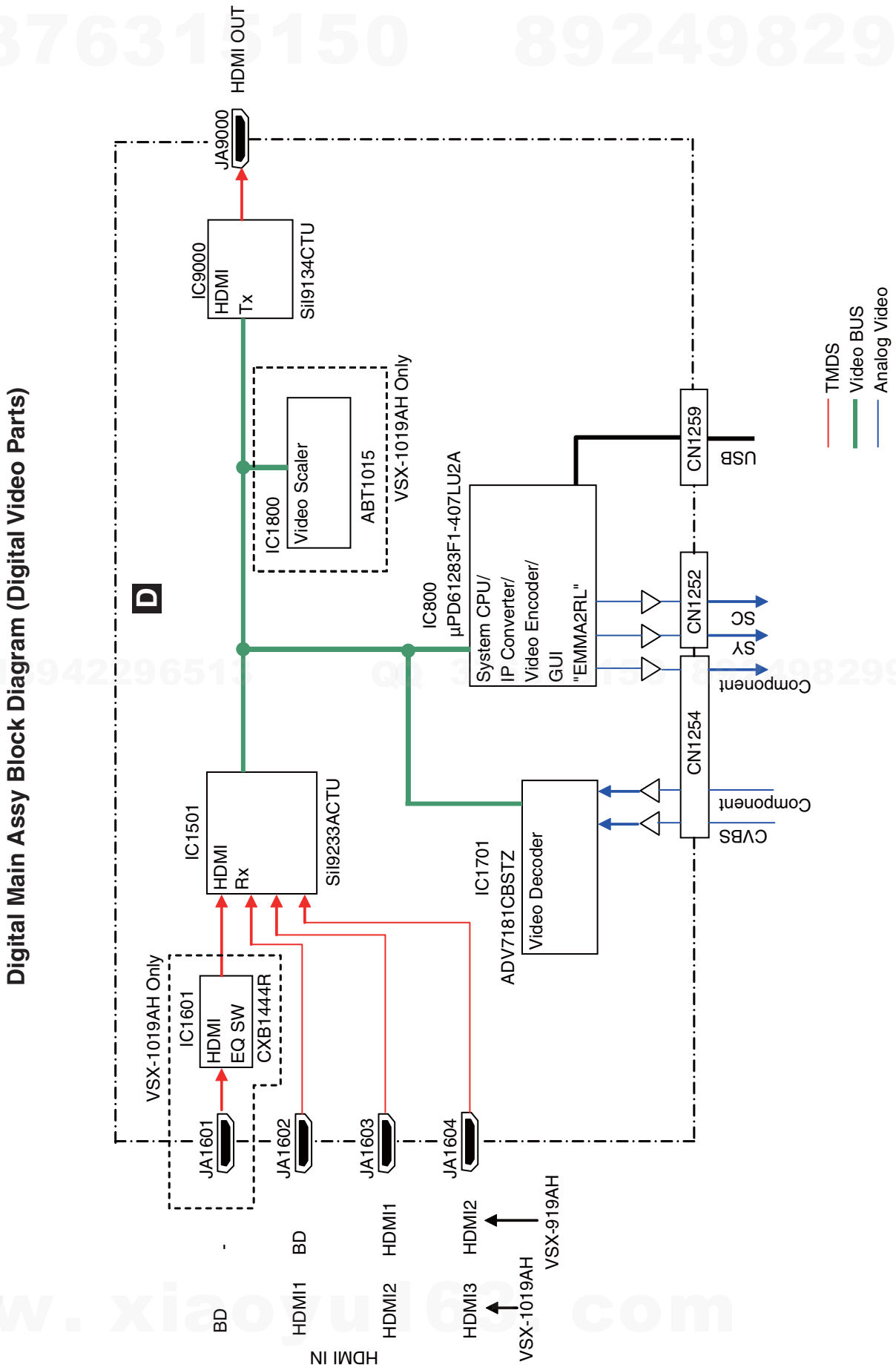

http://www.xiaoyu163.com

http://www.xiaoyu163.com

4.5 BLOCK DIAGRAM FOR ANALOG VIDEO BLOCK

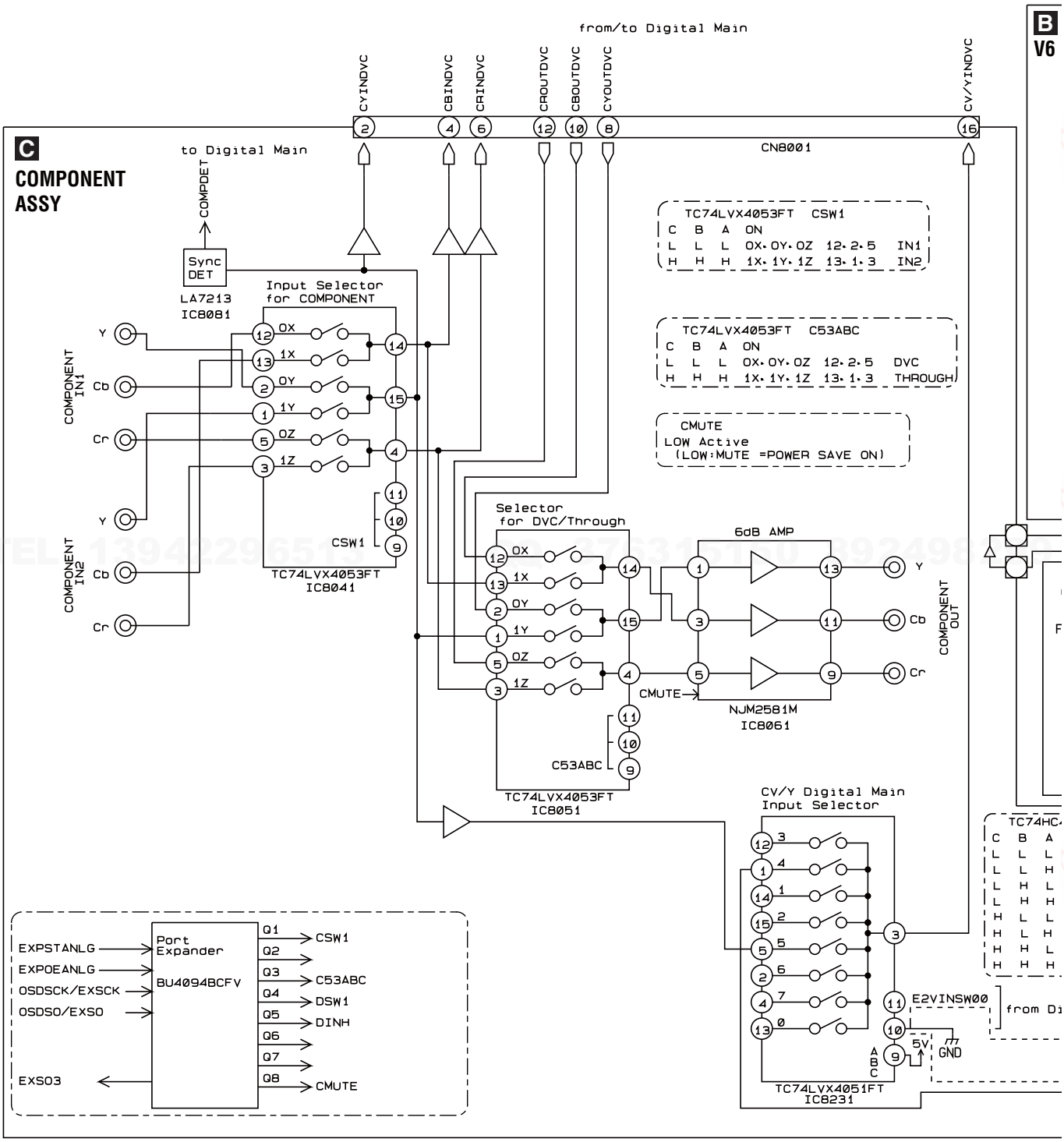

http://www.xiaoyu163.com

http://www.xiaoyu163.com

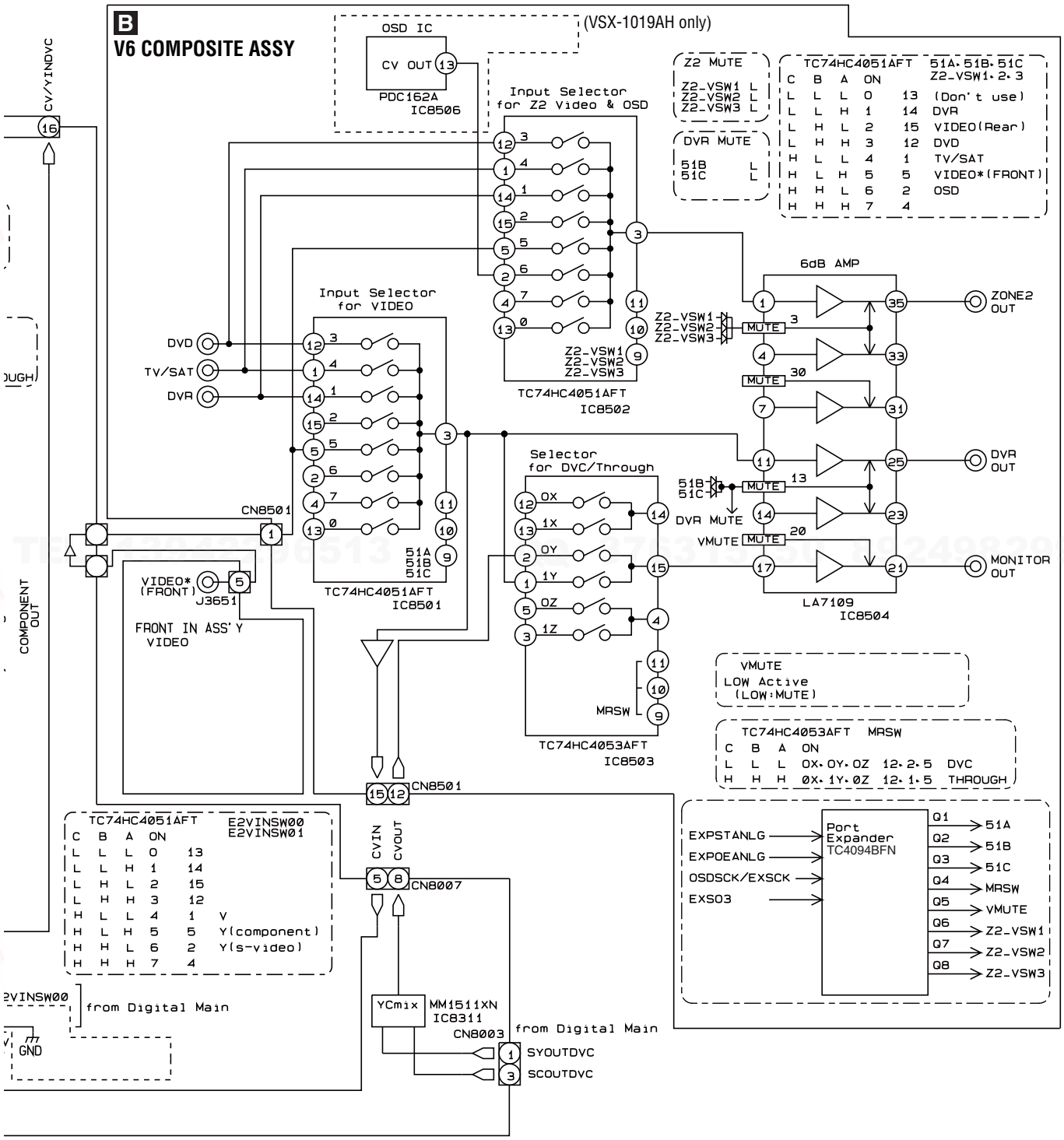

QQ 376315150 892498299
www.xiaoyu163.com

http://www.xiaoyu163.com

http://www.xiaoyu163.com

4.6 BLOCK DIAGRAM FOR U-COM BLOCK

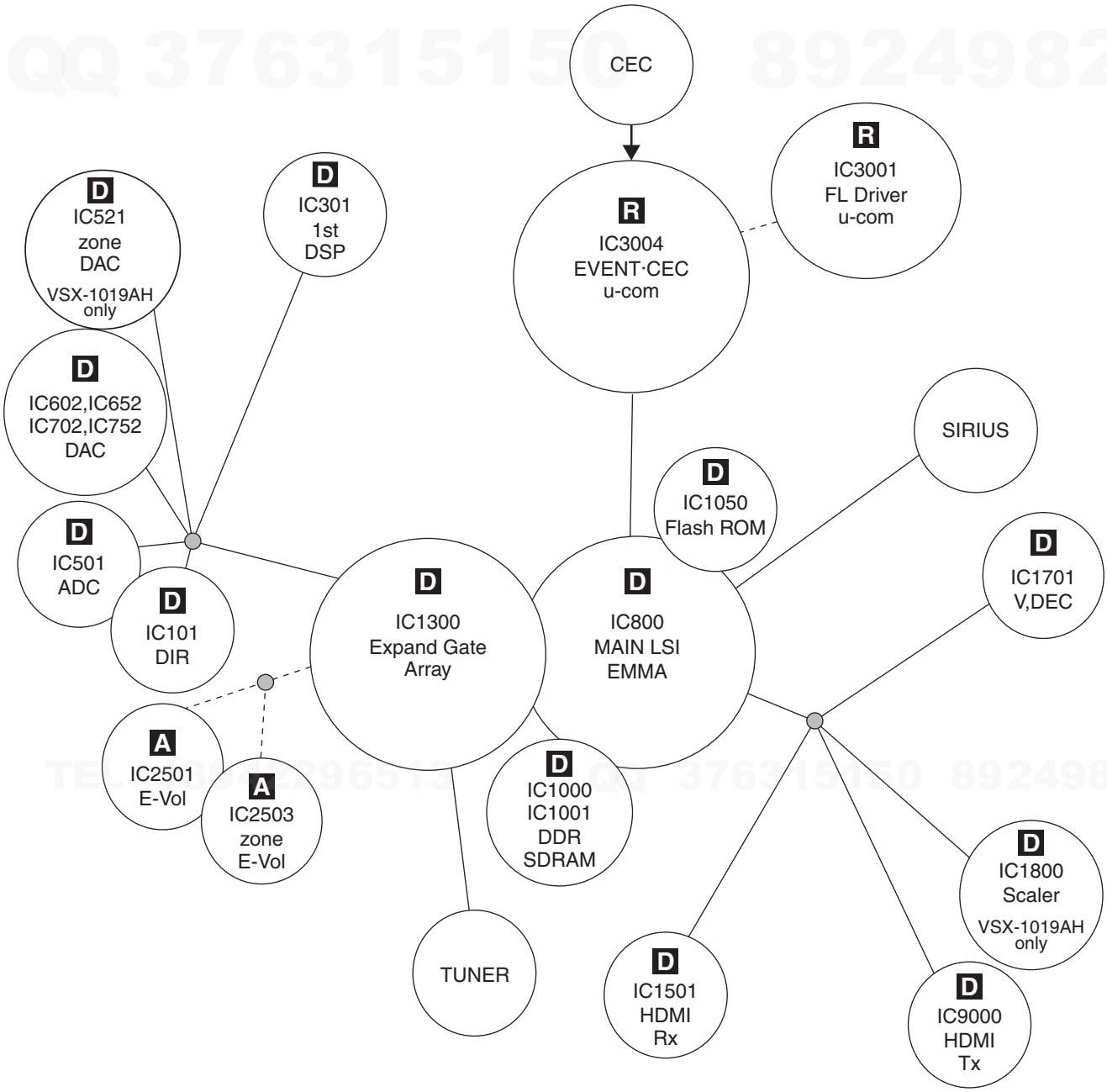

Hard Serial

Soft Serial

Control Port Common

The User Memory data is stored in IC1050(AYW7287) of EMMA Flash ROM and IC3004(PDC188A8) of Event ucom. The setting of the protection history and zone is stored in EVENT ucom and other setting data of user data is stored in EMMA Flash ROM.

www.xiaoyu163.com

http://www.xiaoyu163.com

http://www.xiaoyu163.com

QQ 376315150 892498299

TEL 13942296513 QQ 376315150 892498299

www. xiaoyu163. com

http://www.xiaoyu163.com

http://www.xiaoyu163.com

4.7 BLOCK DIAGRAM FOR POWER BLOCK

Power Supply Diagram

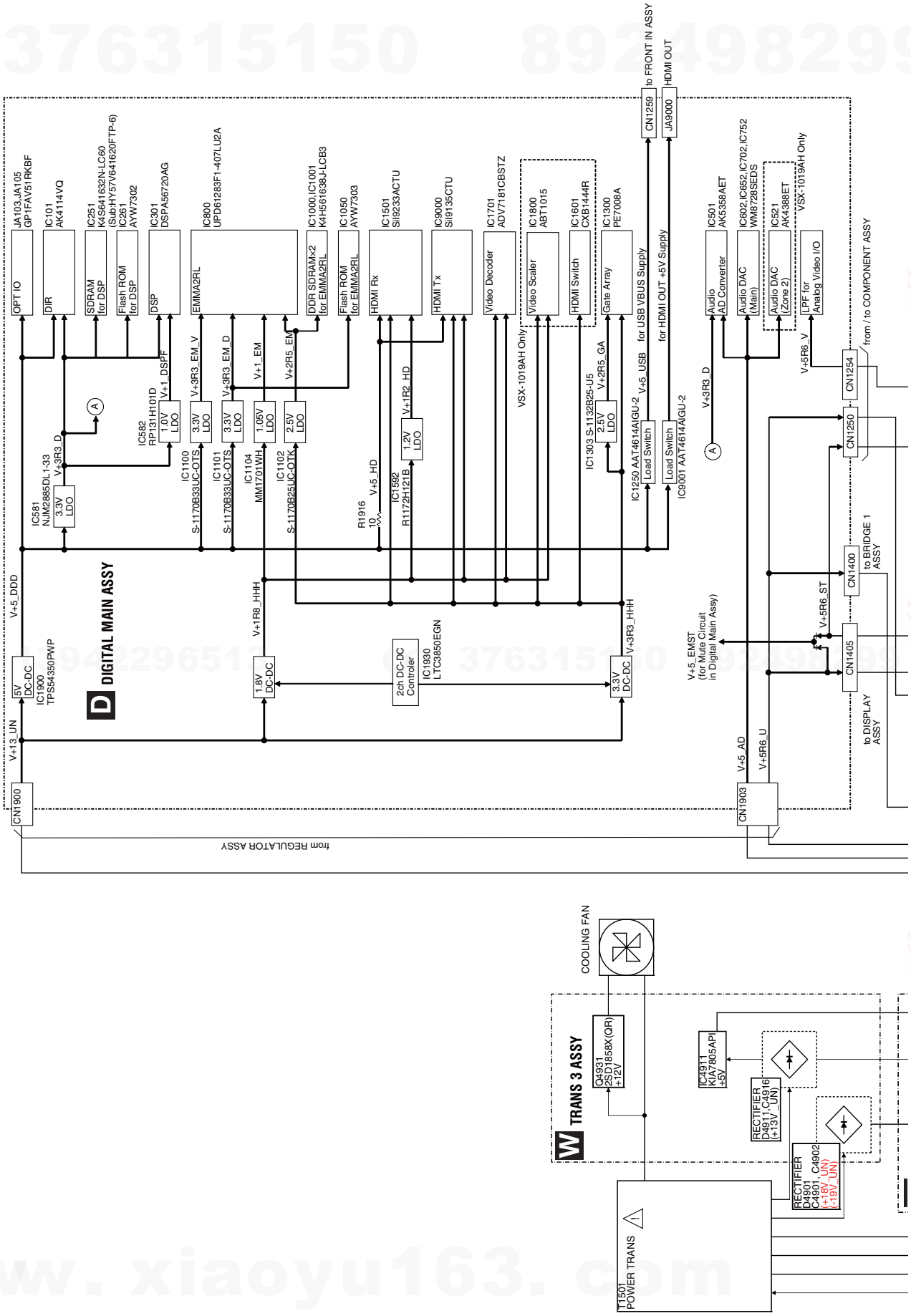

http://www.xiaoyu163.com

http://www.xiaoyu163.com

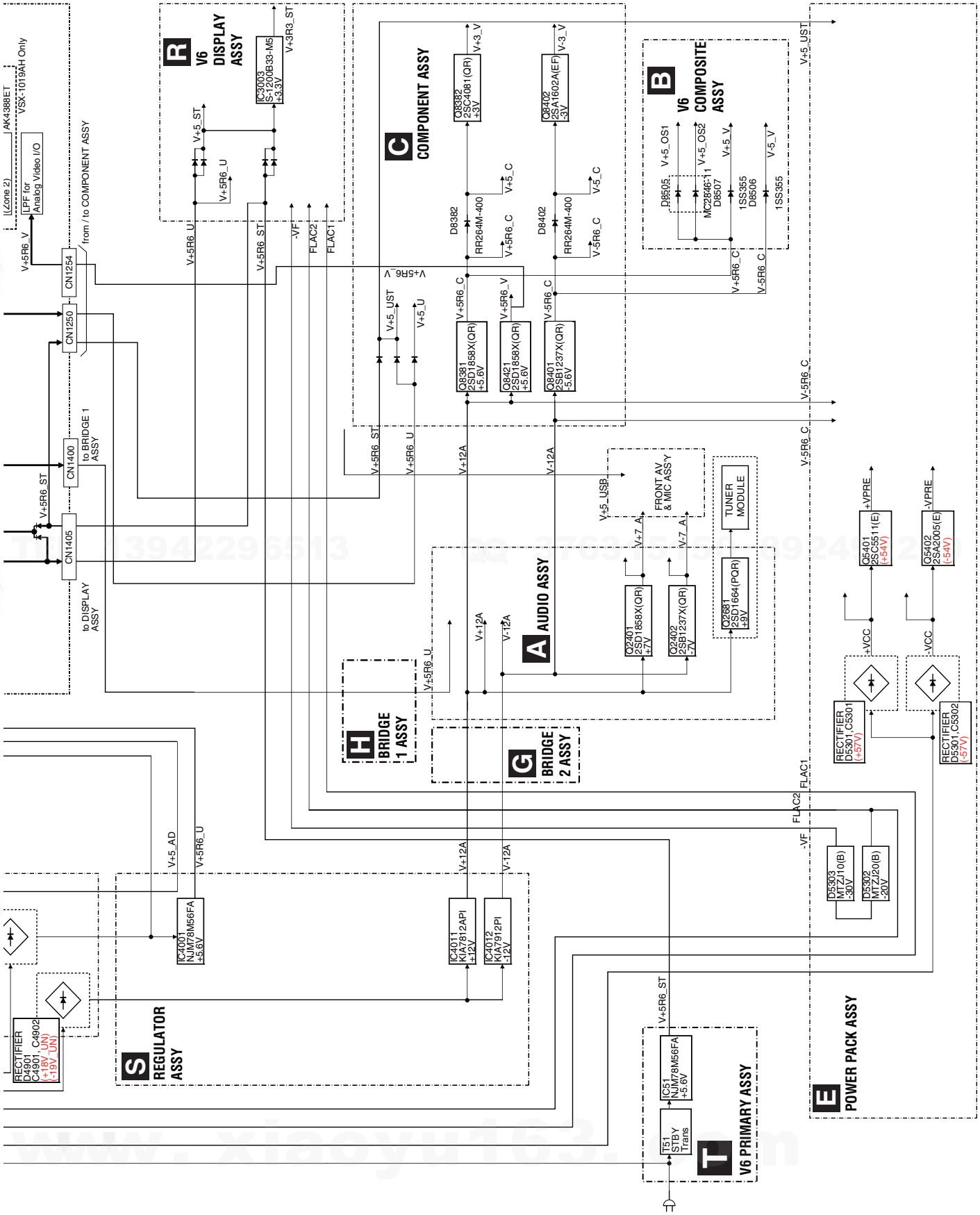

http://www.xiaoyu163.com

http://www.xiaoyu163.com

5. DIAGNOSIS

5.1 DIAGNOSIS FLOWCHART

■ Simplified diagnosis

Errors in the Audio Block of the DIGITAL MAIN Assy (those simply and roughly predictable by machine operation only)

- Sound abnormality in Delay
  If sound abnormality does not occur in the Delay OFF state but occurs in the Delay ON state, it is most likely that a failure has occurred in SDRAM (IC251) or LATCH (IC281, IC291) in the DSP Block.
- No sound at analog signal input
  If sound abnormality does not occur with digital signal input (COAX, OPT, etc.) but occurs only with analog signal input, it is most likely that a failure has occurred in the AD converter (IC501).
- No sound with the PQLS ON (normal sound with the PQLS OFF)
  If no sound is output during CD playback with the PQLS ON, it is most likely that a failure has occurred in the crystal oscillator (X361). (Diagnosis point A)

■ DSP Troubleshooting

<If no sound is output in Multi-Channel-Signal Playback or Surround mode with the COAX, OPT, USB, and HDMI inputs>

- Assume that the LCRs are neither in poor connection nor damaged.
- Assume that diagnosis is performed from Side A.
- This shows failure analysis for the DSP Block of the DIGITAL MAIN Assy.
- The parts marked like 1 in the following chart are located in "Check Points of the DIGITAL MAIN Assy."

Step 0: Preliminary confirmation

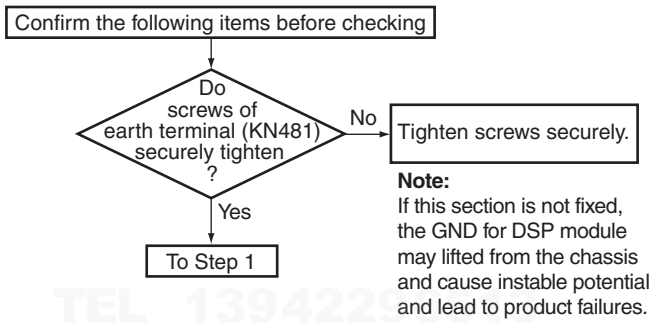

Step 1: MUTE pin

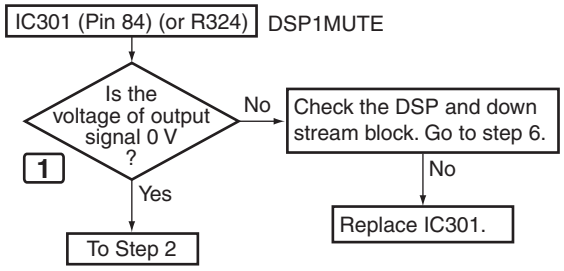

Step 2: Power supply

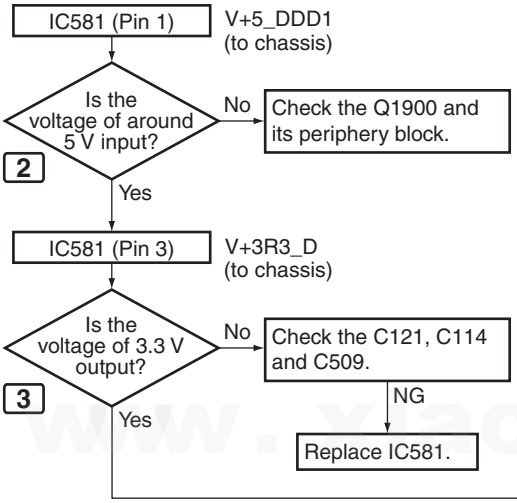

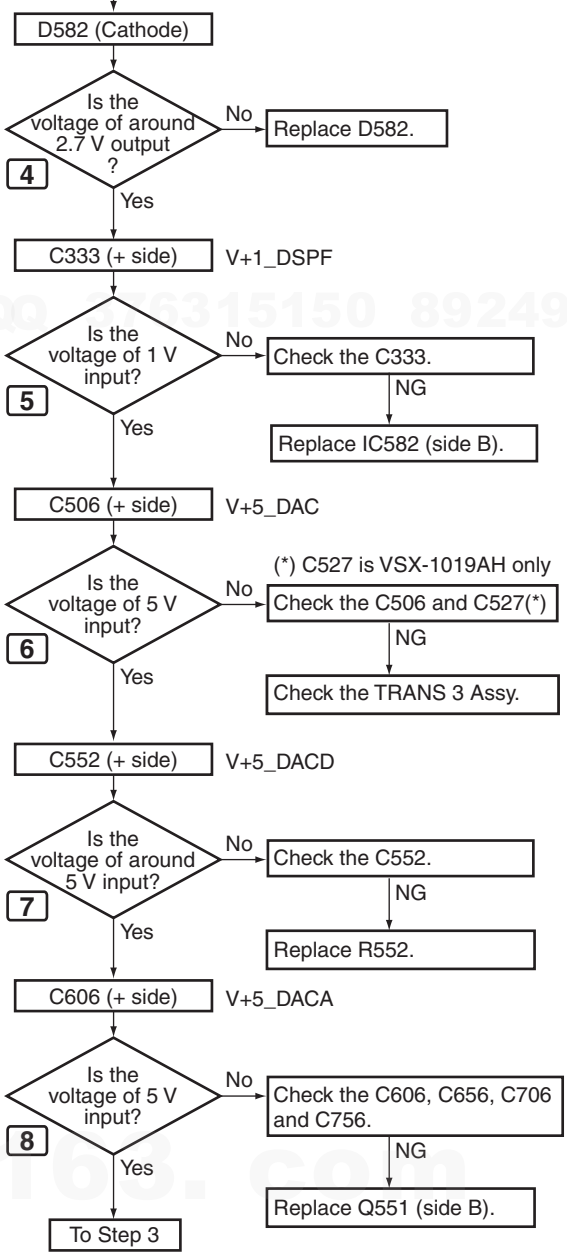

http://www.xiaoyu163.com

http://www.xiaoyu163.com

Step 3: X'tal

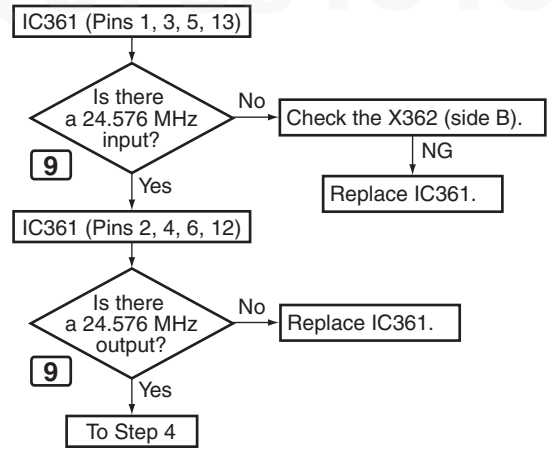

- When the COAX or OPT is input, go to Step 4.
- When the HDMI (SPDIF path) is input, go to Step 4-1.
  Used Source:
  [dts HD High Resolution Audio], [dts HD LBR],
  [Dolby Digital Plus], [2ch of 48kHz sampling rate or less],
  [Other compression stream]
- When the HDMI (SACD) is input, go to Step 5-1.
  Used Source: [SACD]
- When the HDMI (I2S path) is input, go to Step 5-2.
  Used Source:
  [dts HD Master Audio], [Dolby True HD],
  [PCM or LPCM of 88.2kHz sampling rate or more],
  [LPCM Multi ch]
- When the USB is input, go to Step 5-3.

Step 4: DIR

Check that the S/PDIF signal is output.
Check that changes by pulling out and inserting the digital input lines.

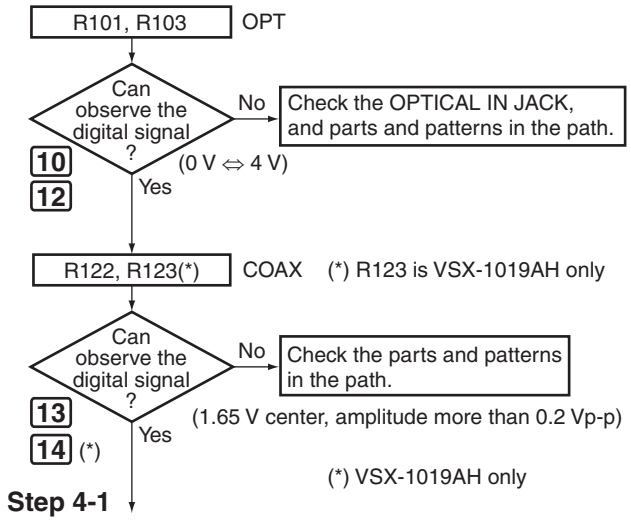

Step 4-1

Check that it changes in the Playback and Pause modes of the HDMI.

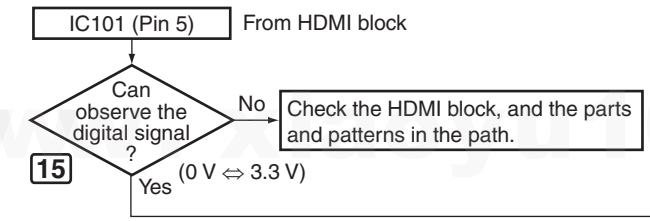

Check that the data and clock signals are output.

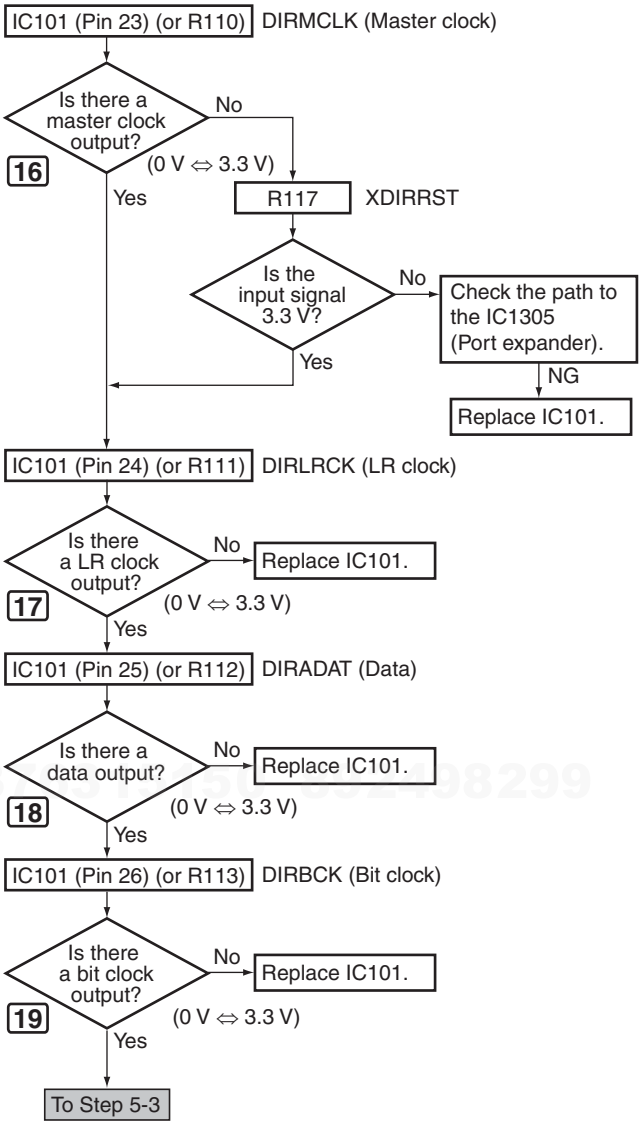

http://www.xiaoyu163.com

http://www.xiaoyu163.com

Step 5: DSP input (digital)

Digital input of each CH when inputting the digital signal with audio.

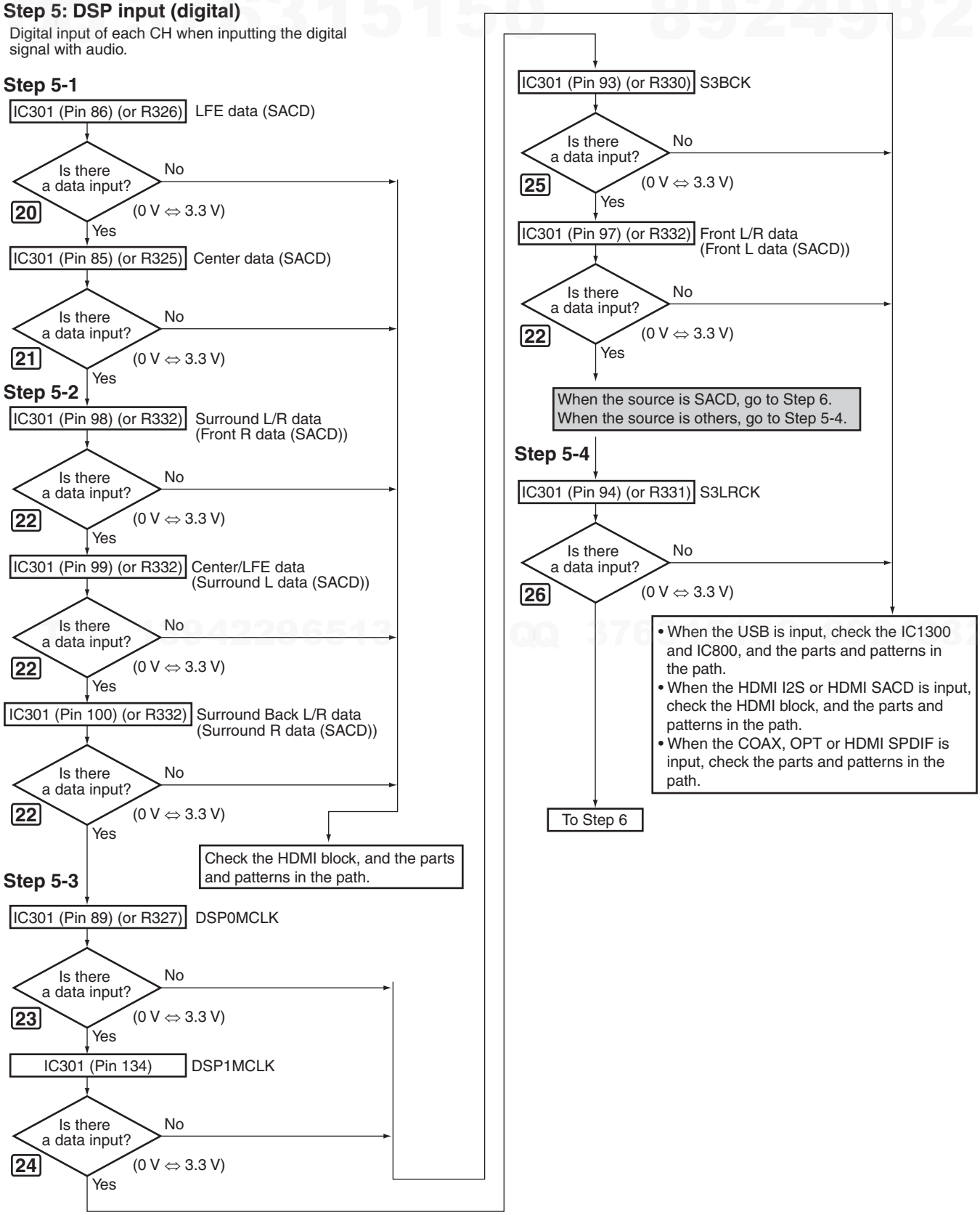

http://www.xiaoyu163.com

http://www.xiaoyu163.com

Step 6: DSP output (digital)

Digital output of each CH when inputting the digital signal with audio.

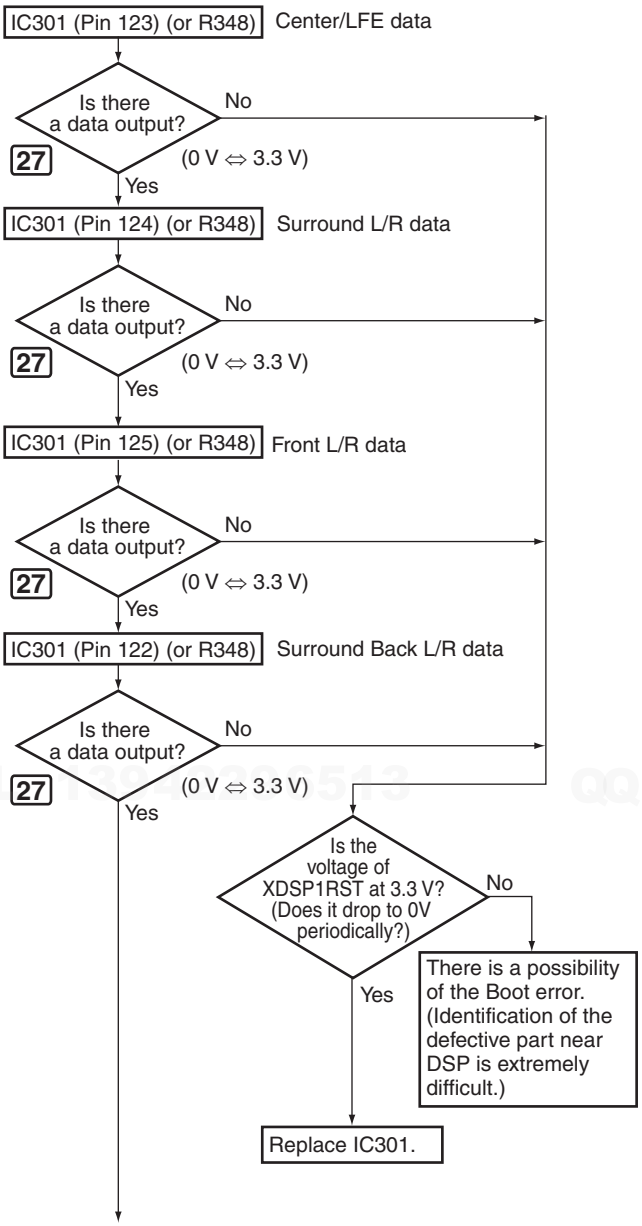

Digital output of each CH when inputting the digital signal (-∞ dB (no audio)).

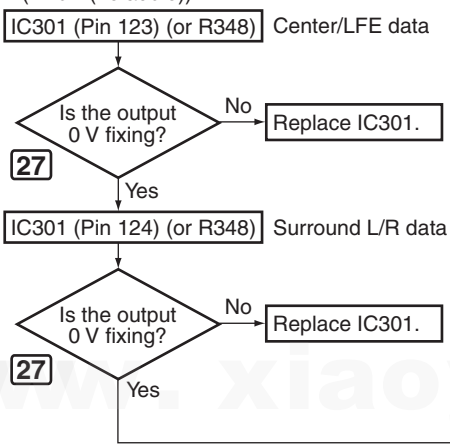

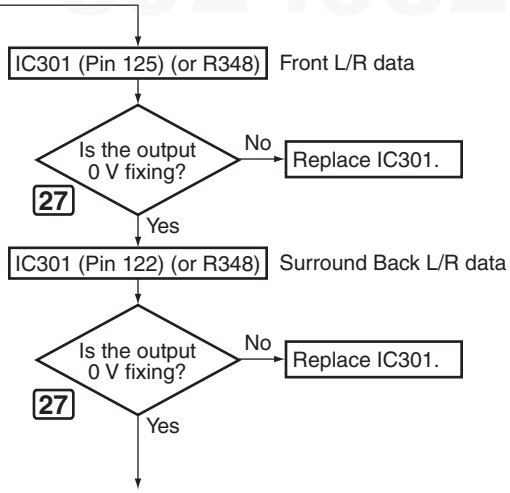

DAC Buffer

Check that the clock signal is output.

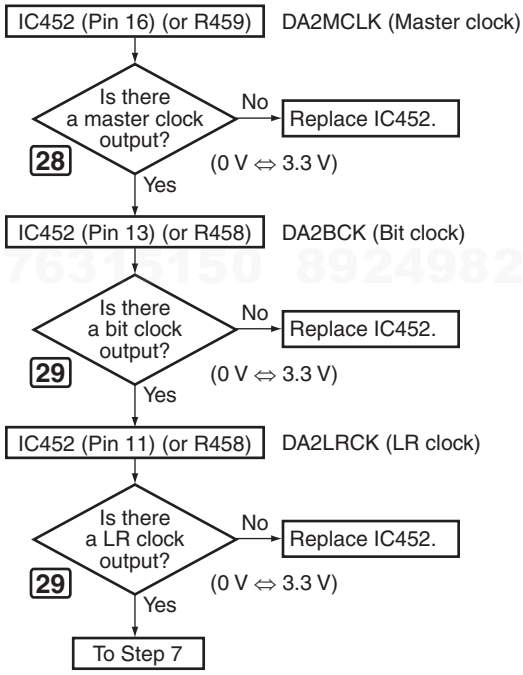

http://www.xiaoyu163.com

http://www.xiaoyu163.com

Step 7: DAC output (analog)

Analog output of each CH when inputting the digital signal with audio.

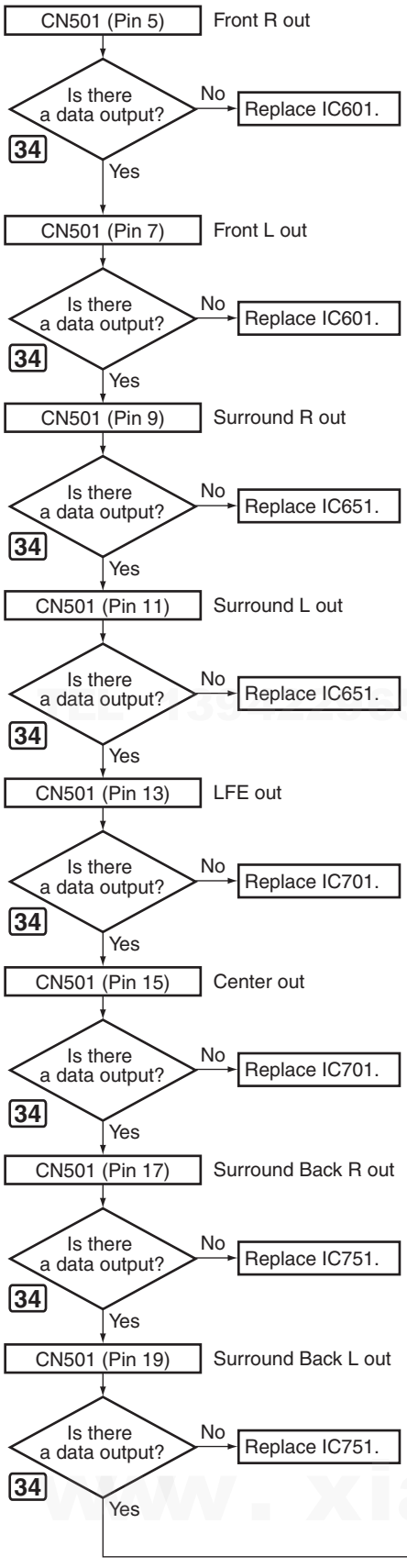

Analog output of each CH when inputting the digital signal (-∞ dB (no audio)).

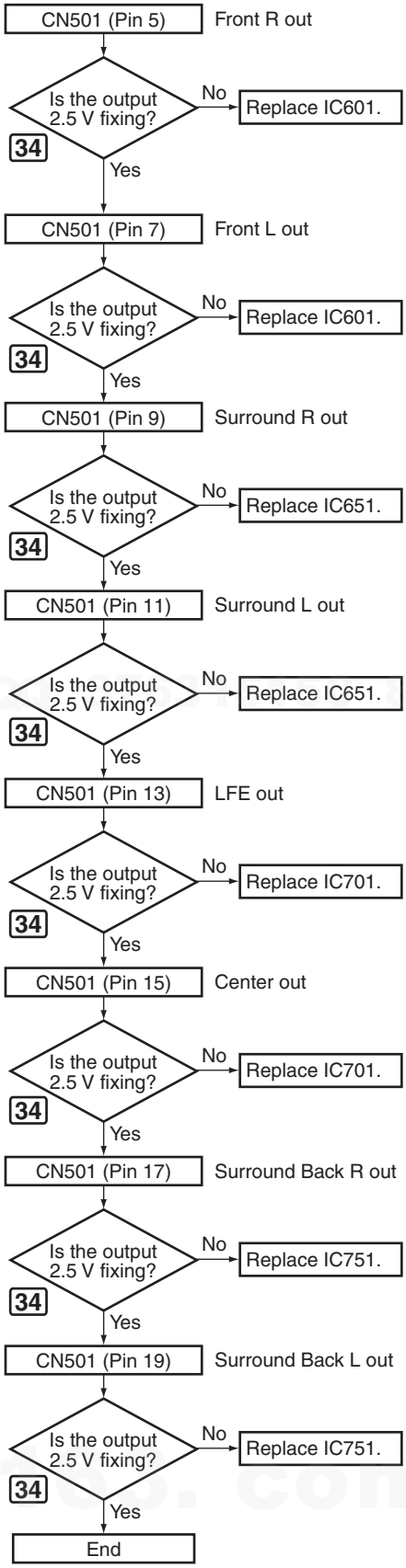

http://www.xiaoyu163.com

http://www.xiaoyu163.com

■ Check Points of the DIGITAL MAIN Assy

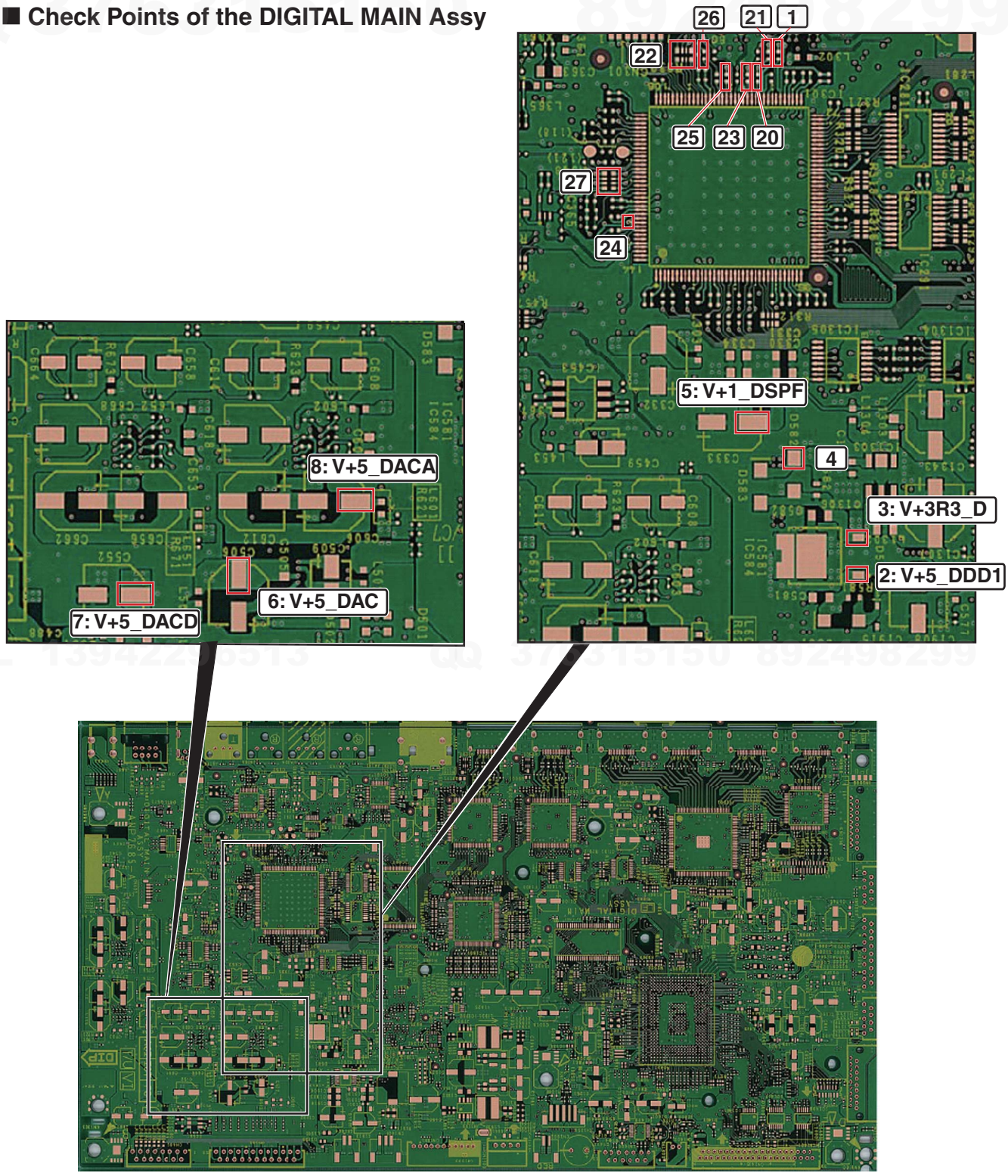

D DIGITAL MAIN ASSY

SIDE A

http://www.xiaoyu163.com

http://www.xiaoyu163.com

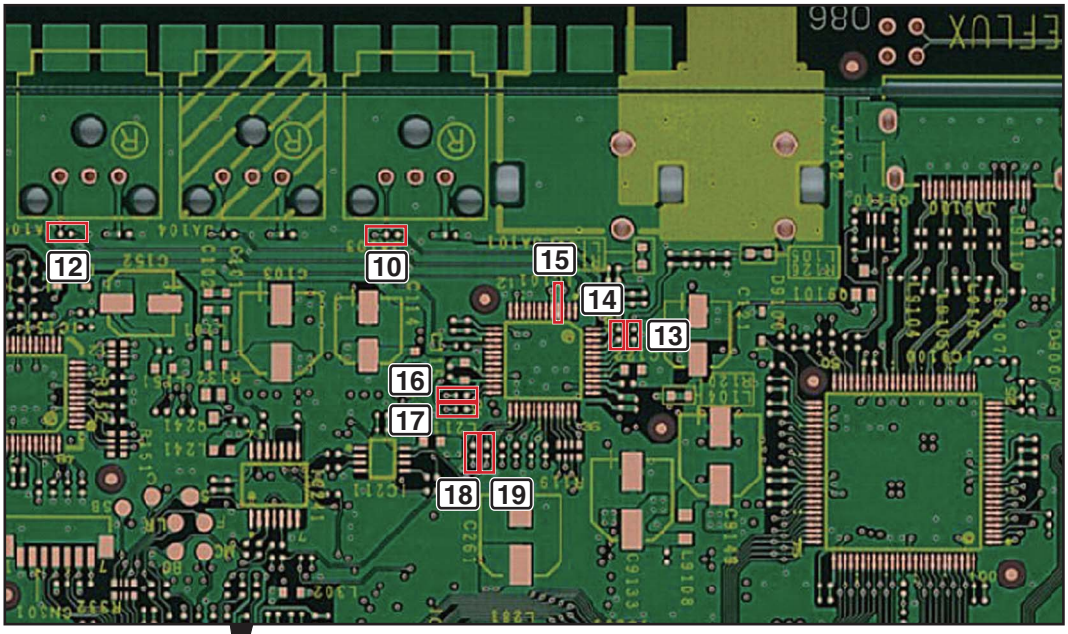

D DIGITAL MAIN ASSY

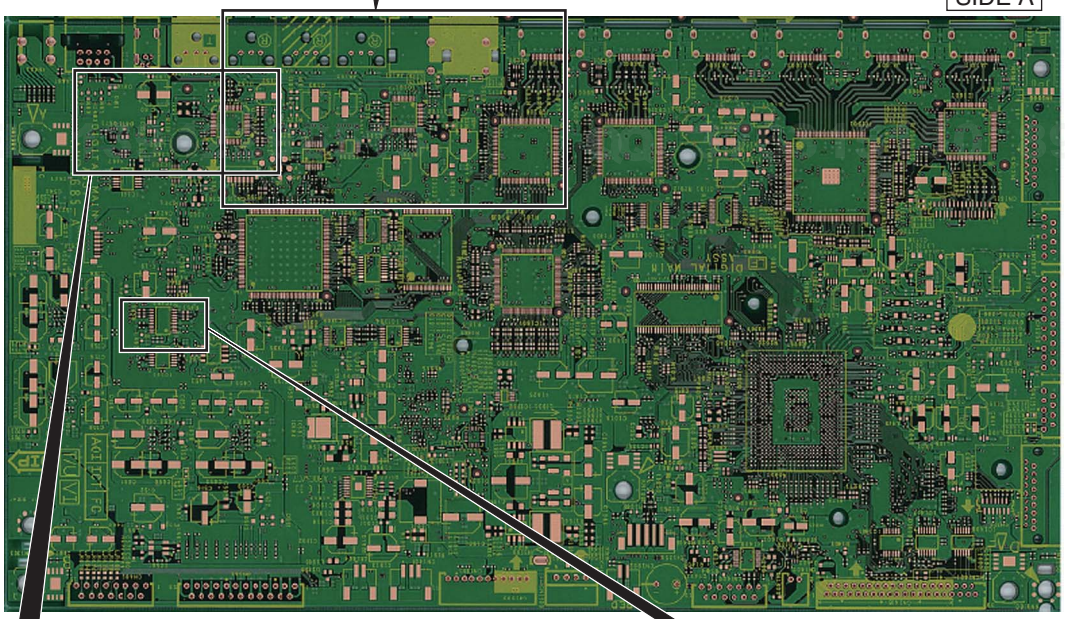

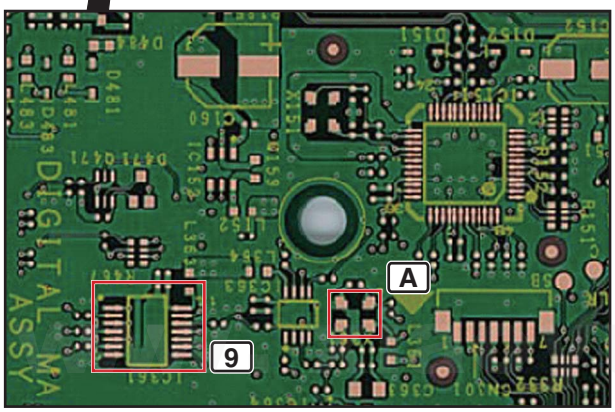

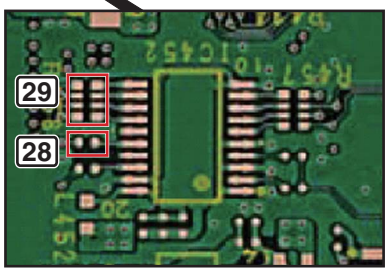

http://www.xiaoyu163.com

http://www.xiaoyu163.com

■ Conditions for selecting SPDIF or I2S output (HDMI transmission)

Indistinguishable → DVD-V

Indistinguishable → DVD-A

	pcm	fs (kHz)	Layout	SPDIF	I2S (3 lines)
	Compression DVD-V	48	2ch	Yes	No
	Compression *.WAV	44	2ch	Yes	No
		48	2ch	Yes	No
	dts-CD	44	2ch	Yes	No
	PCM	44	2ch	Yes	No
		48	2ch	Yes	No
	DVD-V	96	2ch	No	Yes
	LPCM	44	2ch	Yes	Yes
			Multi	No	Yes
		48	2ch	Yes	Yes
			Multi	No	Yes
		88	2ch	No	Yes
			Multi	No	Yes
	DVD-A	96	2ch	No	Yes
			Multi	No	Yes
		176	2ch	No	Yes
			Multi	NA	NA
		192	2ch	No	Yes
			Multi	NA	NA

SACD	2ch	No	Yes	(DSD)
	Multi	No	Yes	(DSD)

dts HD Master Audio	No	Yes
dts HD High Resolution Audio	Yes	No
dts HD LBR	Yes	No
Dolby TrueHD	No	Yes
Dolby Digital Plus	Yes	No

http://www.xiaoyu163.com

http://www.xiaoyu163.com

■ HDMI & DVC Block Troubleshooting

<When no image is displayed after the unit is turned on, the HDMI LED on the front panel lights, and the HDMI or analog signal is input.>

- If conversion between 480i and 480p is not possible, it is most likely that IC800 is in failure. Check its peripheral circuits.
- Assume that the LCRs are neither in poor connection nor damaged.
- Although diagnosis is assumed to be performed from Side A, the wiring numbers on Side B are also described in the flowchart.
- This shows failure analysis for the HDMI & DVC Block of the DIGITAL MAIN Assy.
- The parts marked like **A** in the following chart are located in "Check Points of the DIGITAL MAIN Assy."

Step 1: Power supply

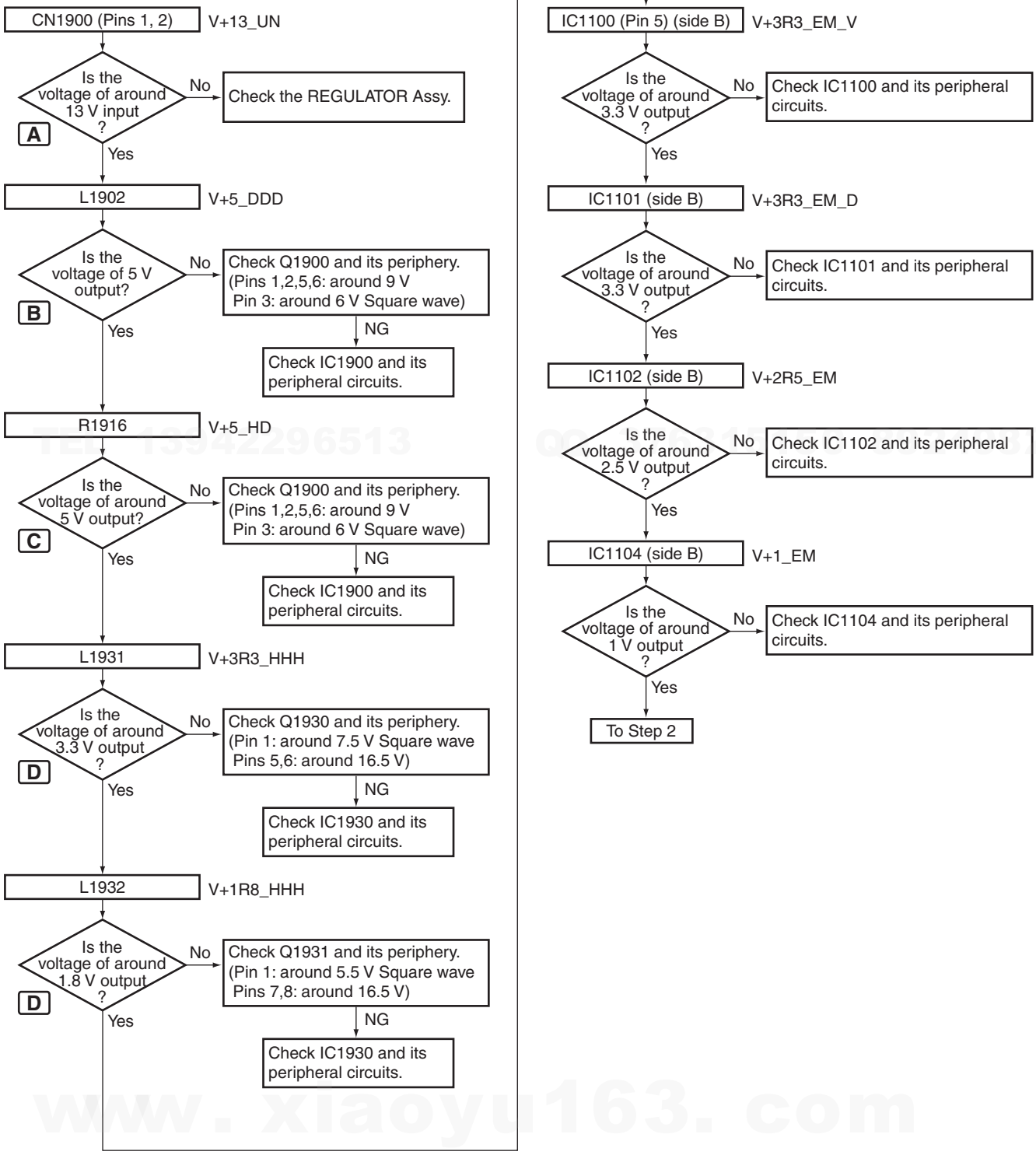

http://www.xiaoyu163.com

http://www.xiaoyu163.com

Step 2: X'tal

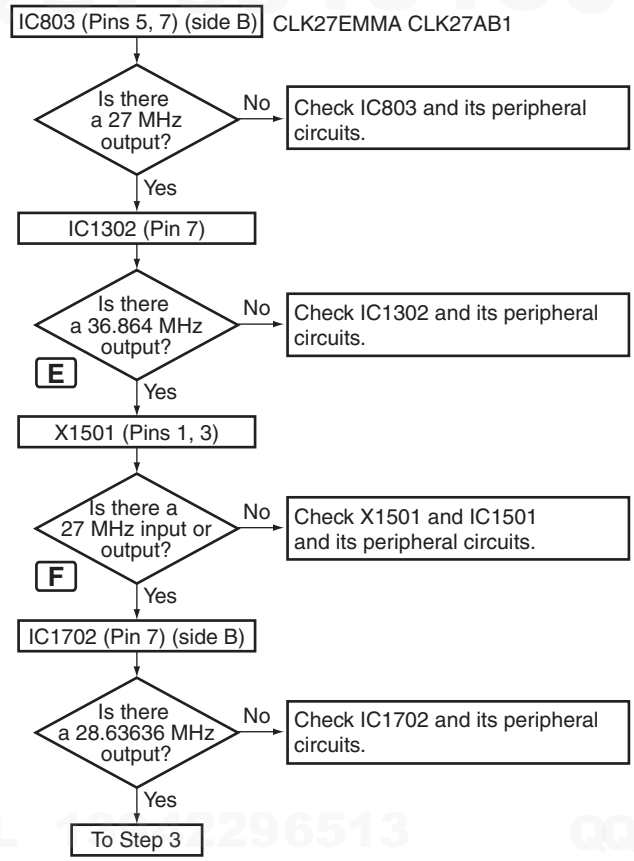

Step 3: RESET

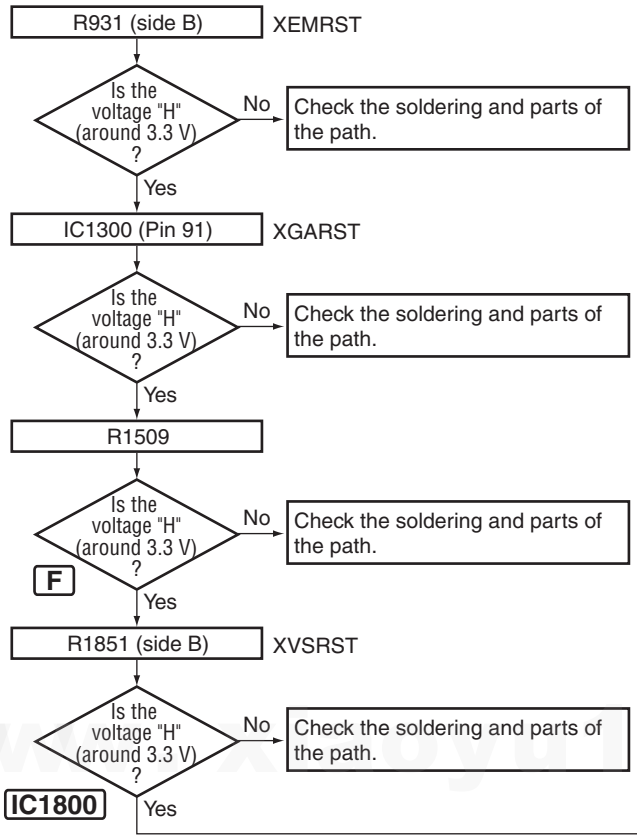

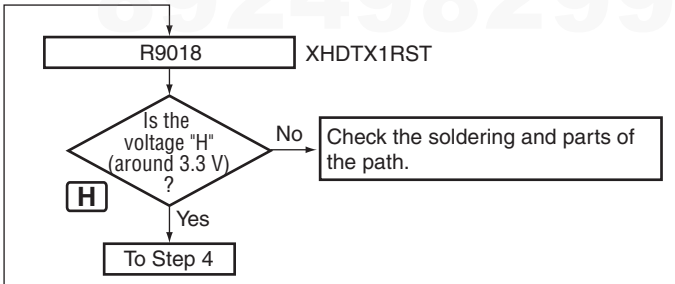

Step 4: HDMI

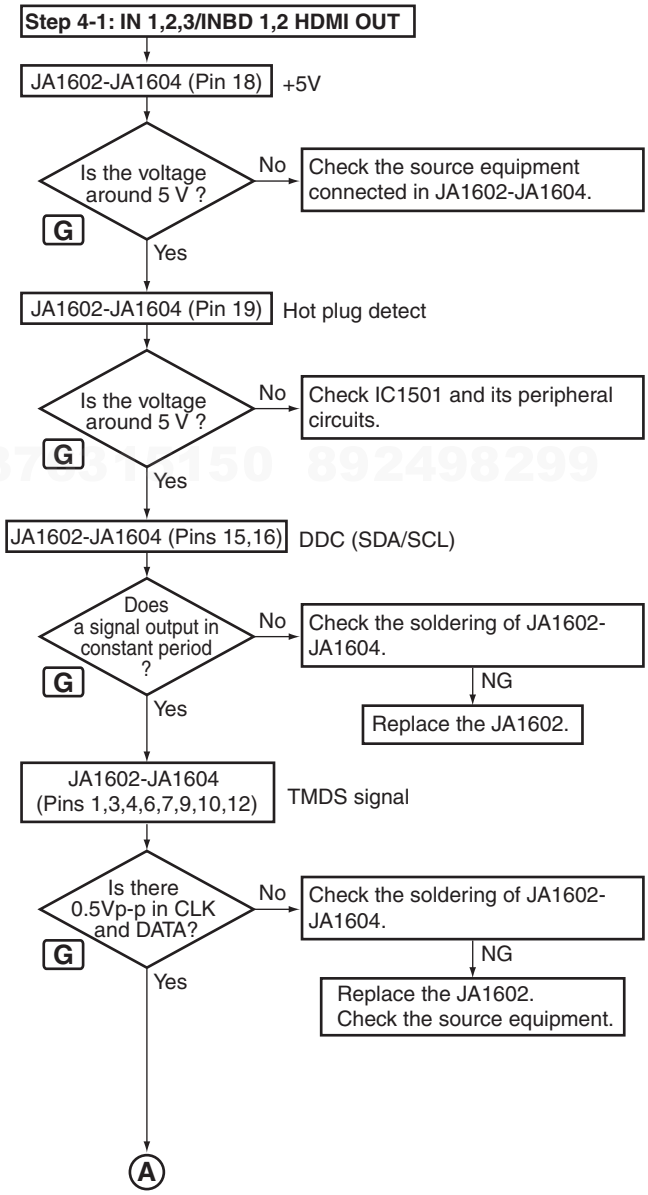

http://www.xiaoyu163.com

http://www.xiaoyu163.com

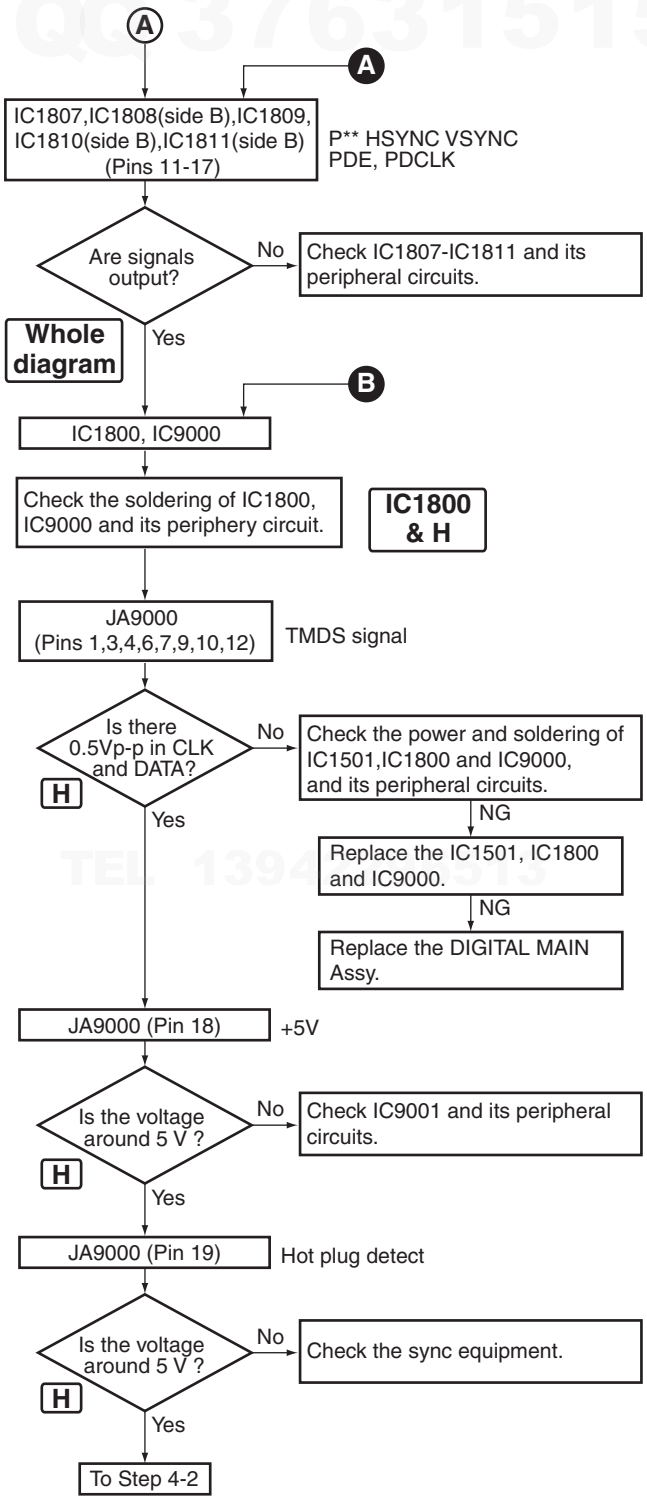

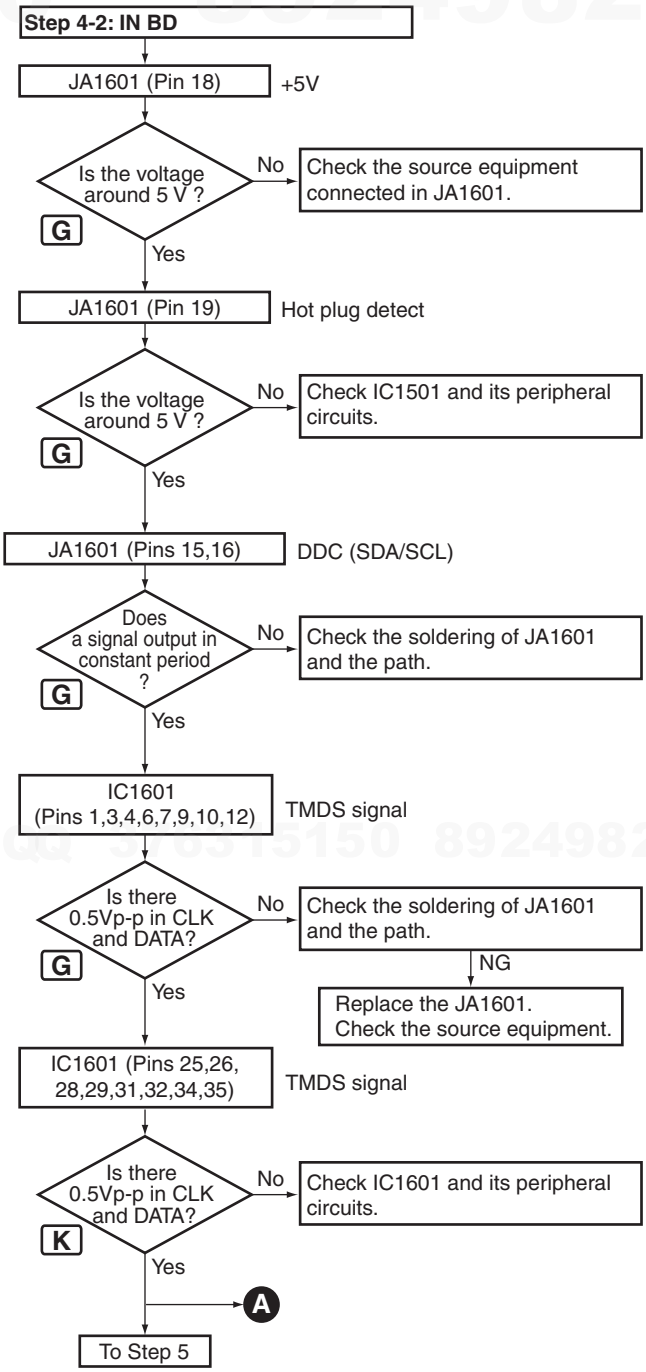

http://www.xiaoyu163.com

http://www.xiaoyu163.com

Step 5: COMPONENT IN

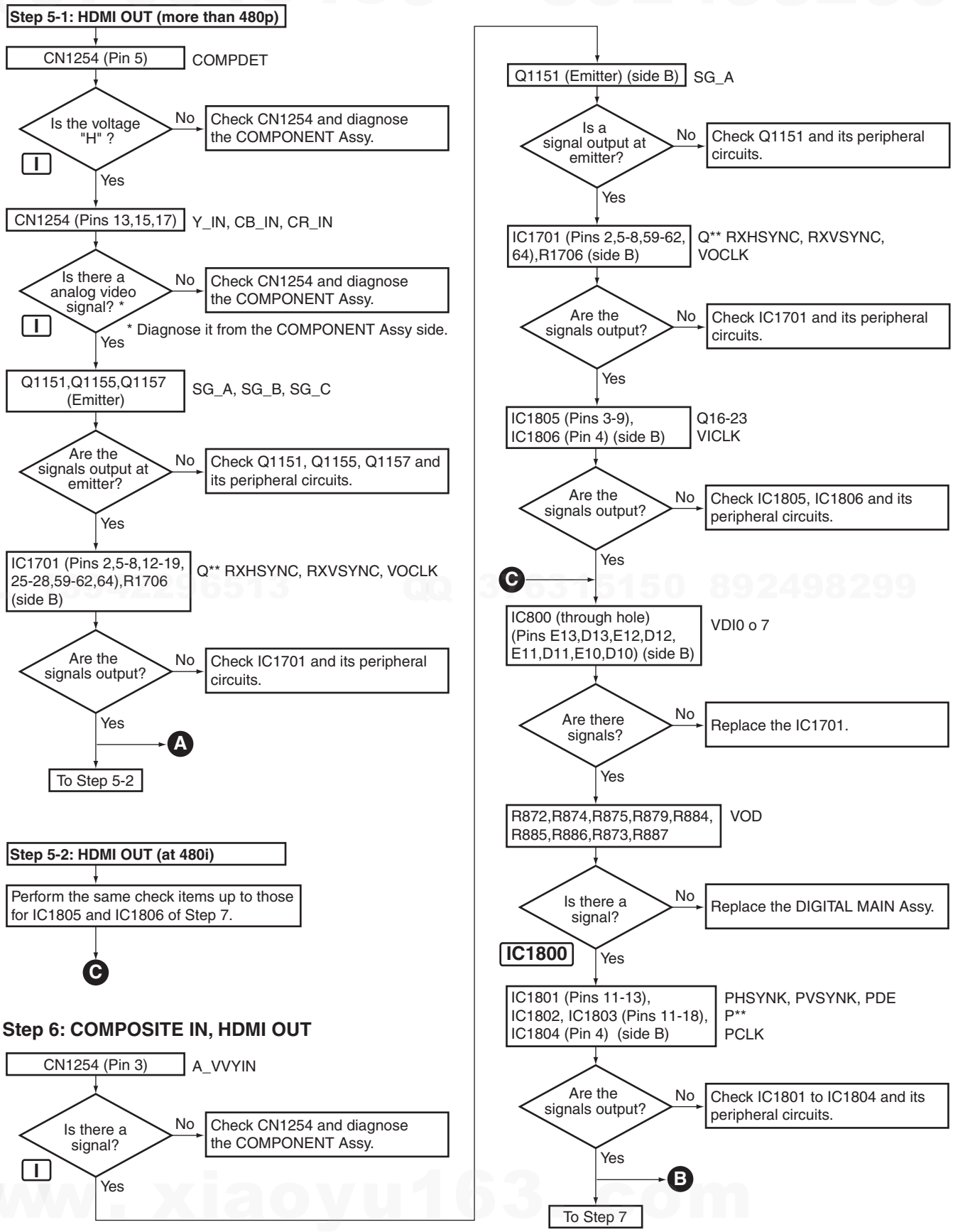

Step 6: COMPOSITE IN, HDMI OUT

http://www.xiaoyu163.com

http://www.xiaoyu163.com

Step 7: COMPONENT IN (at DVC ON) COMPONENT OUT (at 480i)

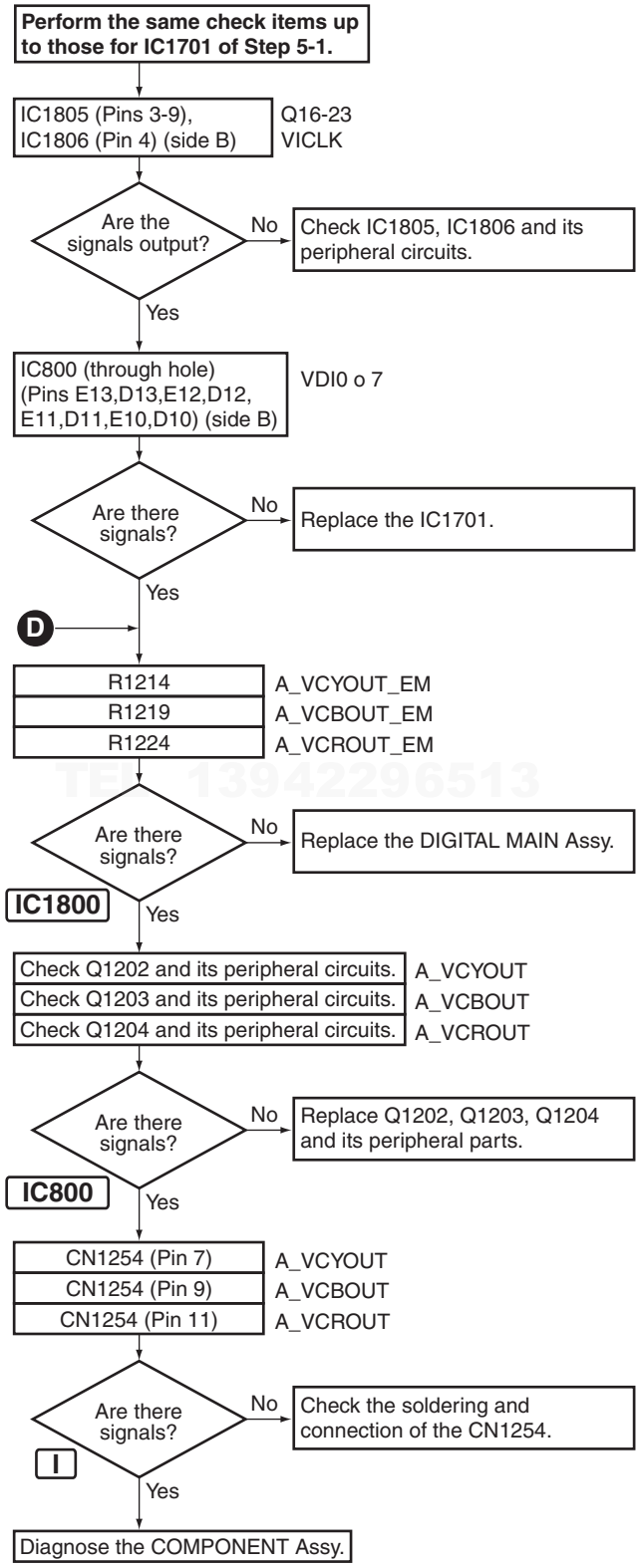

Step 8: COMPOSITE IN COMPOSITE OUT

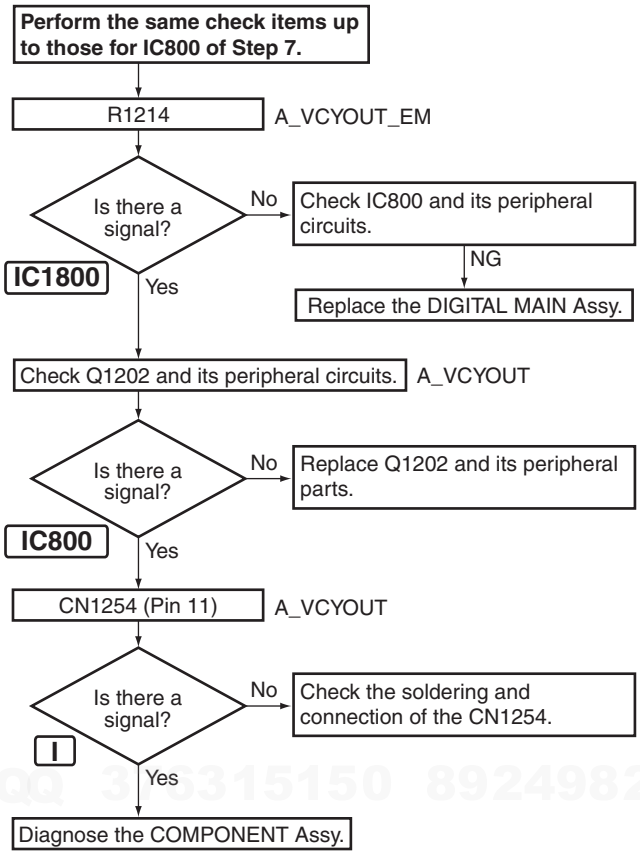

Step 9: GUI/JPEG (USB) COMPOSITE/COMPONENT OUT

Go to D.

Step 10: GUI/JPEG (USB) HDMI OUT

Go to C.

www.xiaoyu163.com

http://www.xiaoyu163.com

http://www.xiaoyu163.com

■ Check Points of the DIGITAL MAIN Assy

: HDMI & DVC block

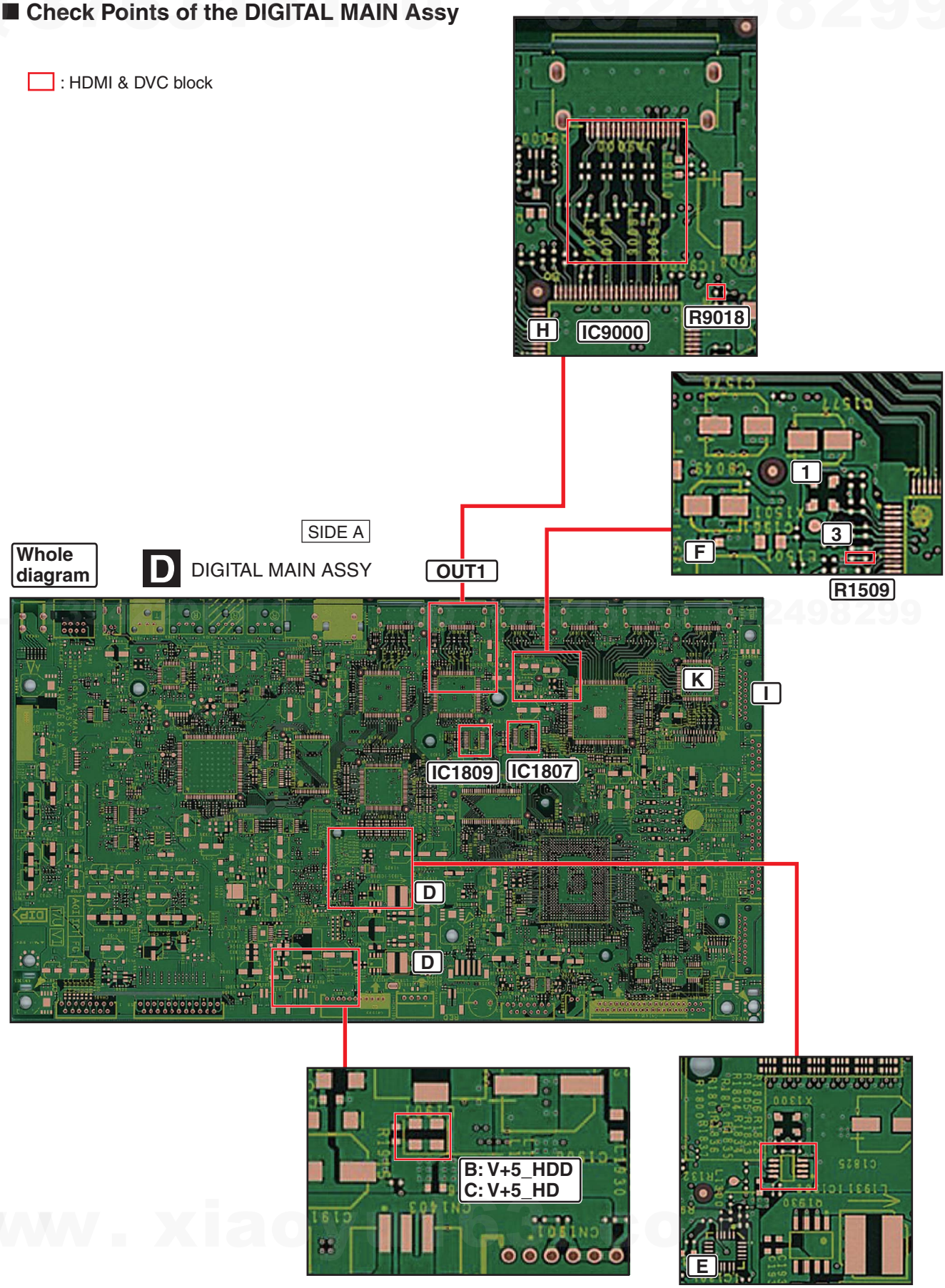

http://www.xiaoyu163.com

http://www.xiaoyu163.com

Note: In the figure of the points to be checked, those when signals are input to the IN BD/IN 1 connector are indicated. The points to be checked for other connectors are the same.

: HDMI & DVC block

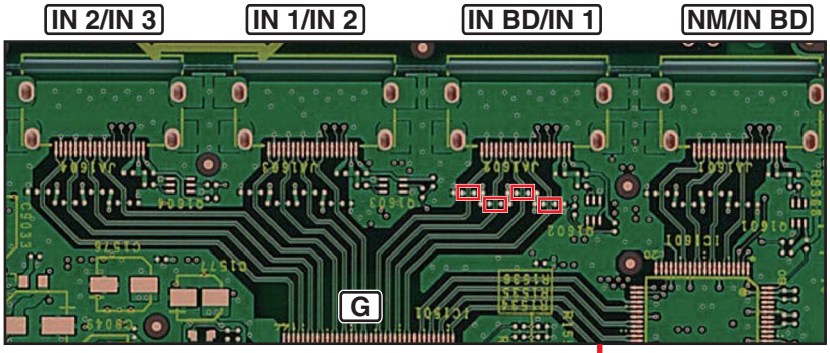

SIDE A

D DIGITAL MAIN ASSY

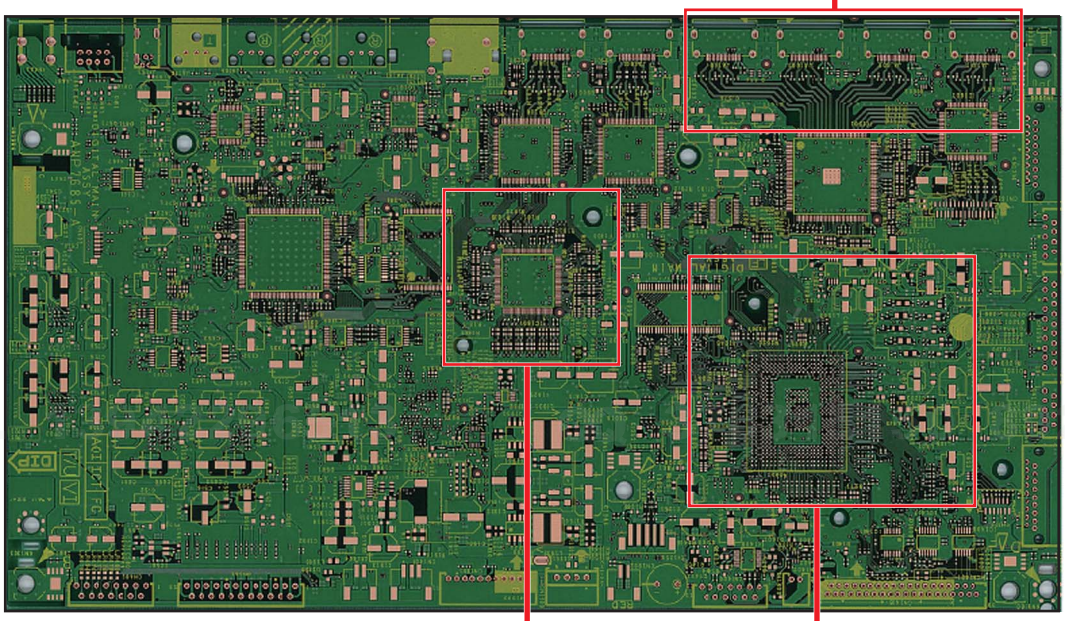

IC1800

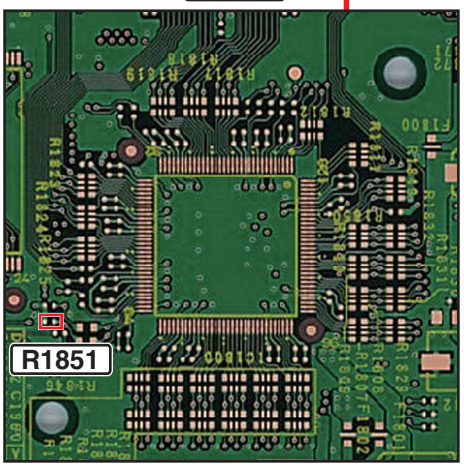

IC800

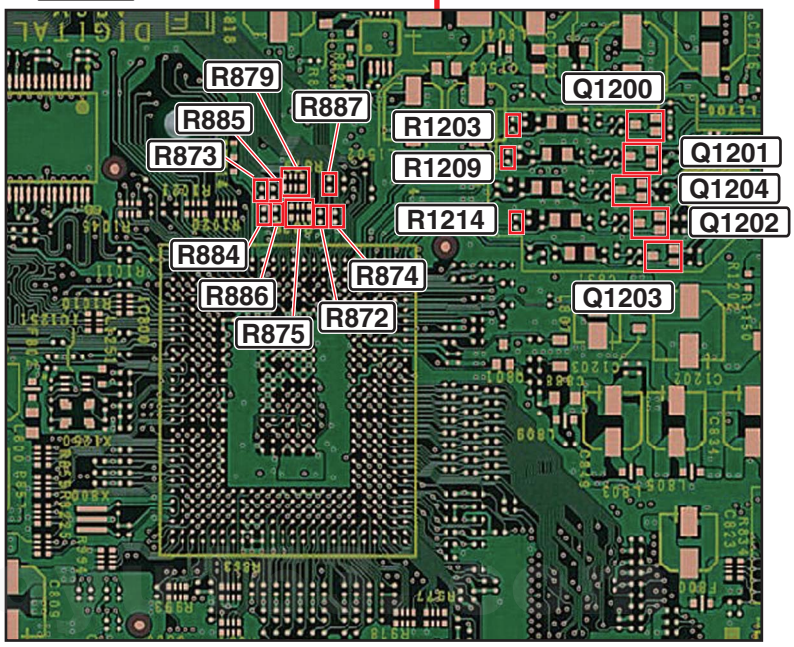

http://www.xiaoyu163.com

http://www.xiaoyu163.com

5.2 CIRCUIT DESCRIPTION

[1] Protection Circuit Process List

Item	Purpose	Detection Method	Process	Warning Indication	Remarks
DC detection	To detect amplifier damage (defect status) A process to protect speakers (for protection of connected external devices)	Detects when the DC_PROTECT port becomes "L". (Pin 80 of IC3004)	Turns muting on and speaker relay off, then turns off the power after 3 seconds. Then flashes MCACC indicator.	Flashing "AMP ERR" for 3 seconds.	Once detected and turned the power OFF. Standby/ON button will be disabled. Press “TUNE-” & “Multi-zone ON/OFF” button together for 5 seconds, the unit will re-check again the DC detection port. If the DC detection port become “H” for 3 seconds, the unit will returns to normal condition automatically.
AMP overload	To detect overloading (abnormal status) With low-load driving or a short circuit of the speaker terminals (for protection of the amplifier)	Detects when the OL_DET port becomes "L" (checks by interrupt). (Pin 71 of IC3004)	Turns muting on and speaker relay off, and immediately turns off the power. Then flashes PHASE CONTROL indicator.	None	

■ DC Detection Circuit

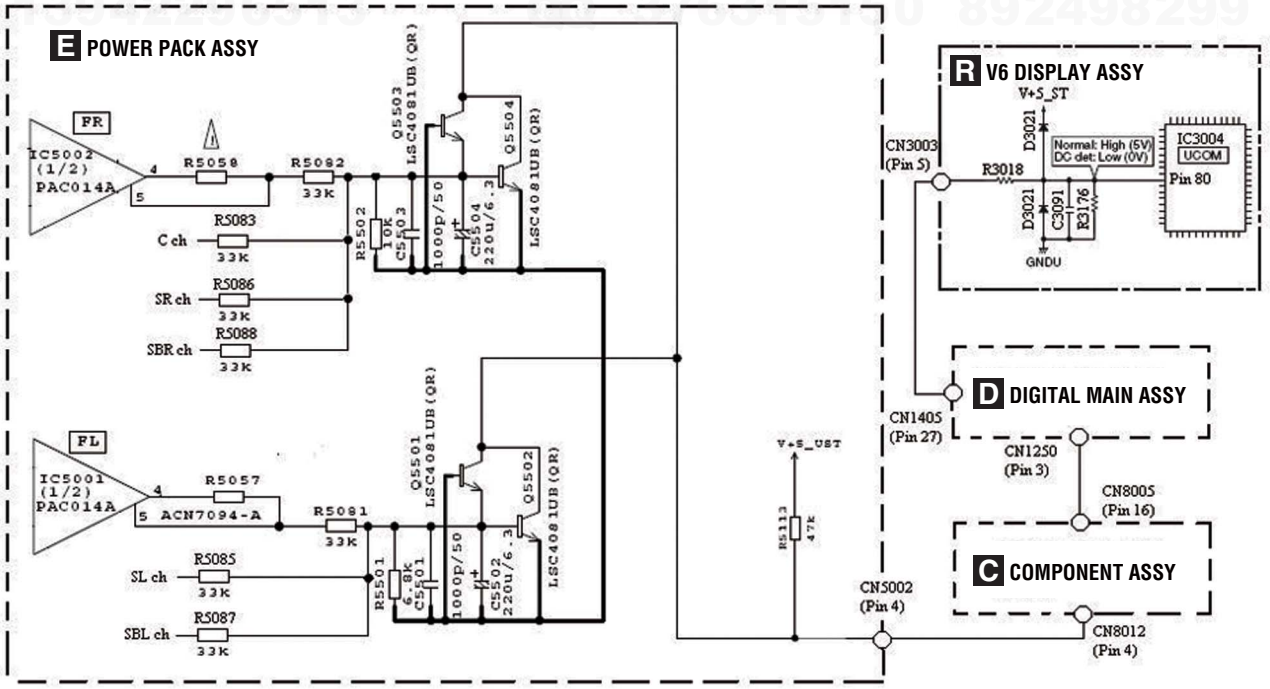

+DC Detection: Q5502/ Q5504 Base = "H"
Collector of Q5501, Q5502, Q5503 & Q5504 become "L"
-DC Detection: Q5501/ Q5503 Emitter is minus to the Base.
Collector of Q5501, Q5502, Q5503 & Q5504 become "L"

http://www.xiaoyu163.com

http://www.xiaoyu163.com

■ OL (Over Load) Detection Circuit

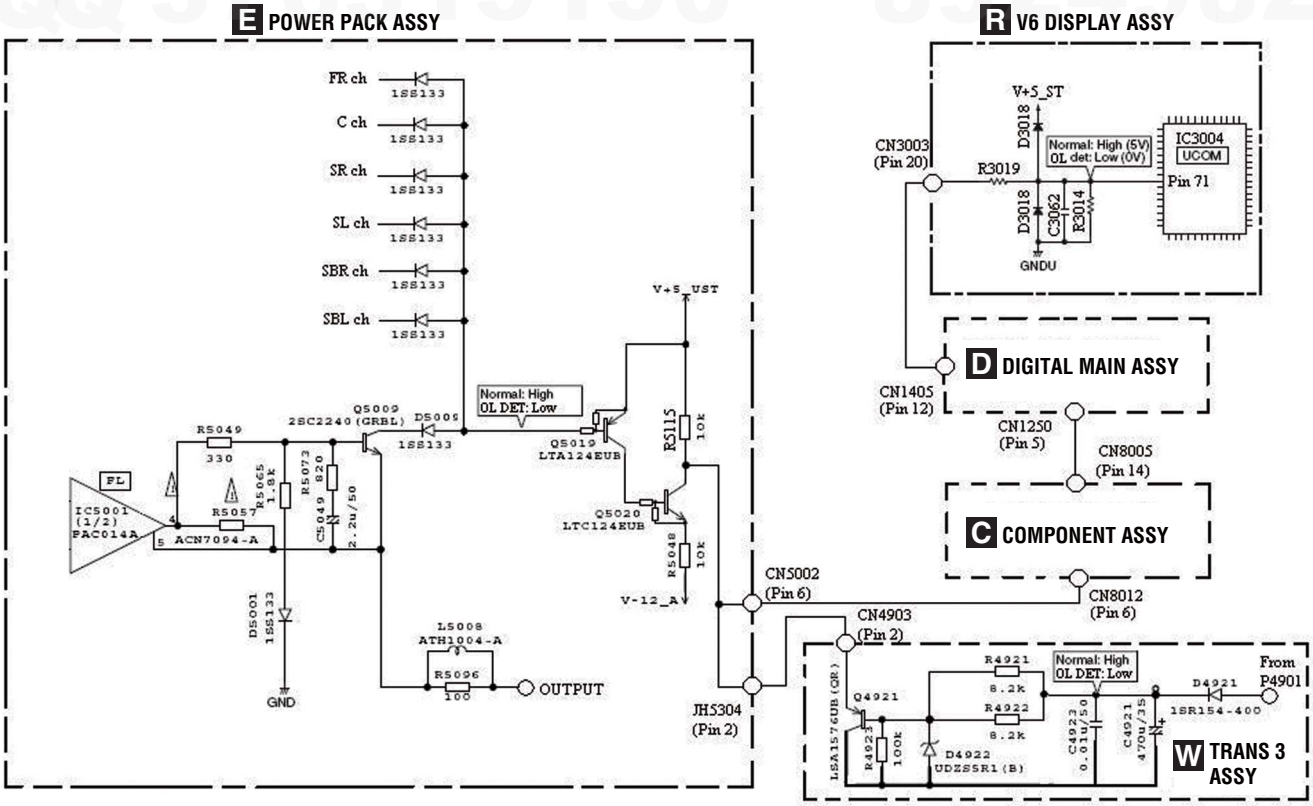

http://www.xiaoyu163.com

http://www.xiaoyu163.com

[2] Protection Circuit Process List (XPROTECT)

Item	Purpose	Detection Method	Process	Warning Indication	Remarks
XPROTECT	AMP power supply circuit, Fan failure detection circuit and Transformer short circuit detect.(defect status) -Observe the voltage of +VPRE and -VPRE. -Observe the voltage of Fan Stop. -Observe the voltage of REGB+ and REGB-	Detects when the XPROTECT port becomes "L". (Pin 83 of IC3004)	Turns muting on and speaker relay off, and immediately turns off the power. Then flashes POWER LED.	None	Once detected and turned the power off.

■ XPROTECT Circuit

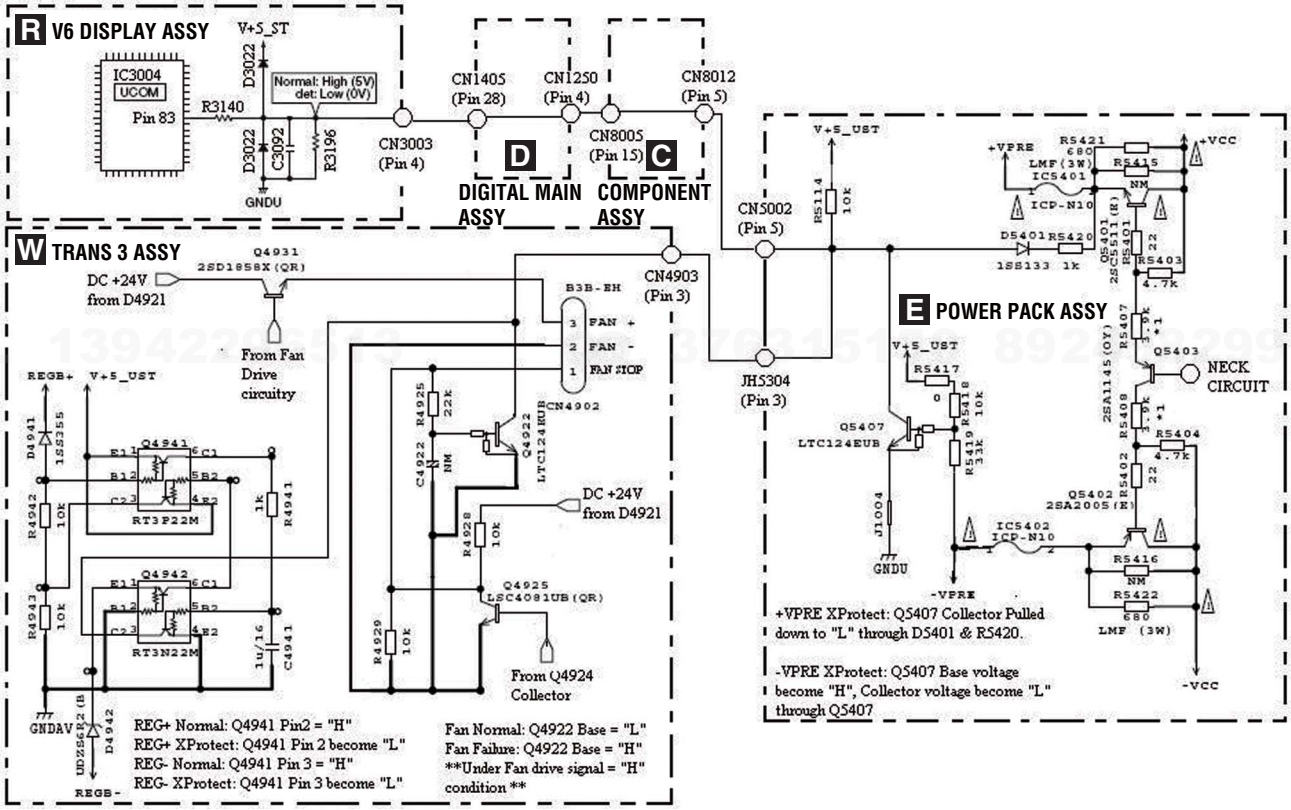

http://www.xiaoyu163.com

[3] Error Indications When an Abnormality in The Amplifier System Is Detected

[Purpose]

Errors upon detection of abnormalities in the amp system are indicated.

[Error Indications]

	FL Display	LED flashes	Status	Timing (sec.)	Description	Remarks
(1)	AMP ERR	ADVANCED MCACC LED	When the AMP DC is detected.	FL flashes 3 times. LED flashes after the power off.	After a failure in the amplifier block or high DC output is detected, the shutdown process starts, then the power will be shut off. Then the ADVANCED MCACC LED will flash. The power cannot be turned on again. If you wish to turn on the unit after a shutdown activated by DC detection, enter DC detection cancellation mode, by proceeding with the steps described in "How to enter release mode" below.	
(2)	NA	PHASE CONTROL	“AMP overload” detection.	LED flashes after the power off.	Upon detection of overcurrent at the amp output stage, the unit power off immediately, and the PHASE CONTROL LED starts flashing. The previous stage will be restored when the unit is turned back on.	
(3)	NA	POWER LED	When an abnormality is detected in the ouput voltage of the power supply circuit.	LED flashes after the power off.	If abnormality voltage is detected in the power supply VPRE circuit, the unit power off immediately, and the POWER LED starts flashing. To restore the previous status, turn the unit back on after 1 minutes.	Abnormality detection in the power supply VPRE circuit
(4)	NA	CENTER BLUE LED	When an abnormality is detected in the ouput voltage of the Digital power supply.	LED flashes after the power off.	If abnormality voltage is detected in the Digital power supply circuit, the unit power off immediately, and the CENTER BLUE LED starts flashing. To restore the previous status, turn the unit back on.	
(5)	Over Current	NA	When the overload USB device (over 500 mA) is connected.		The connected USB device is overload.	
(6)	HDCP ERROR	NA	When an HDCP ERROR is detected.	Flashes 5 seconds	The monitor does not support HDCP type or is in standby mode.	Warning indication for HDMI Simplay

[How to Enter Release Mode]

During Standby mode, simultaneously press and hold the "TUNE-" and "MULTI-ZONE ON/OFF" keys for 5 seconds.

http://www.xiaoyu163.com

http://www.xiaoyu163.com

6. SERVICE MODE

6.1 TEST MODE

[1] Detected protection history

[Purpose]

The numbers of detections for various protection processes are displayed.

[How to enter/exit]

Turn off the power to this unit by setting the main volume level to “---dB” and Multi-zone to “OFF”.
During Standby mode, simultaneously press and hold “MULTI-ZONE ON/OFF” and “ENTER” keys for 5 seconds to enter this mode.

[Basic operations]

Key operation	FL display
Display number of times DC is detected.	DC : ＊＊＊
[↓] [↑]	
Display number of times OVERLOAD is detected.	OL : ＊＊＊
[↓] [↑]	
Display number of times COMBINATION is detected. (Detects DC and OVERLOAD simultaneously)	COM : ＊＊＊
[↓] [↑]	
Display number of times Power abnormality is detected.	XPRT : ＊＊＊
[↓] [↑]	
Display number of times AMP overheat is detected.	STMP : ＊＊＊
[↓] [↑]	
Display number of times Digital Power abnormality is detected.	DERR : ＊＊＊
[↓] [↑]	
Resetting the number of times error is detected.	RESET ◀HOLD▶
[↓] [↑]	

Front Panel Key

[↓] : TUNE-
[↑] : TUNE+
[←] : PRESET-
[→] : PRESET+

Resetting the number of times error is detected

Key operation	FL display
[←][→]	RESET ◀CLEAR?▶
[ENTER]	RESET ◀ RESET ▶
↓ Continued	

www.xiaoyu163.com

http://www.xiaoyu163.com

http://www.xiaoyu163.com

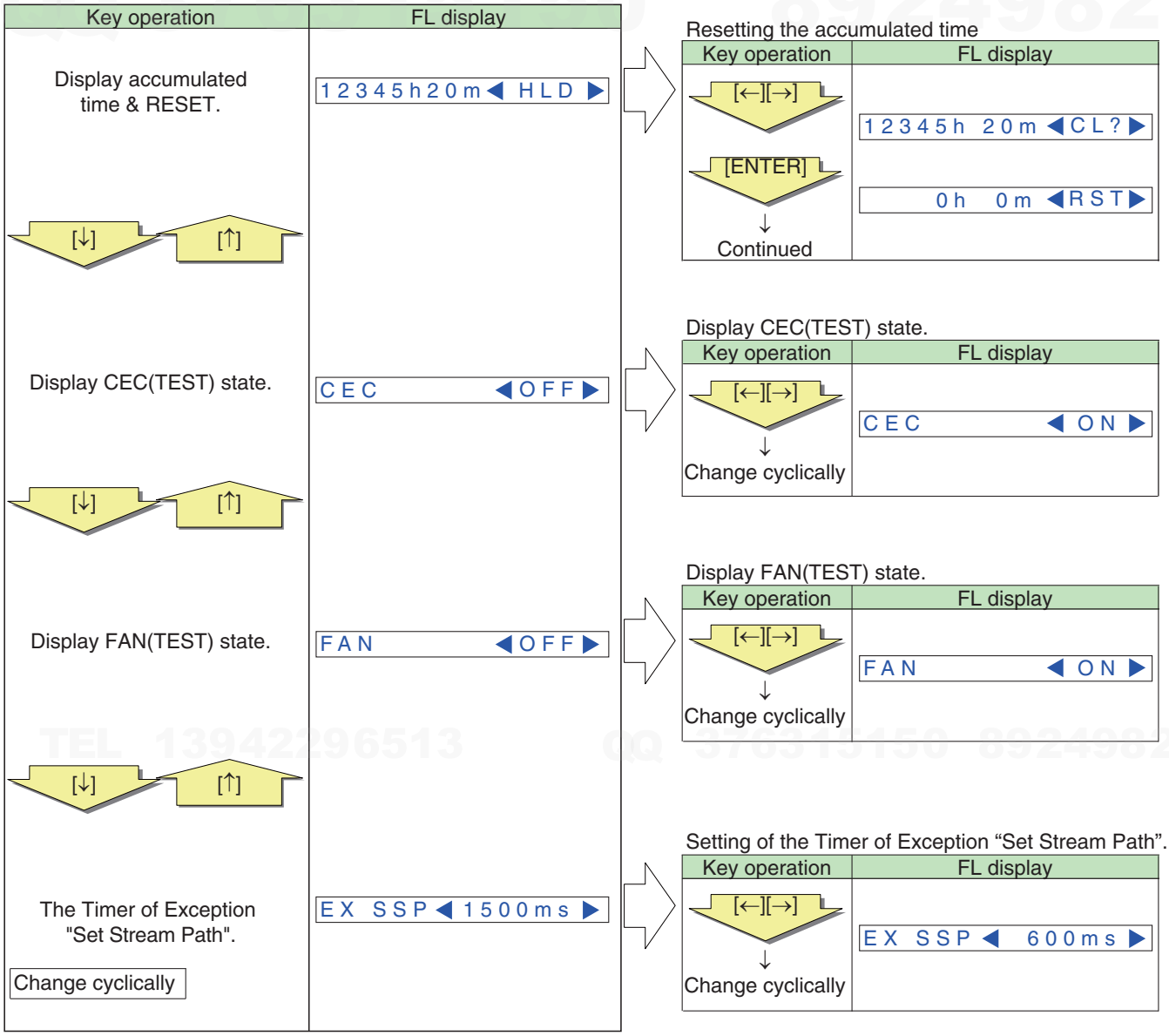

[Description]

CEC TEST : The function for making the HDMI output terminal to output 1kHz square wave.
If the square wave is output, the CEC line is considered to be normal.

FAN TEST : The function for making the FAN to be forced to rotate.

http://www.xiaoyu163.com

http://www.xiaoyu163.com

7. DISASSEMBLY

Preparations Before Performing Diagnosis of the POWER PACK Assy

Before performing diagnosis of the POWER PACK Assy, it is necessary to discharge C5301 and C5302 on the board. (See the photo below.)
If you don't, the Power Pack ICs (IC5001, IC5002, and IC5003) on the board may be damaged.

[Procedures]

1. Unplug the power cord.
2. Lift the UL tube at the location near C5301 and C5302 so that the periphery of D5301 becomes accessible.
3. Connect J192 and J1005 (or J1006 or J1007), as well as J195 and J1005 (or J1006 or 1007).
   With the above connections, Pins 1 and 4 of D5301 are grounded to the ground points and discharged.
   Note: For discharging, use a load of 100 Ω , 3 W or more, to protect the IC protectors. Do NOT discharge instantly by short-circuiting.
4. Check that the voltage between the electrodes of each C5301 and C5302 is 1 V or less.

POWER PACK Assy

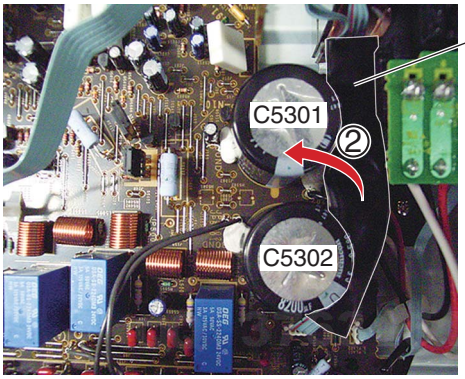

POWER PACK Assy

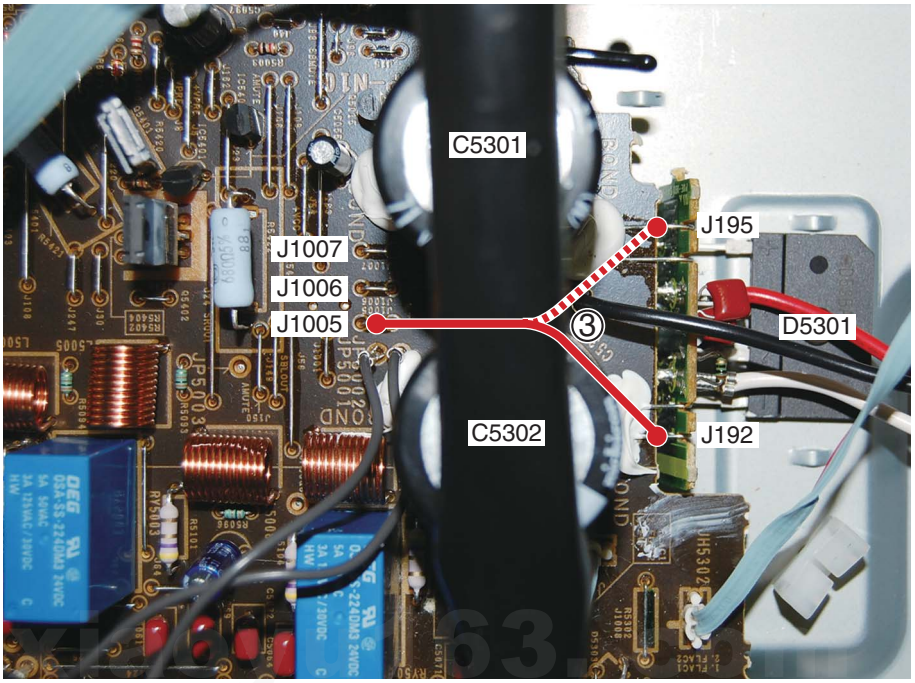

http://www.xiaoyu163.com

http://www.xiaoyu163.com

Ground points

Note:
The points marked below must be grounded when the rear panel is removed.
Before turning the unit ON, be sure to ground the marked points with the chassis. Or, you may short-circuit the ground points on the solder surface, using pieces of wire.

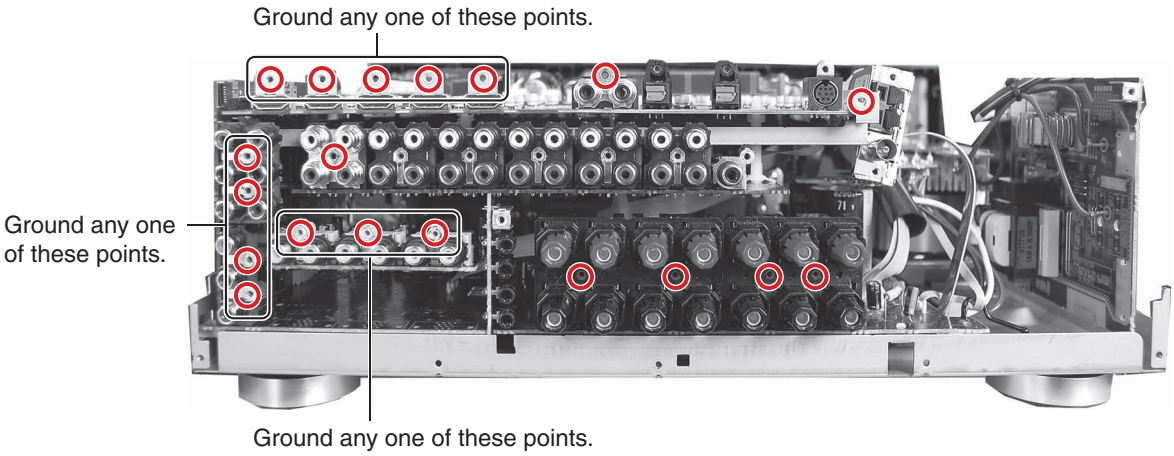

Screws for Rear panel

Ⓐ BBZ30P080FTB	Ⓑ BPZ30P080FTB	Ⓒ BMZ30P040FTB	Ⓓ BBT30P100FTB

VSX-1019AH-K only

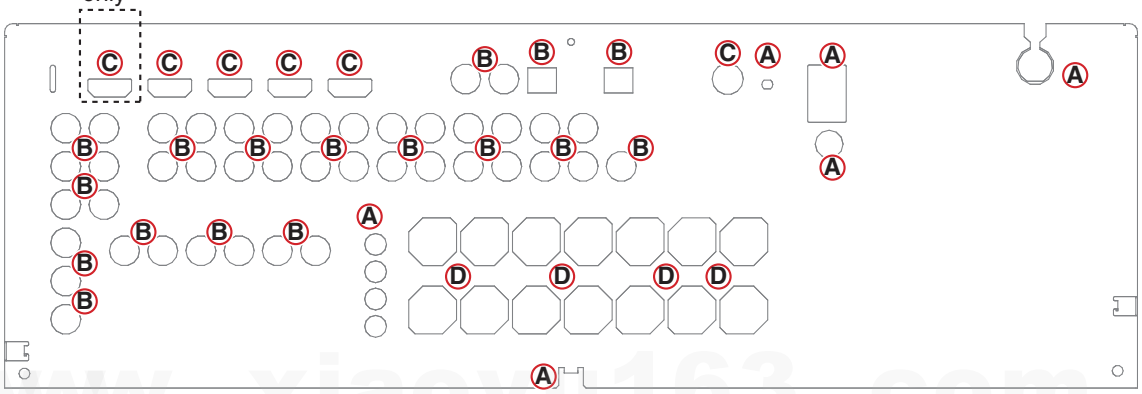

http://www.xiaoyu163.com

http://www.xiaoyu163.com

Diagnosis

Note:
(1) Even if the unit shown in the photos and illustrations in this manual may differ from your product, the procedures described here are common.
(2) For performing the diagnosis shown below, the following jigs for service is required.
• 19P board to board cable (GGD1577 x 2)

[1] DIGITAL MAIN Assy, Front Panel Section

Remove the bonnet by removing the six screws.

1. Remove the eight screws. (BBZ30P080FNI)

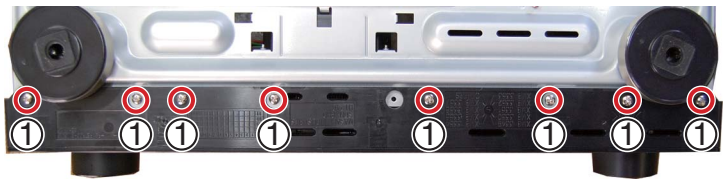

2. Release the jumper wires, as required.

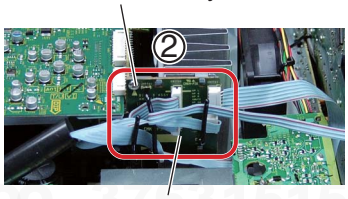

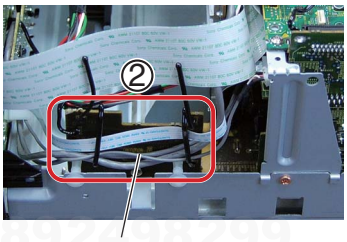

3. Remove the two screws. (BBZ30P080FNI)
4. Unhook the two hooks.
5. Remove the Front panel Section as shown in the photo below.

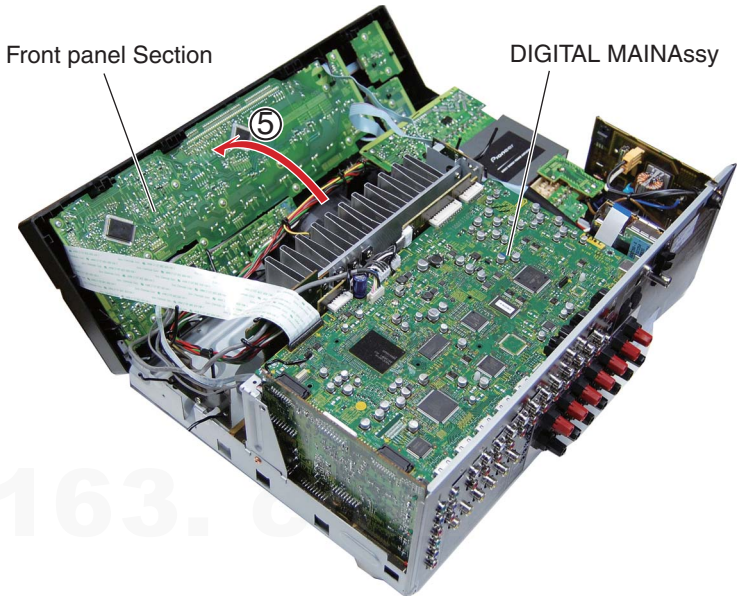

http://www.xiaoyu163.com

http://www.xiaoyu163.com

[2] POWER PACK Assy

Caution: Heatsink section in work becomes hot, and be careful with it.

Remove the bonnet by removing the six screws.

1. Remove the one screw. (BBZ30P080FNI)
2. Remove the one screw. (BBZ30P080FNI)
3. Remove the one screw. (BBZ30P080FTB)
4. Remove the two screws. (BBZ30P080FNI)

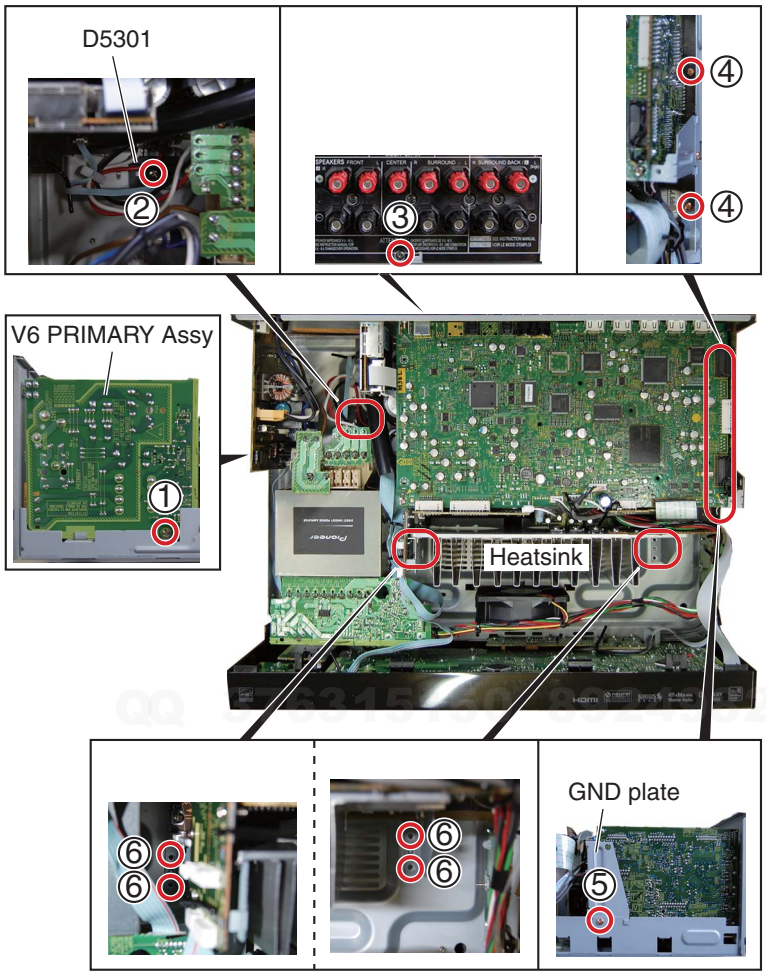

5. Remove the one screw. (BBZ30P080FNI)
6. Remove the four screws. (ABA1396)

7. Arrange the unit as shown in the photo below.
8. Connect the rear panel to the chassis ground.

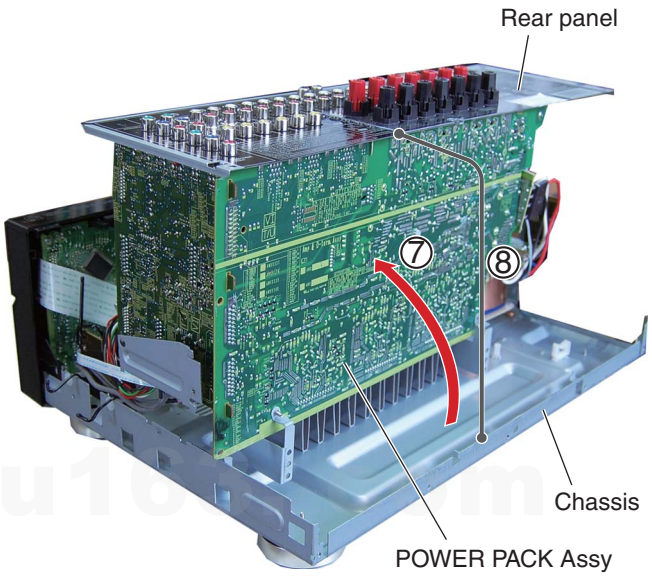

http://www.xiaoyu163.com

http://www.xiaoyu163.com

[3] COMPOSITE and AUDIO Assemblies

Remove the bonnet by removing the six screws.

1. Remove the one screw. (BBZ30P080FNI)
2. Remove the one screw. (BBZ30P080FNI)
3. Release the jumper wires, as required.

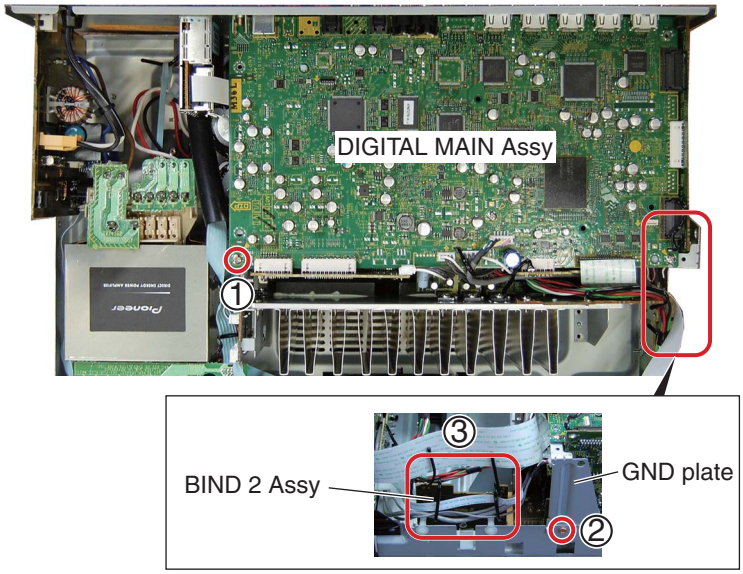

4. Remove the four screws. (BBZ30P080FTB)
5. Remove the 17 screws. (BPZ30P080FTB)
6. Remove four screws. (BBT30P100FTB)
7. Remove the six screws. (BMZ30P040FTB) (for VSX-1019AH-K)
   Remove the five screws. (BMZ30P040FTB) (for VSX-919AH-K)

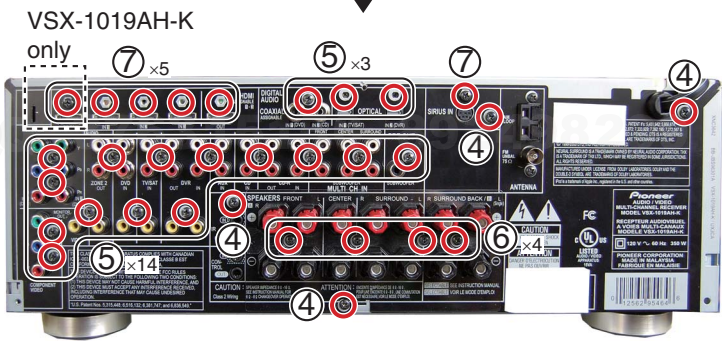

8. Arrange the unit as shown in the photo below.

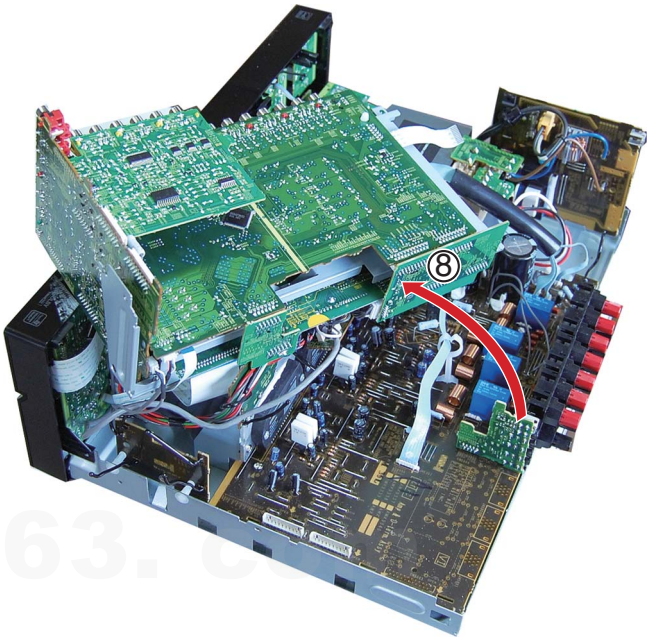

http://www.xiaoyu163.com

http://www.xiaoyu163.com

8. Reassembling the rear panel.
9. Insert the insulation sheet.

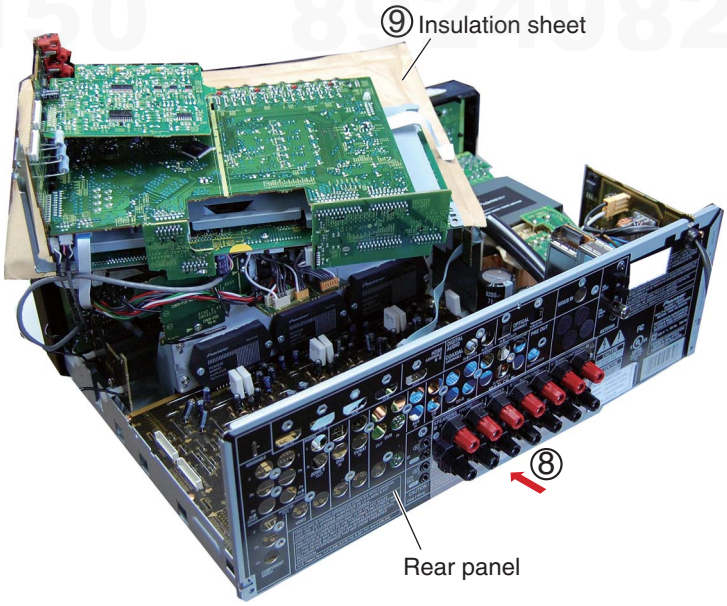

10. Connect the two board to board cables.
(COMPONENT CN8012 <-> POWER PACK CN5002)
(COMPONENT CN8015 <-> POWER PACK CN5001)

11. Connect the ground points to the chassis ground. **(See "Ground points.")**

Notes : When diagnosing the AUDIO Assy, the set is able to operate even if removing the V6 COMPOSITE Assy.

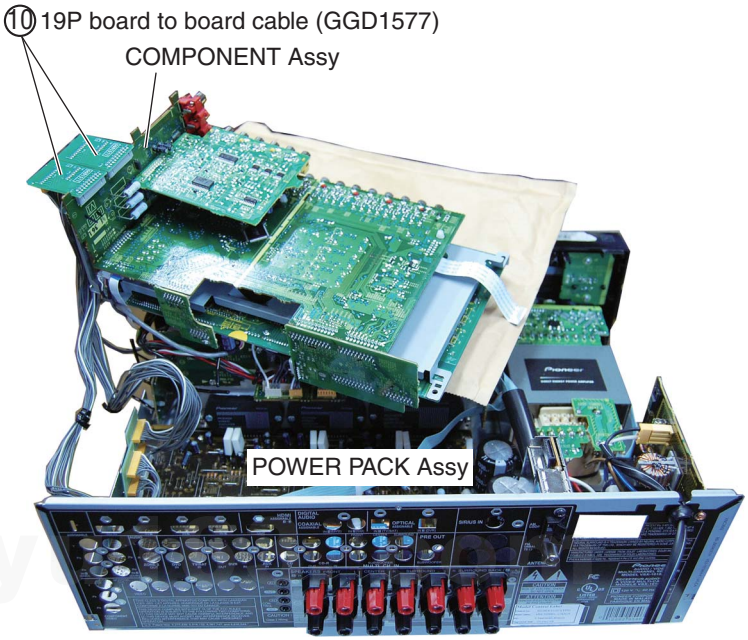

http://www.xiaoyu163.com

http://www.xiaoyu163.com

8. EACH SETTING AND ADJUSTMENT

8.1 HOW TO UPDATE FIRMWARE

■ Version Indication

[Purpose]

The versions for Syscon EMMA, EVENT con and DSP firmware are displayed.

[Preparations]

1. Power on only the Main zone.
2. Set the main volume level to -79.5 dB.

[How to enter]

1. Press “HOME MENU” key of the remote control unit and displays HOME MENU screen.
2. On that above conditions, simultaneously press and hold "ENTER" and " MULTI-zone ON/OFF" keys for more than 10 seconds.

[How to exit]

Simultaneously press and hold "ENTER" and " MULTI-ZONE ON/OFF" keys for short seconds. (The volume level is free.) Or turn off the power.

[Check GUI Display sample]

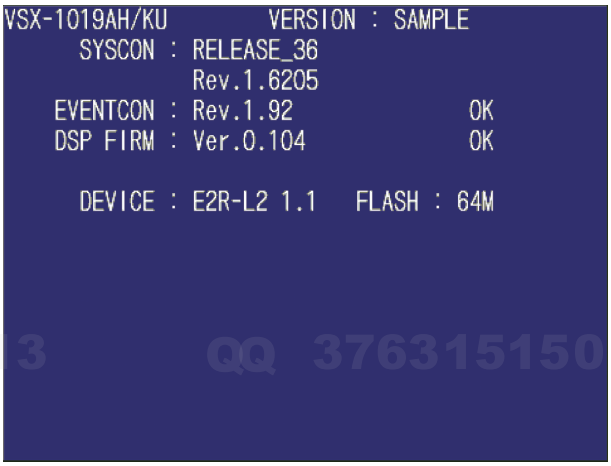

The display design is subject to possible modifications.

■ Syscon (EMMA), EVENT con and DSP Flash ROM Update by USB Memory

● **UPDATE PANEL Mode (Version update)**

[Preparations]

1. Copy the UPDATE FILE to the root directory of the USB Memory.
2. Turn off the power to this unit by setting Multi-Zone to "OFF".
3. Connect the USB Memory to the USB terminal (A type) of the front panel.

[Procedure]

1. While holding down **"TUNE+"** key on the front panel, press **"STANDBY ON/OFF"** key and moves to the **UPDATE PANEL mode**.
2. The updating process is as follows.

● **UPDATE PANEL2 Mode (Version down and same version install)**

[Preparations]

1. Copy the UPDATE FILE to the root directory of the USB Memory.
2. Turn off the power to the unit by **setting the main volume to "---db"** and Multi-zone to OFF.
3. Connect the USB Memory to the USB terminal (A type) of the front panel.

[Procedure]

1. Simultaneously press and hold **"TUNE+"** and **"MULTI-ZONE ON/OFF"** keys for **about 5** seconds and moves to the **UPDATE PANEL2 mode**.
2. The updating process is as follows.

The FL display and procedure of the updating process is same for both mode.

http://www.xiaoyu163.com

http://www.xiaoyu163.com

Key operation	FL display
[CURSOR UP]+ [STANDBY ON/OFF]	POWER ON
Booting is completed.	Whole version is displayed. VERSION 1.000
[CURSOR DOWN] or [CURSOR UP] [↓] [↑]	Update Menu UPDATE

Front Panel Key

[↓] : TUNE-
[↑] : TUNE+
[←] : PRESET-
[→] : PRESET+

If no key is pressed within 10 seconds while booting UPDATE PANEL, the UPDATE PANEL is finished and returns to the normal display. But the process does not become timeout and continues while "FILE searching" or "Updating process".

Key operation	FL display
	Update Menu UPDATE
[ENTER]	
[CURSOR RIGHT] or [CURSOR LEFT]	Update Confirmation UPDATE ? ◀NO▶
[←] [→]	Update Confirmation UPDATE ? ◀YES▶
[ENTER]	File searching PLEASE WAIT
UPDATE FILE searching completed	
	Updating process UPDATE
DSP UPDATE completed	

http://www.xiaoyu163.com

http://www.xiaoyu163.com

Key operation	FL display
DSP UPDATE completed	
	Updating process UPDATE
EMMA UPDATE completed	
	Updating process UPDATE
EVENT UPDATE completed	
	Update completion display COMPLETE
5 Second	
Power turns off automatically. (All ZONE OFF) Disconnect the USB MEMORY.	

The updating time is about 10 minutes.

[Confirmation]

1. Check the updated version.
   Following the procedures described in "Version Indication" in this section, check that the version has been changed to a new one.

http://www.xiaoyu163.com

http://www.xiaoyu163.com

9. EXPLODED VIEWS AND PARTS LIST

NOTES:
- *Parts marked by "NSP" are generally unavailable because they are not in our Master Spare Parts List.*
- *The ⚠ mark found on some component parts indicates the importance of the safety factor of the part. Therefore, when replacing, be sure to use parts of identical designation.*
- *Screws adjacent to ▼ mark on product are used for disassembly.*
- *For the applying amount of lubricants or glue, follow the instructions in this manual. (In the case of no amount instructions, apply as you think it appropriate.)*

9.1 PACKING SECTION

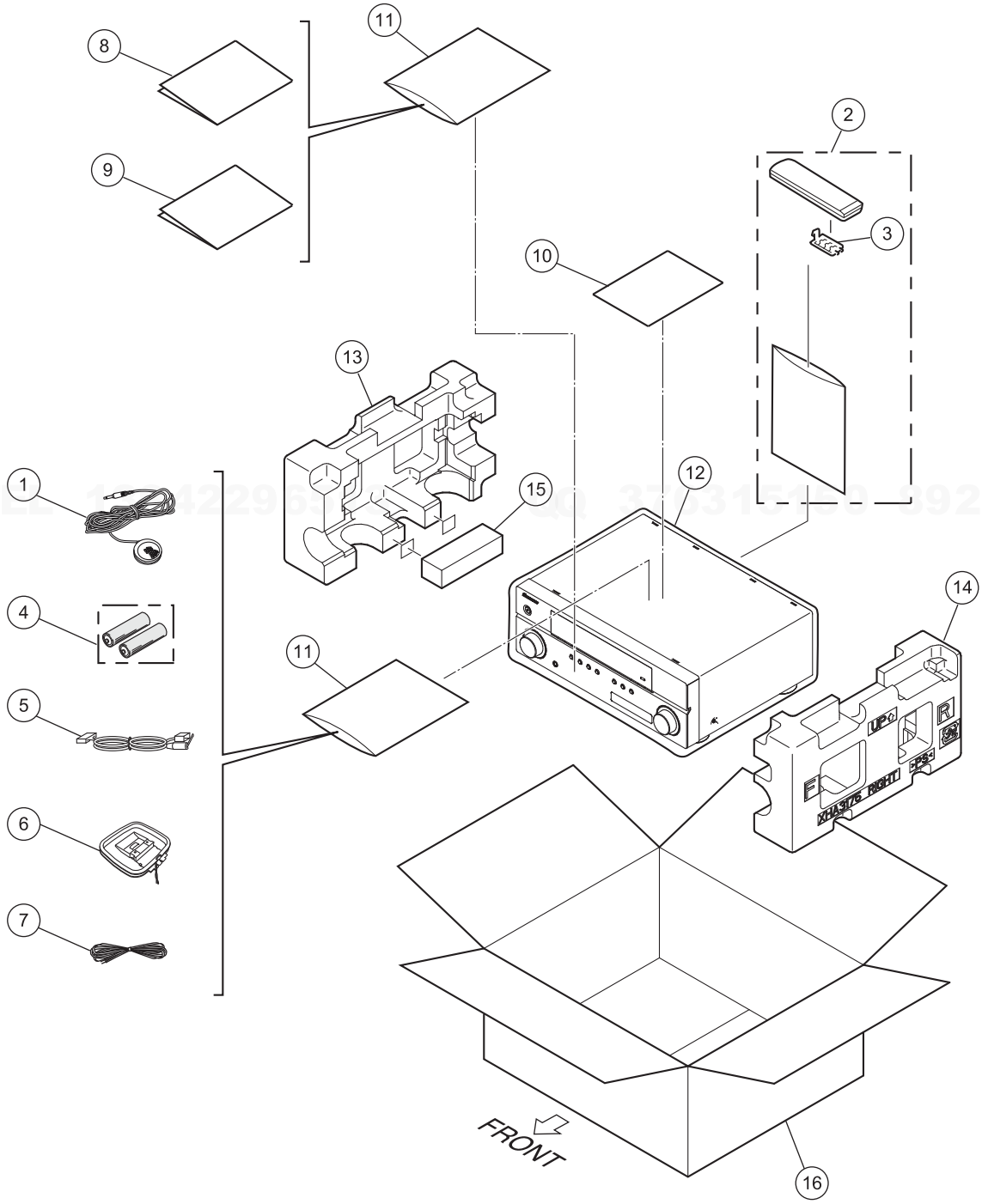

http://www.xiaoyu163.com

http://www.xiaoyu163.com

(1) PACKING SECTION PARTS LIST

Mark	No.	Description	Part No.
	1	MCACC Setup Microphone	APM7008
	2	Remote Control Unit	See Contrast table (2)
	3	Battery Cover	VZN1025
NSP	4	Dry Cell Battery (AA, R6)	XEX3005
	5	iPod Cable	ADE7129
	6	AM Loop Antenna	ATB7013
	7	FM Wire Antenna	ADH7030
	8	Operating Instructions (En)	XRB3109
	9	Operating Instructions (Es)	XRC3418
	10	Caution Sheet SP, E	ARM7083
NSP	11	Polyethylene Bag (0.06 x 230 x 340)	AHG7117
	12	Packing Sheet	RHC1023
	13	Left Pad V5	XHA3174
	14	Right Pad V5	XHA3175
	15	Sub Pad	XHA3179
	16	Packing Case V6S Low	See Contrast table (2)

(2) CONTRAST TABLE

VSX-1019AH-K/UXJCA and VSX-919AH-K/CUXJCA are constructed the same except for the following:

Mark	No.	Symbol and Description	VSX-1019AH-K /UXJCA	VSX-919AH-K /CUXJCA
	2	Remote Control Unit	AXD7551	AXD7552
	16	Packing Case V6S Low	XHD3886	XHD3887

http://www.xiaoyu163.com

http://www.xiaoyu163.com

9.2 EXTERIOR SECTION

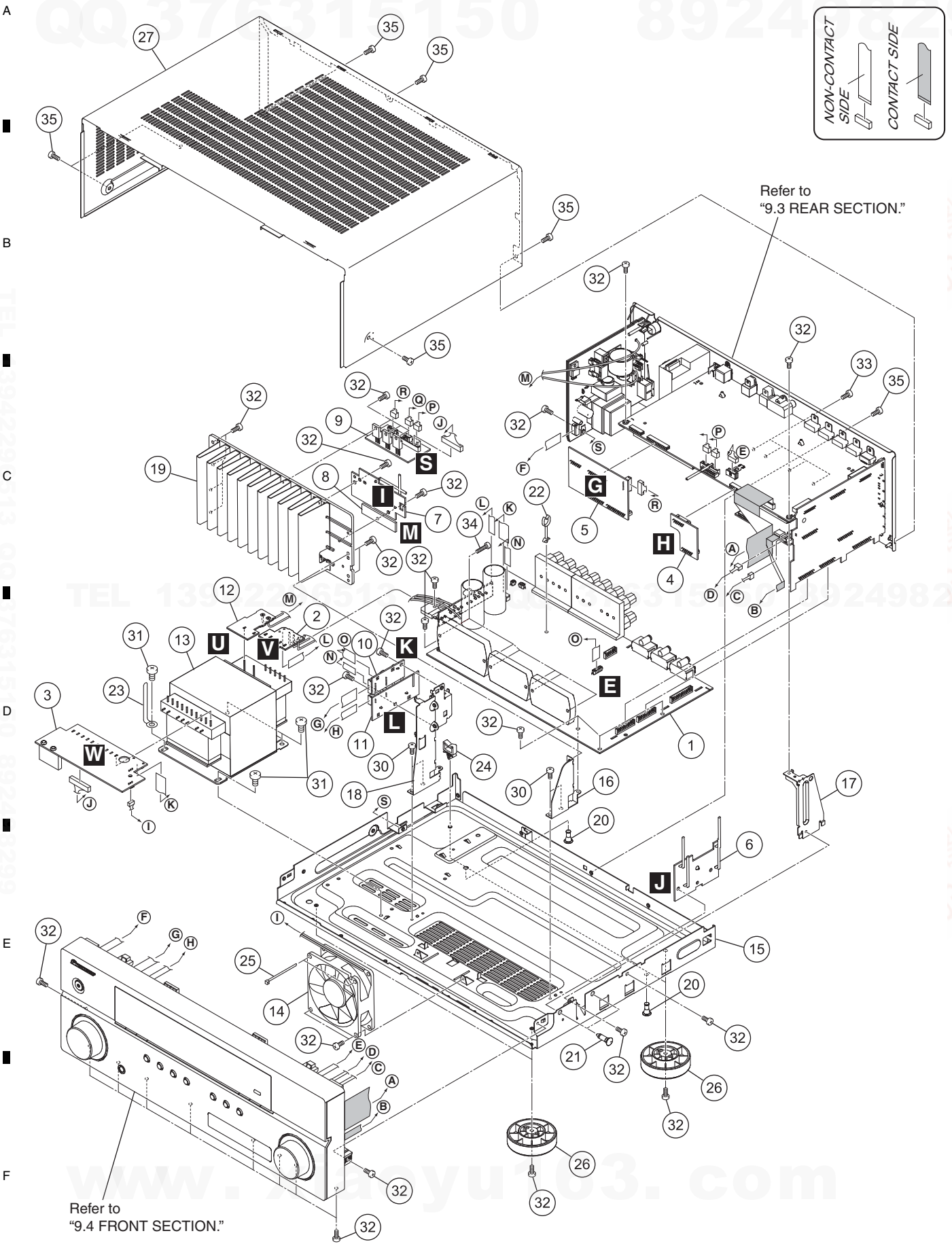

http://www.xiaoyu163.com

http://www.xiaoyu163.com

EXTERIOR SECTION PARTS LIST

Mark	No.	Description	Part No.
	1	POWER PACK Assy	AWX9337
	2	TRANS 2 Assy	AWX9343
	3	TRANS 3 Assy	AWX9344
	4	BRIDGE 1 Assy	AWX9348
	5	BRIDGE 2 Assy	AWX9349
	6	BIND 2 Assy	AWX9413
	7	BIND 1 Assy	AWX9412
	8	BIND 5 Assy	AWX9515
	9	REGULATOR Assy	AWX9341
	10	BIND 3 Assy	AWX9424
	11	BIND 4 Assy	AWX9428
	12	V6 TRANS 1 Assy	XWZ4392
⚠	13	Transformer (T1501)	XTS3117
⚠	14	DC FAN Motor	XXM3012
NSP	15	Chassis V6 Select L	XNA3084
	16	H/S Angle V3	XNG3145
	17	EMMA GRD PLT (Right)	XNG3194
	18	EMMA GRD PLT (Left)	XNG3201
NSP	19	Power Pack HS V6S L	XNH3053
	20	PCB Holder	AEC7057
	21	Locking Card Spacer	AEC7372
	22	Harness Lifter	AEC7583
	23	Cord Clamper	RNH1005
	24	Wire Saddle	XEC3100
NSP	25	Binder (BK-1)	ZCA-BK1
	26	Insulator	PNW2766
	27	Bonnet V6S LOW	XZN3206
	28	• • • • •	
	29	• • • • •	
	30	Screw	ABA1396
	31	Screw 4 X 8 (FE)	ABA7103
	32	Screw	BBZ30P080FNI
	33	Screw	BBT30P100FTB
	34	Screw	BBZ30P140FTC
	35	Screw	BBZ30P080FTB

http://www.xiaoyu163.com

http://www.xiaoyu163.com

9.3 REAR SECTION

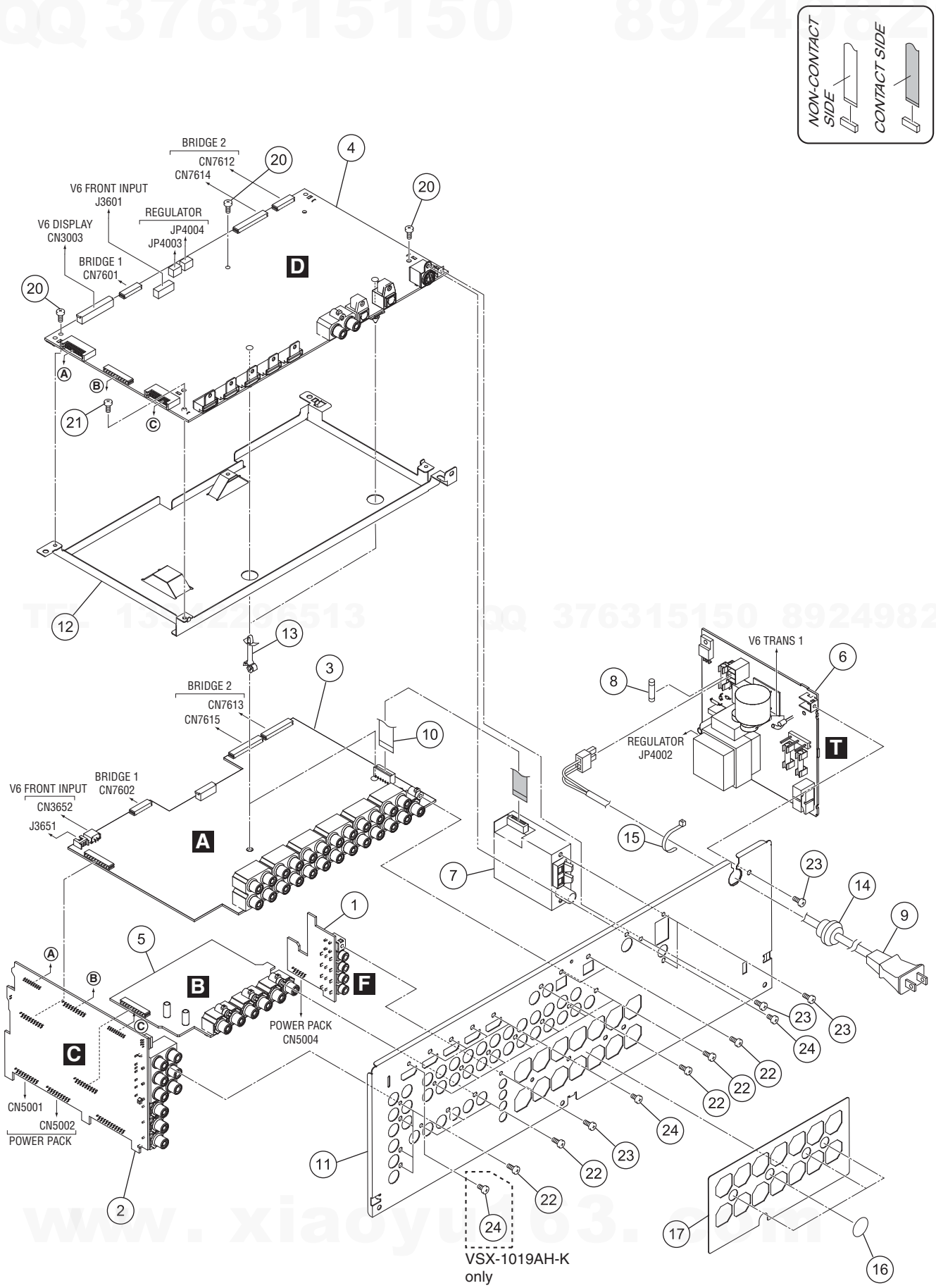

http://www.xiaoyu163.com

http://www.xiaoyu163.com

(1) REAR SECTION PARTS LIST

Mark	No.	Description	Part No.
	1	IR/SR Assy	AWX9342
	2	COMPONENT Assy	AWX9350
	3	AUDIO Assy	AWX9352
	4	DIGITAL MAIN Assy	See Contrast table (2)
	5	V6 COMPOSITE Assy	See Contrast table (2)
	6	V6 PRIMARY Assy	XWZ4387
	7	FM/AM TUNER Unit	AXX7250
⚠	8	Fuse (FU1: 10 A)	REK1154
⚠	9	AC Power Cord	ADG7024
	10	11P FFC/30V	XDD3300
	11	Rear Panel V6S Low	See Contrast table (2)
	12	EMMA Shield V6S	XNG3196
NSP	13	PCB Support	AEC7513
	14	Cord Stopper	CM-22C
NSP	15	Binder (BK-1)	ZCA-BK1
	16	Cushion Circle 14B	AED7081
	17	Rear PNL PC SHT V6SL	XEC3105
	18	• • • • •	
	19	• • • • •	
	20	Screw	BBZ30P080FNI
	21	Screw	BMZ26P040FTC
	22	Screw	BPZ30P080FTB
	23	Screw	BBZ30P080FTB
	24	Screw	BMZ30P040FTB

(2) CONTRAST TABLE

VSX-1019AH-K/UXJCA and VSX-919AH-K/CUXJCA are constructed the same except for the following:

Mark	No.	Symbol and Description	VSX-1019AH-K /UXJCA	VSX-919AH-K /CUXJCA
	4	DIGITAL MAIN Assy	AWX9427	AWX9426
	5	COMPOSITE Assy	XWZ4386	XWZ4393
	11	Rear Panel V6S Low	XNC3642	XNC3643

http://www.xiaoyu163.com

http://www.xiaoyu163.com

9.4 FRONT SECTION

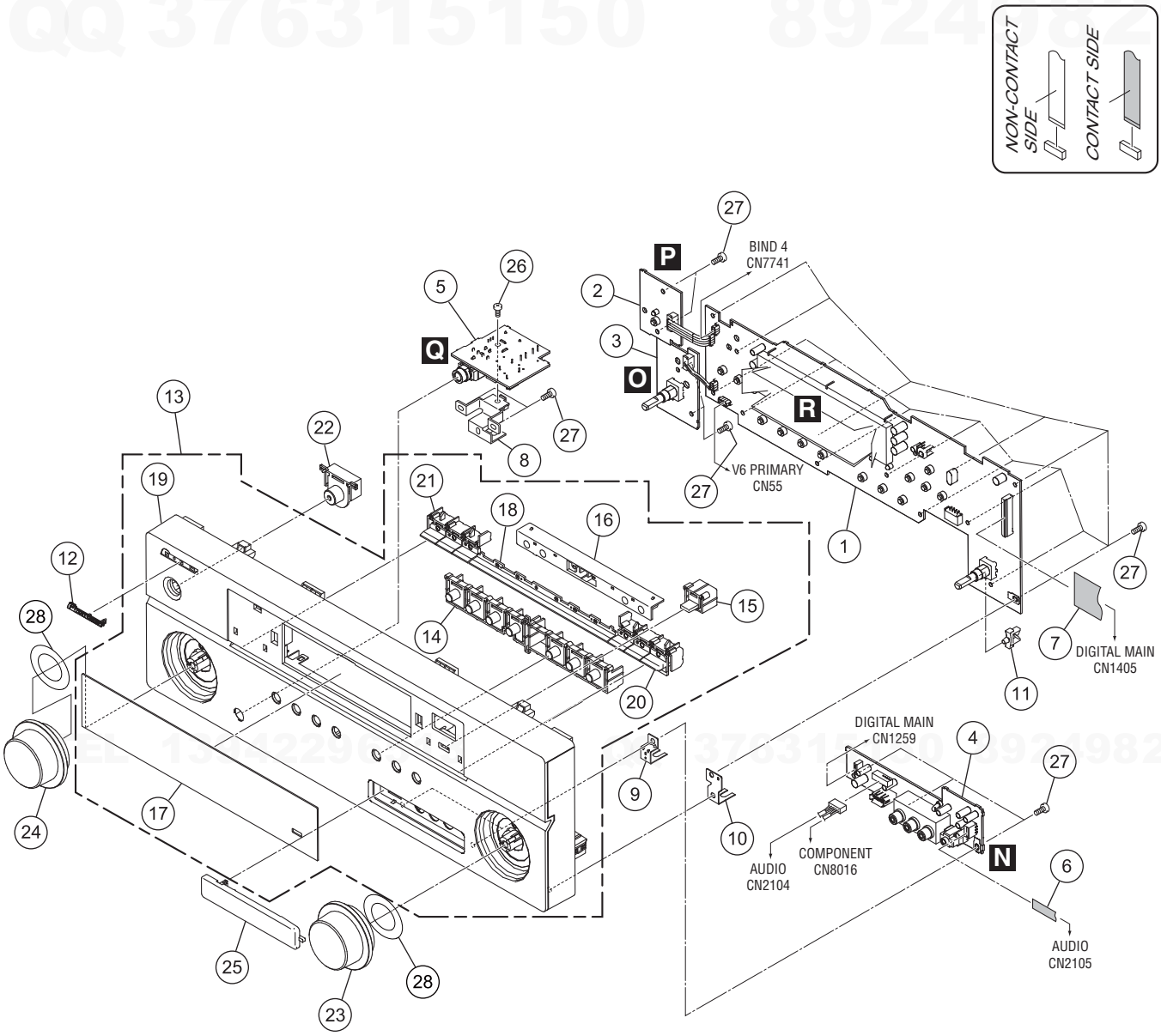

www.xiaoyu163.com

http://www.xiaoyu163.com

http://www.xiaoyu163.com

(1) FRONT SECTION PARTS LIST

Mark	No.	Description	Part No.
	1	V6 DISPLAY Assy	See Contrast table (2)
	2	V6 POWER SW Assy	XWZ4383
	3	V6 JOG Assy	XWZ4384
	4	V6 FRONT INPUT Assy	XWZ4385
	5	V6 H.P Assy	XWZ4391
	6	5P FFC/60V	XDD3299
	7	31P FFC/60V	XDD3301
	8	Headphone GRD PLT	XNG3197
	9	Video Input GRD PLT	XNG3199
	10	JOG GRD PLT V6S Low	XNG3202
	11	Wire Saddle	XEC3100
	12	Pioneer Name Plate	VAM1153
NSP	13	F/P Assy V6S Low	See Contrast table (2)
	14	Circle Button V6S L	XAD3270
	15	ENTER Button V6S	XAD3271
	16	LED Cover V6S Low	XAD3280
	17	Display Panel V6S L	XAK3640
	18	Center Lens V6S	XAK3648
	19	Front Panel V6S Low	See Contrast table (2)
	20	CTR BTN Right Assy	XXG3415
	21	CTR BTN Left Assy	XXG3416
	22	STANDBY BTN Assy V6S	XXG3413
	23	VOL Knob V4K	XAB3053
	24	VOL Knob V5K	XAB3058
	25	Input Cover V6S	XAK3642
	26	Screw	BBZ30P080FNI
	27	Screw	BPZ26P080FTC
	28	Knob Spacer	AEC7558

(2) CONTRAST TABLE

VSX-1019AH-K/UXJCA and VSX-919AH-K/CUXJCA are constructed the same except for the following:

Mark	No.	Symbol and Description	VSX-1019AH-K /UXJCA	VSX-919AH-K /CUXJCA
	1	V6 DISPLAY Assy	XWZ4374	XWZ4375
NSP	13	F/P Assy V6S Low	XXG3405	XXG3406
	19	Front Panel V6S Low	XMB3351	XMB3350

http://www.xiaoyu163.com

http://www.xiaoyu163.com

10. SCHEMATIC DIAGRAM

10.1 AUDIO ASSY

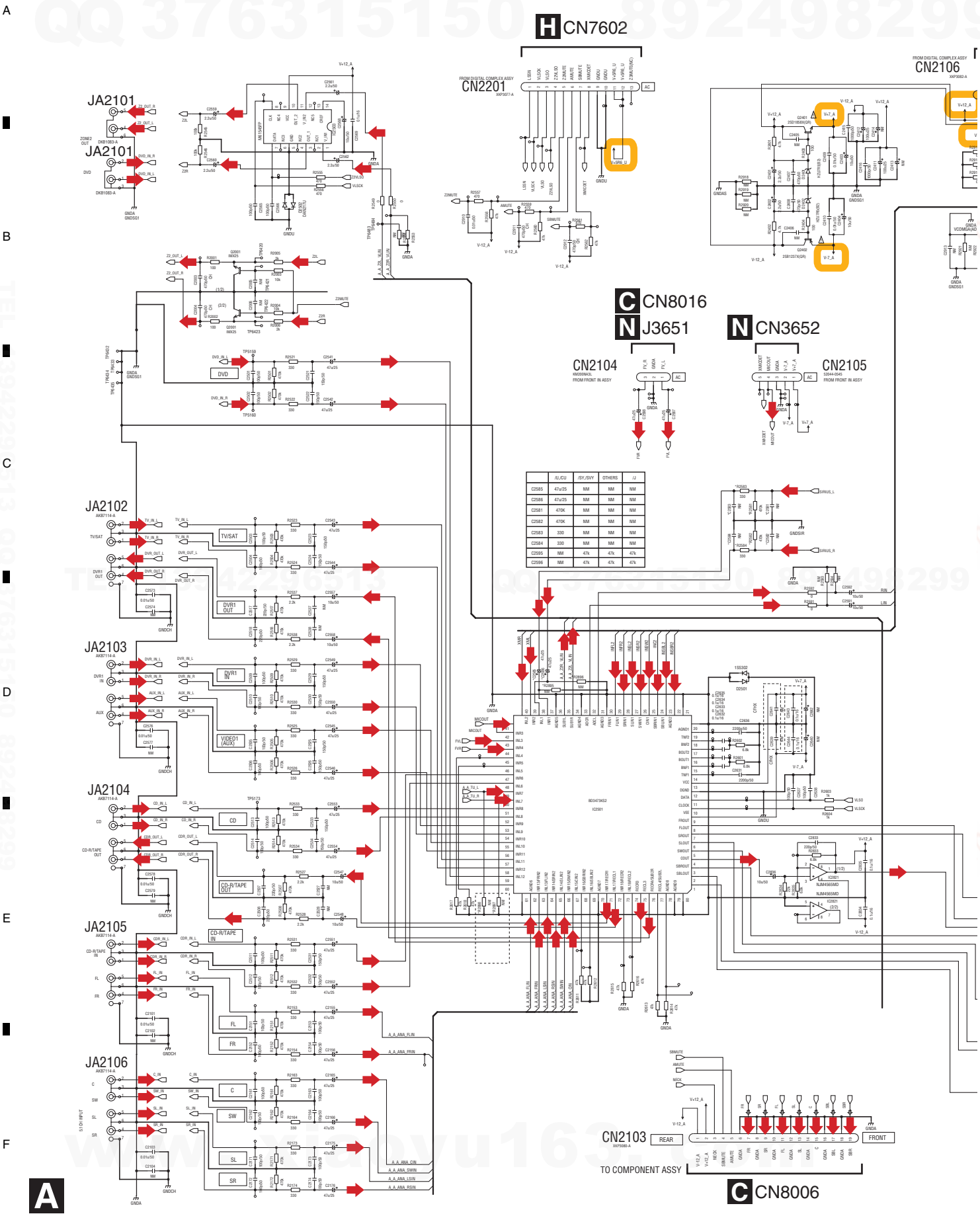

	/U,/CU	/SY,/SVY	OTHERS	/J
C2585	47u/25	NM	NM	NM
C2586	47u/25	NM	NM	NM
C2581	470K	NM	NM	NM
C2582	470K	NM	NM	NM
C2583	330	NM	NM	NM
C2584	330	NM	NM	NM
C2595	NM	47k	47k	47k
C2596	NM	47k	47k	47k

http://www.xiaoyu163.com

http://www.xiaoyu163.com

A AUDIO ASSY (AWX9352)

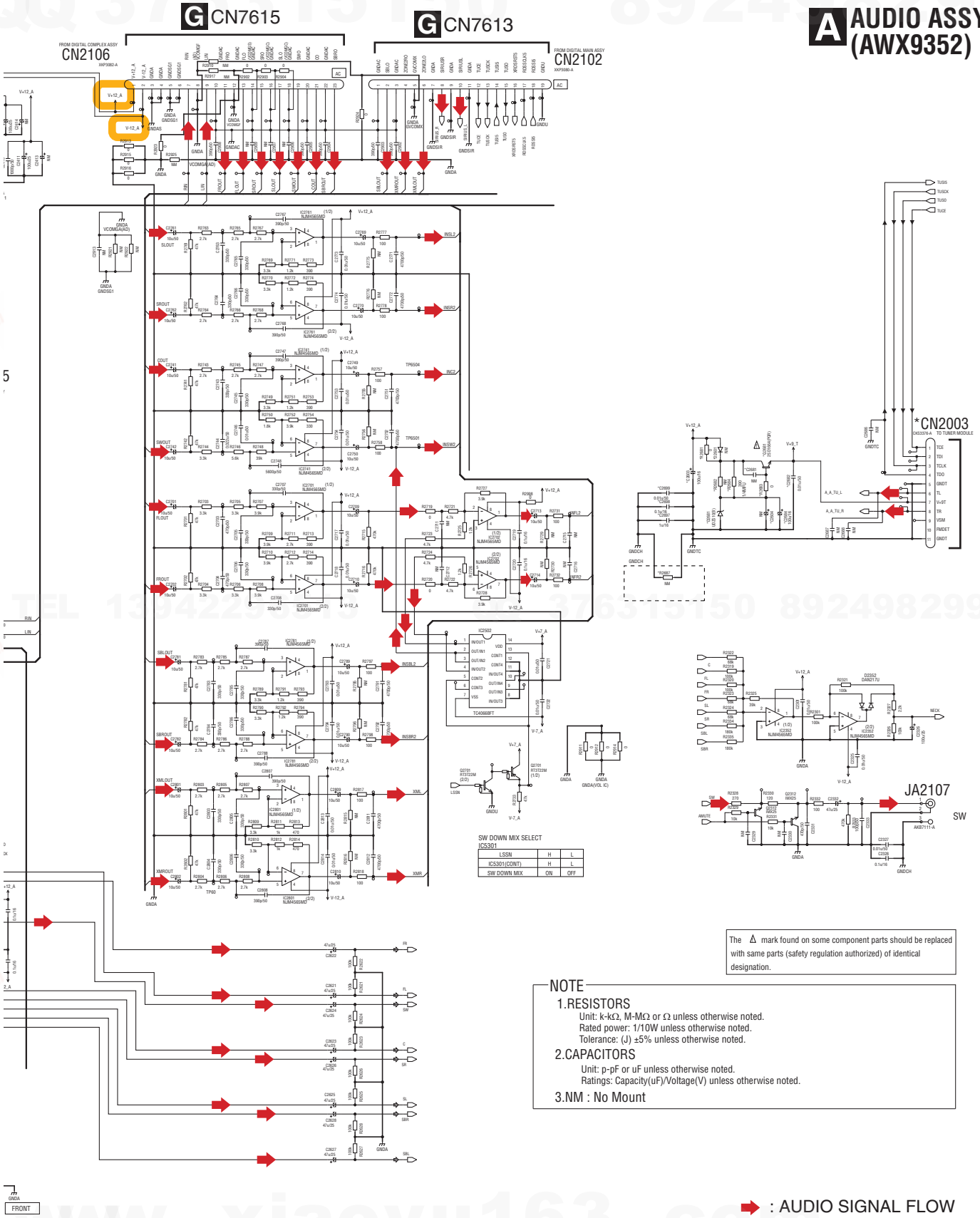

SW DOWN MIX SELECT
IC5301

LSSN	H	L
IC5301(CONT)	H	L
SW DOWN MIX	ON	OFF

The ⚠ mark found on some component parts should be replaced with same parts (safety regulation authorized) of identical designation.

NOTE

1.RESISTORS
Unit: k-kΩ, M-MΩ or Ω unless otherwise noted.
Rated power: 1/10W unless otherwise noted.
Tolerance: (J) ±5% unless otherwise noted.

2.CAPACITORS
Unit: p-pF or uF unless otherwise noted.
Ratings: Capacity(uF)/Voltage(V) unless otherwise noted.

3.NM : No Mount

: AUDIO SIGNAL FLOW

http://www.xiaoyu163.com

http://www.xiaoyu163.com

10.2 V6 COMPOSITE ASSY

B V6 COMPOSITE ASSY (VSX-1019AH : XWZ4386) (VSX-919AH : XWZ4393)

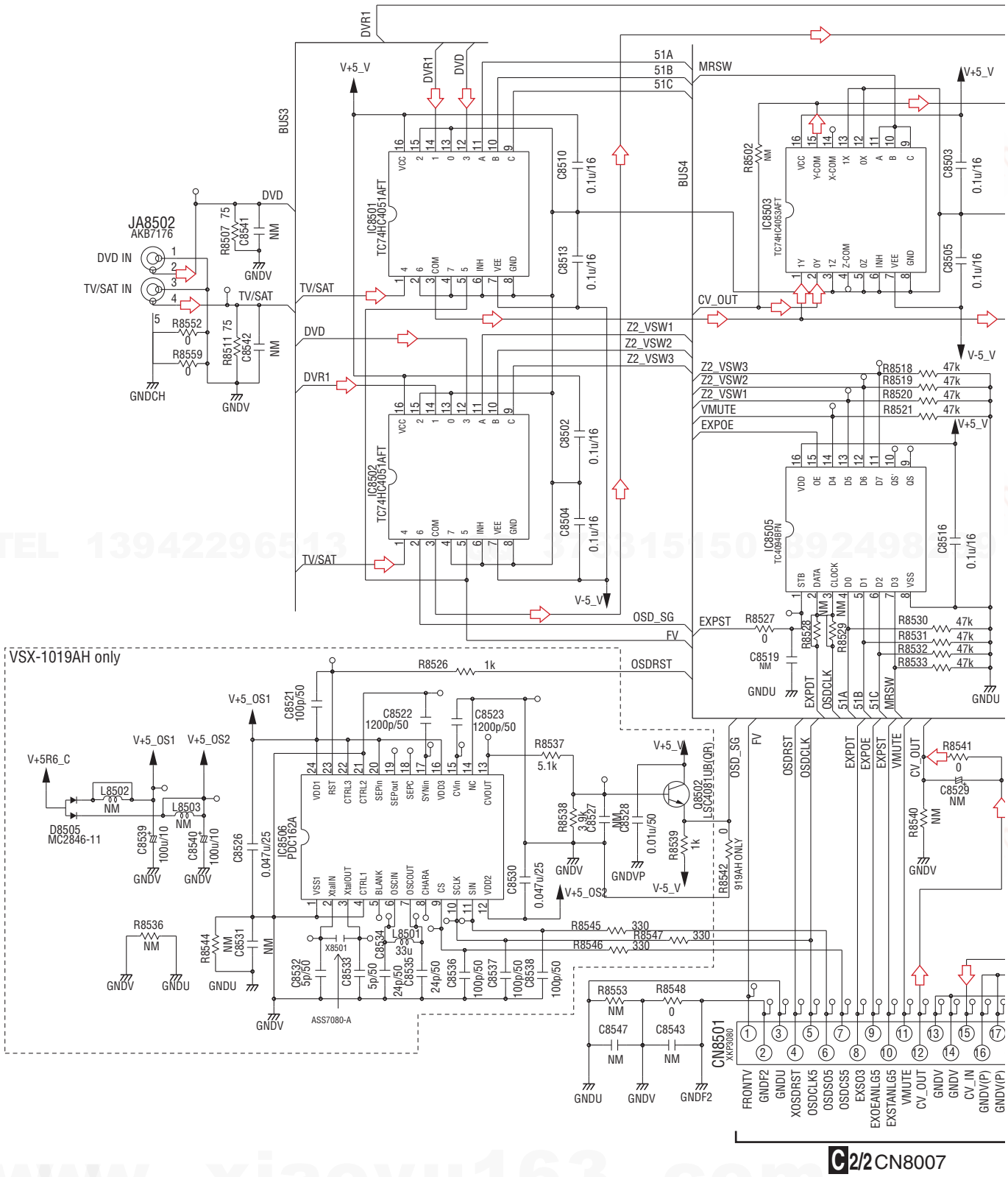

www.xiaoyu163.com

http://www.xiaoyu163.com

http://www.xiaoyu163.com

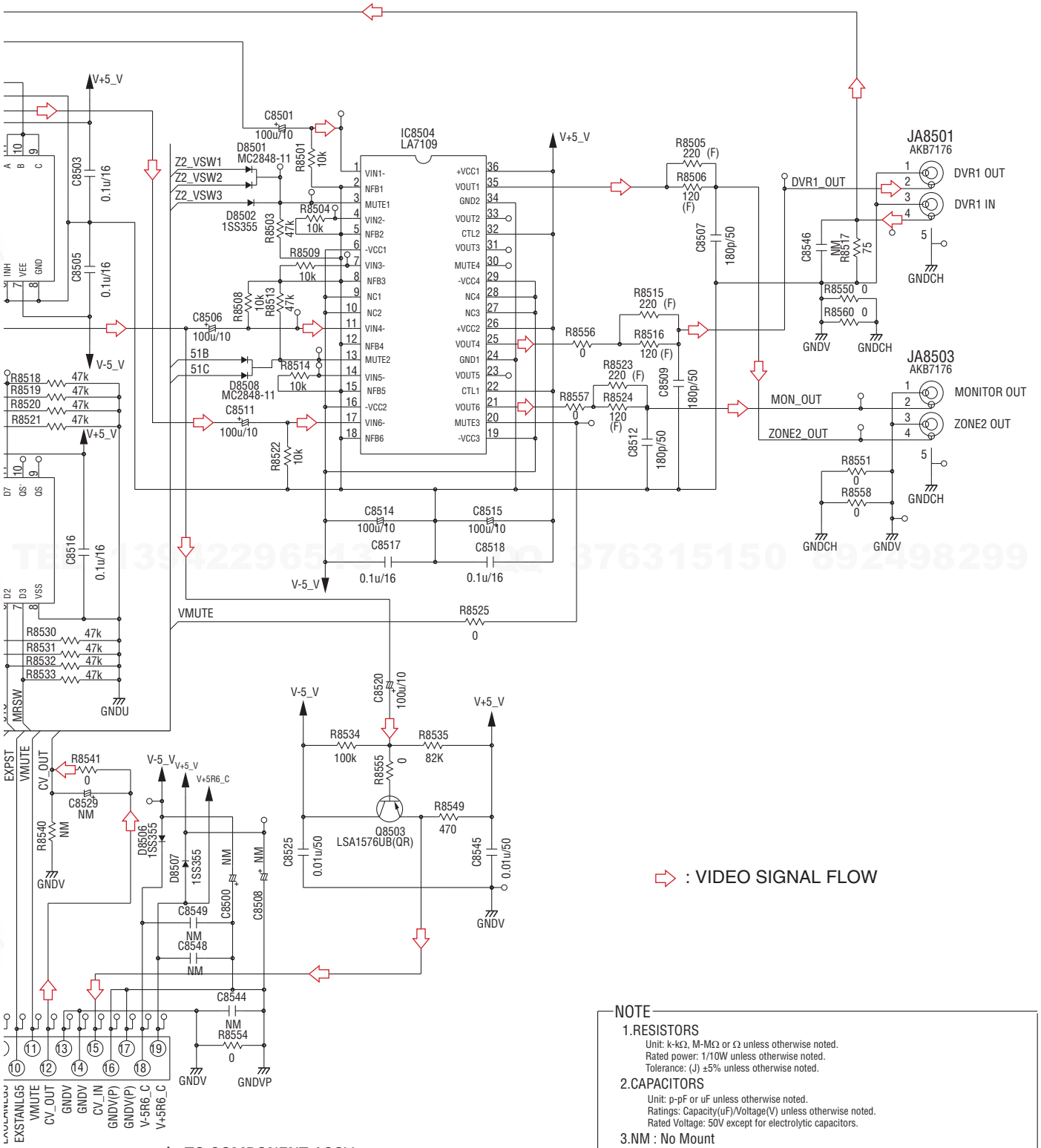

NOTE

1.RESISTORS
Unit: k-kΩ, M-MΩ or Ω unless otherwise noted.
Rated power: 1/10W unless otherwise noted.
Tolerance: (J) ±5% unless otherwise noted.

2.CAPACITORS
Unit: p-pF or uF unless otherwise noted.
Ratings: Capacity(uF)/Voltage(V) unless otherwise noted.
Rated Voltage: 50V except for electrolytic capacitors.

3.NM : No Mount

http://www.xiaoyu163.com

http://www.xiaoyu163.com

10.3 COMPONENT ASSY (1/2)

	except /J model
	awx9350
R8021	75
R8022	75
R8023	75
R8031	75
R8032	75
R8033	75

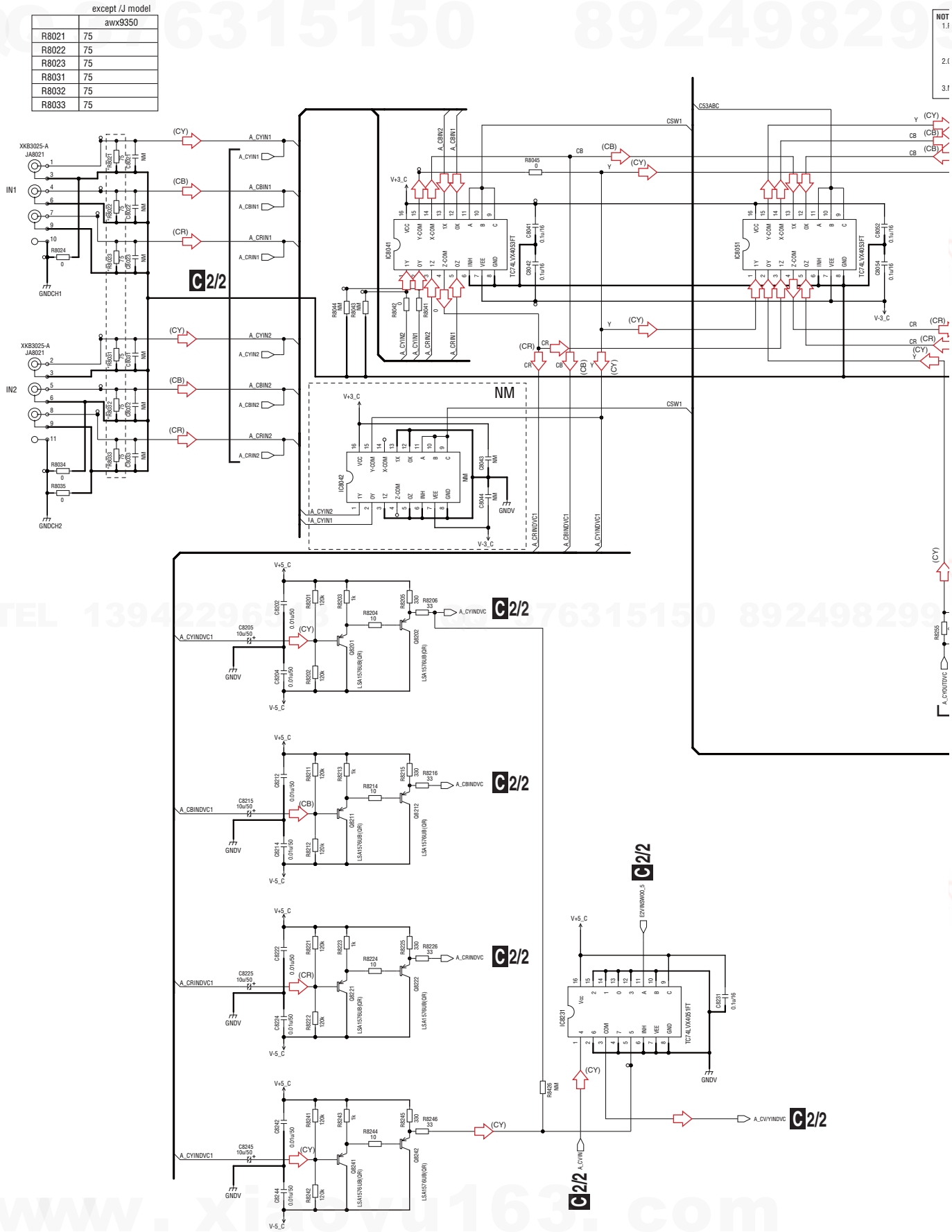

http://www.xiaoyu163.com

http://www.xiaoyu163.com

C 1/2 COMPONENT ASSY (AWX9350)

NOTE
1.RESISTORS
Unit: k-kΩ, M-MΩ or Ω unless otherwise noted.
Rated power: 1/10W unless otherwise noted.
Tolerance: (J)±5% unless otherwise noted.
2.CAPACITORS
Unit: p-pF, or μF unless otherwise noted.
Ratings: Capacity(μF)/Voltage(V) unless otherwise noted.
3.NM : No Mount

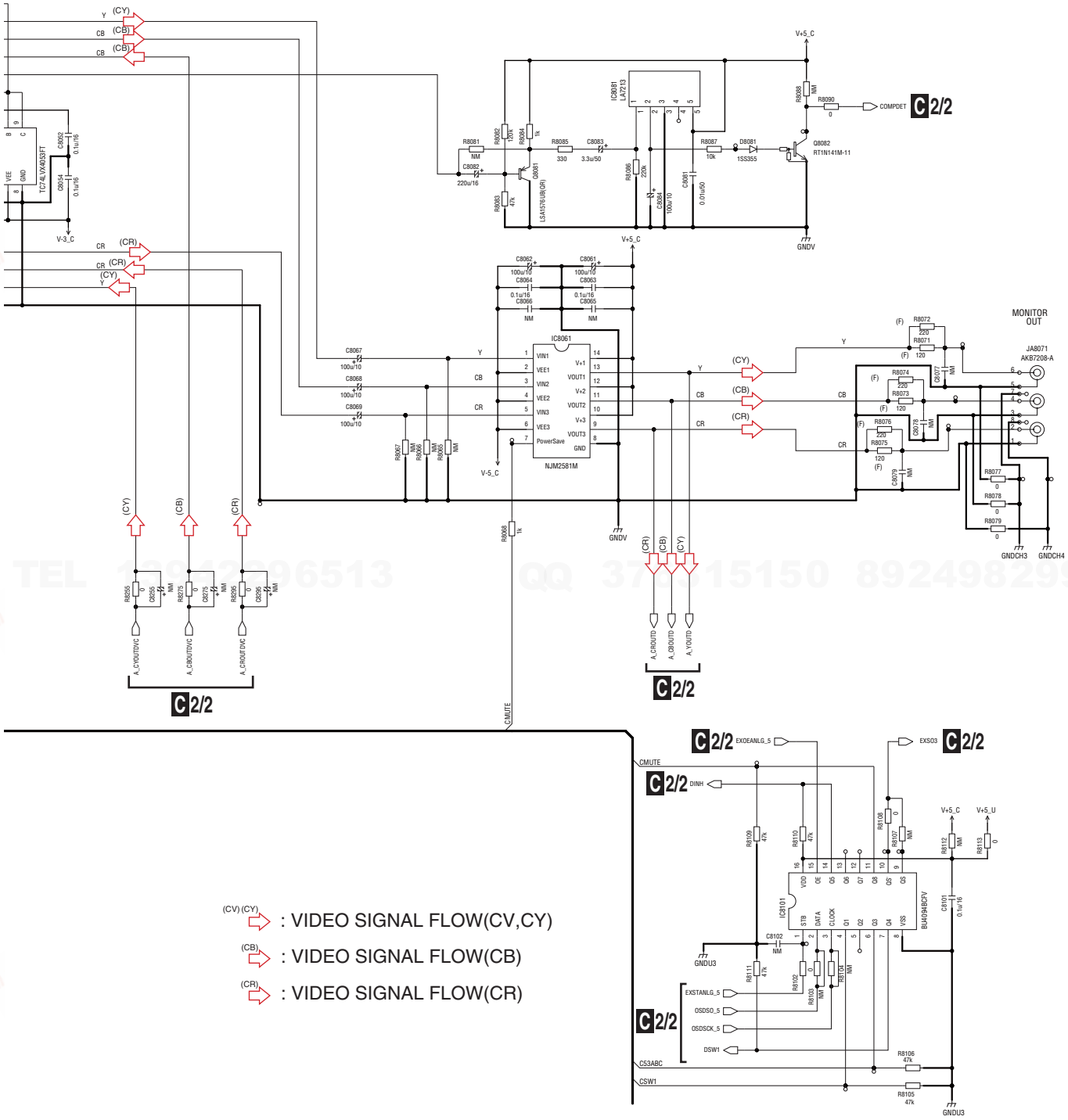

http://www.xiaoyu163.com

http://www.xiaoyu163.com

10.4 COMPONENT ASSY (2/2)

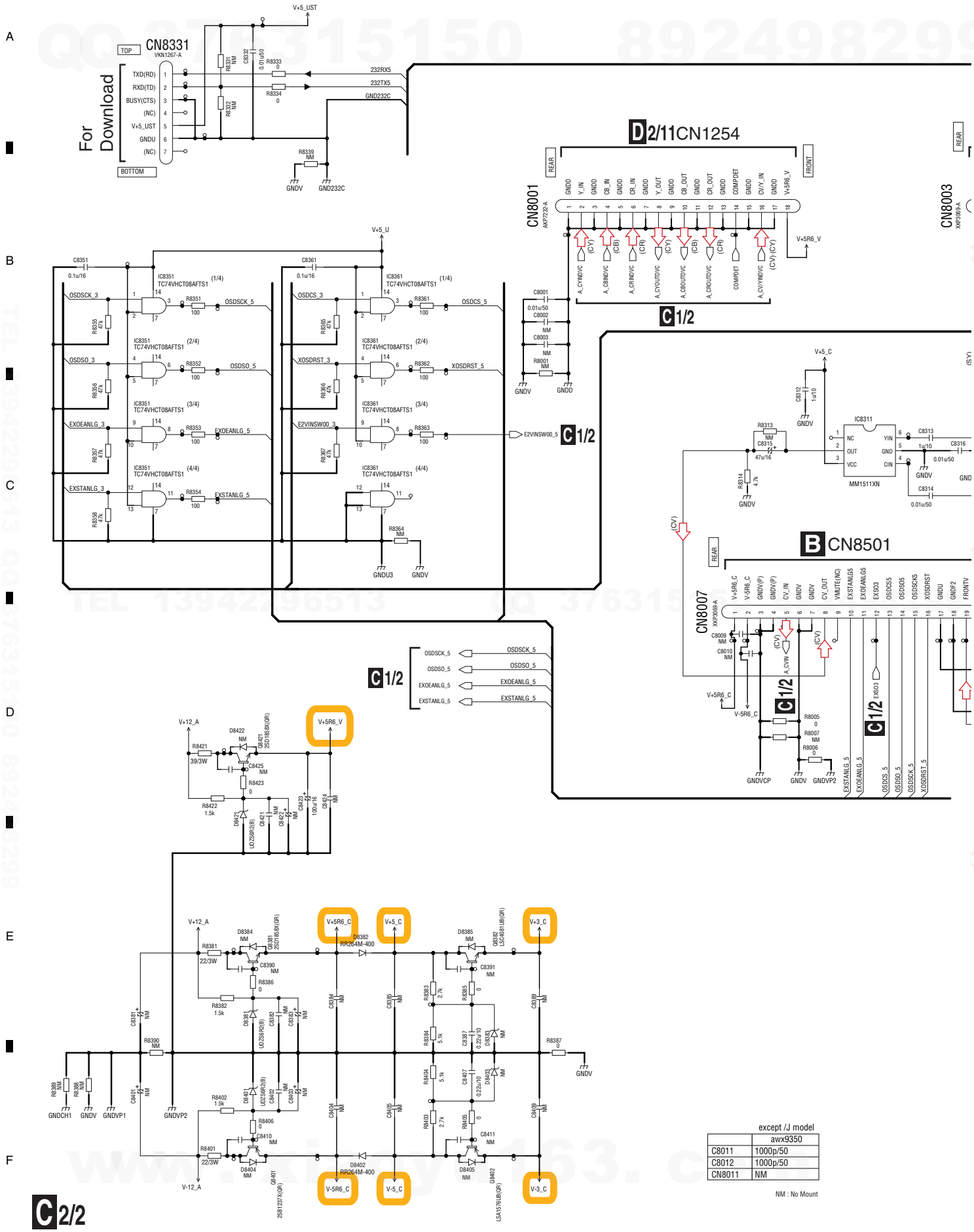

	except /J model
	awx9350
C8011	1000p/50
C8012	1000p/50
CN8011	NM

NM : No Mount

http://www.xiaoyu163.com

http://www.xiaoyu163.com

C 2/2 COMPONENT ASSY (AWX9350)

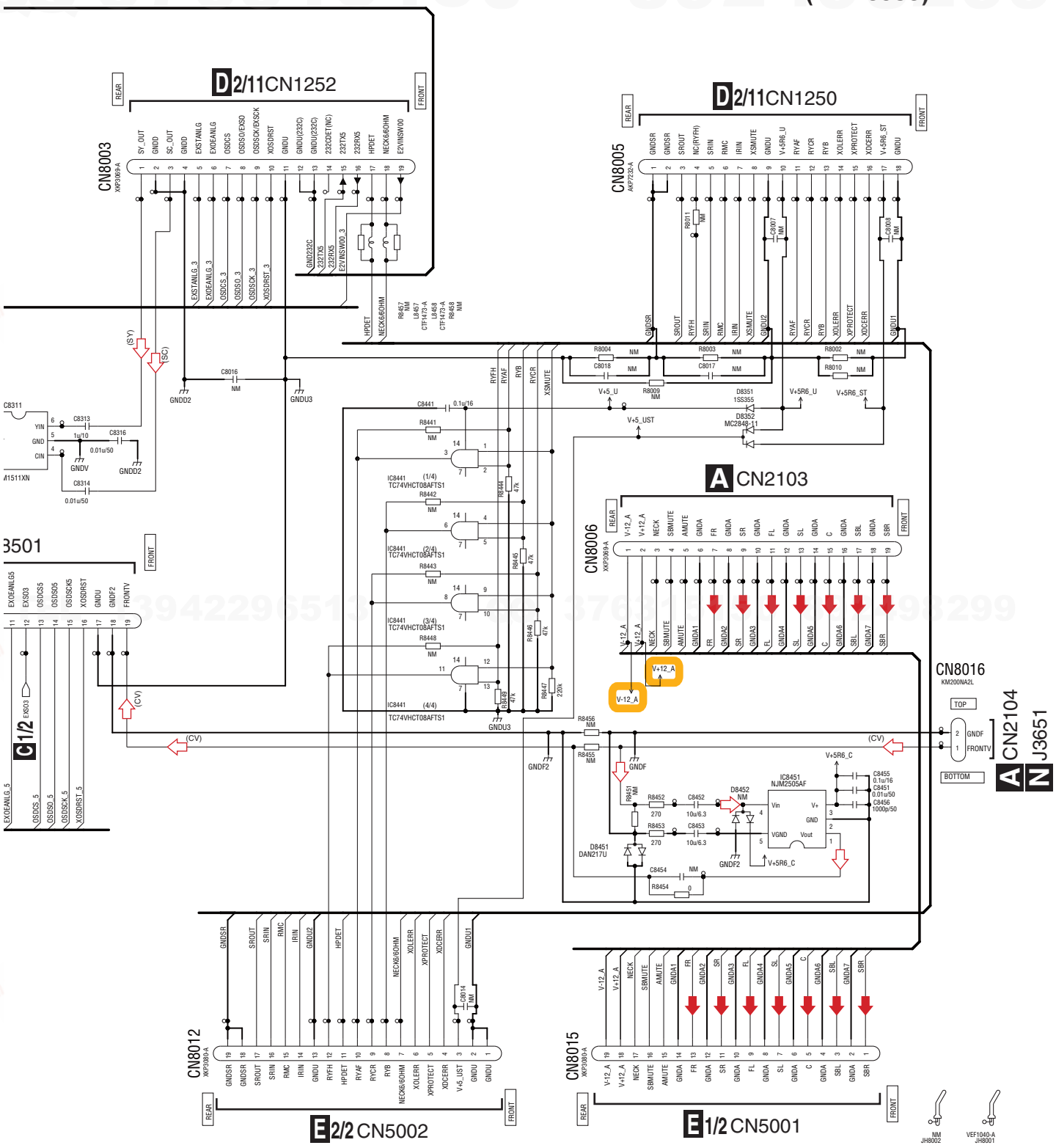

(CY)(CV) : VIDEO SIGNAL FLOW(CY,CV)
(CB) : VIDEO SIGNAL FLOW(CB)
(CR) : VIDEO SIGNAL FLOW(CR)
(SY) : VIDEO SIGNAL FLOW(SY)
(SC) : VIDEO SIGNAL FLOW(SC)
: VIDEO SIGNAL FLOW

C 2/2

http://www.xiaoyu163.com

http://www.xiaoyu163.com

10.5 DIGITAL MAIN ASSY (1/11) GUIDE PAGE

Note: When ordering service parts, be sure to refer to " EXPLODED VIEWS AND PARTS LIST" or "ELECTRICAL PARTS LIST".

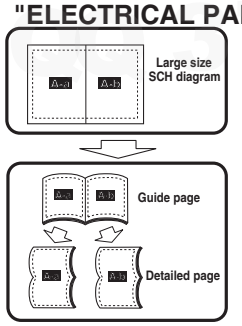

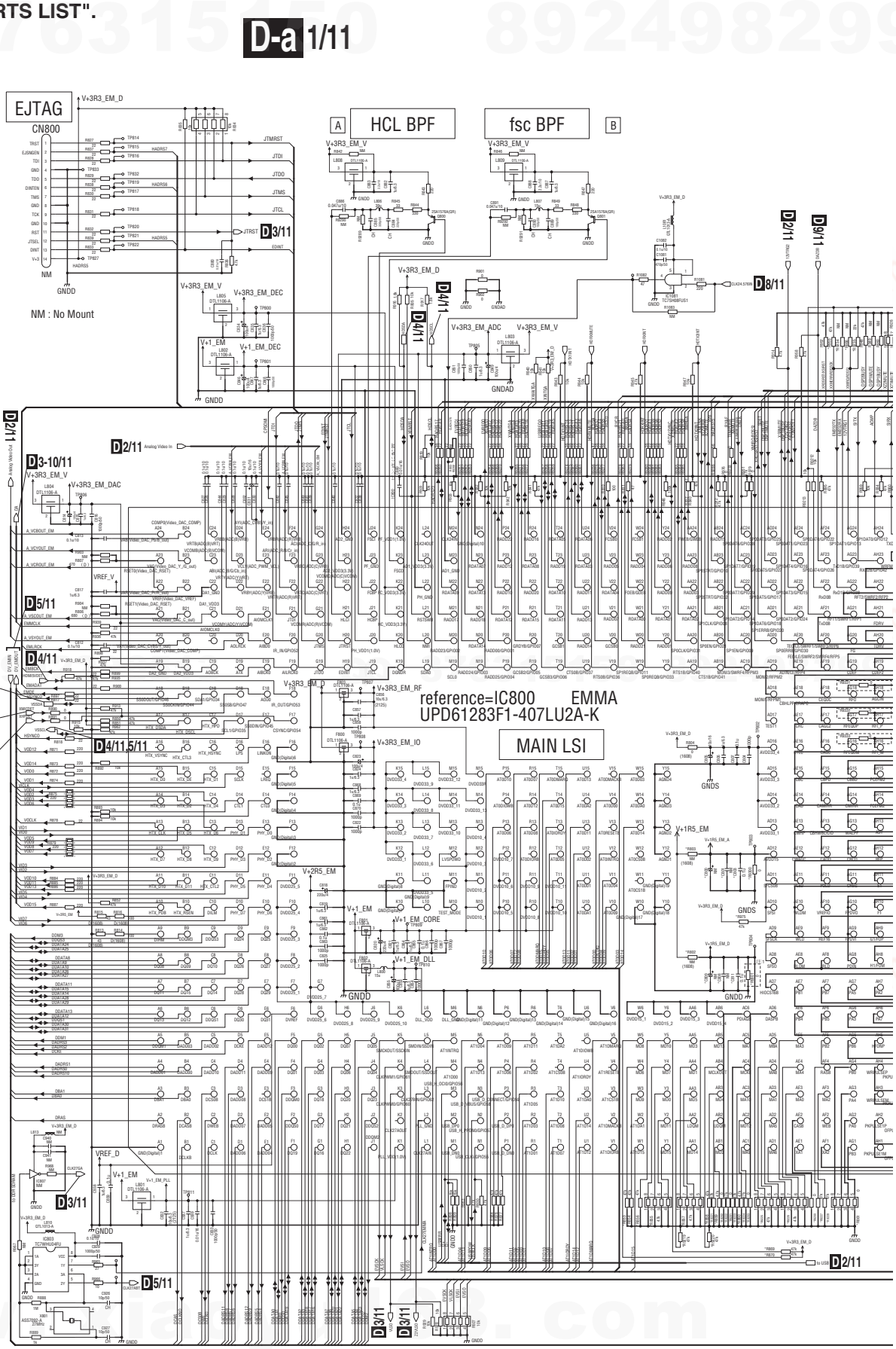

http://www.xiaoyu163.com

http://www.xiaoyu163.com

D 1/11 DIGITAL MAIN ASSY (VSX-1019AH: AWX9427) (VSX-919AH: AWX9426)

D-b 1/11

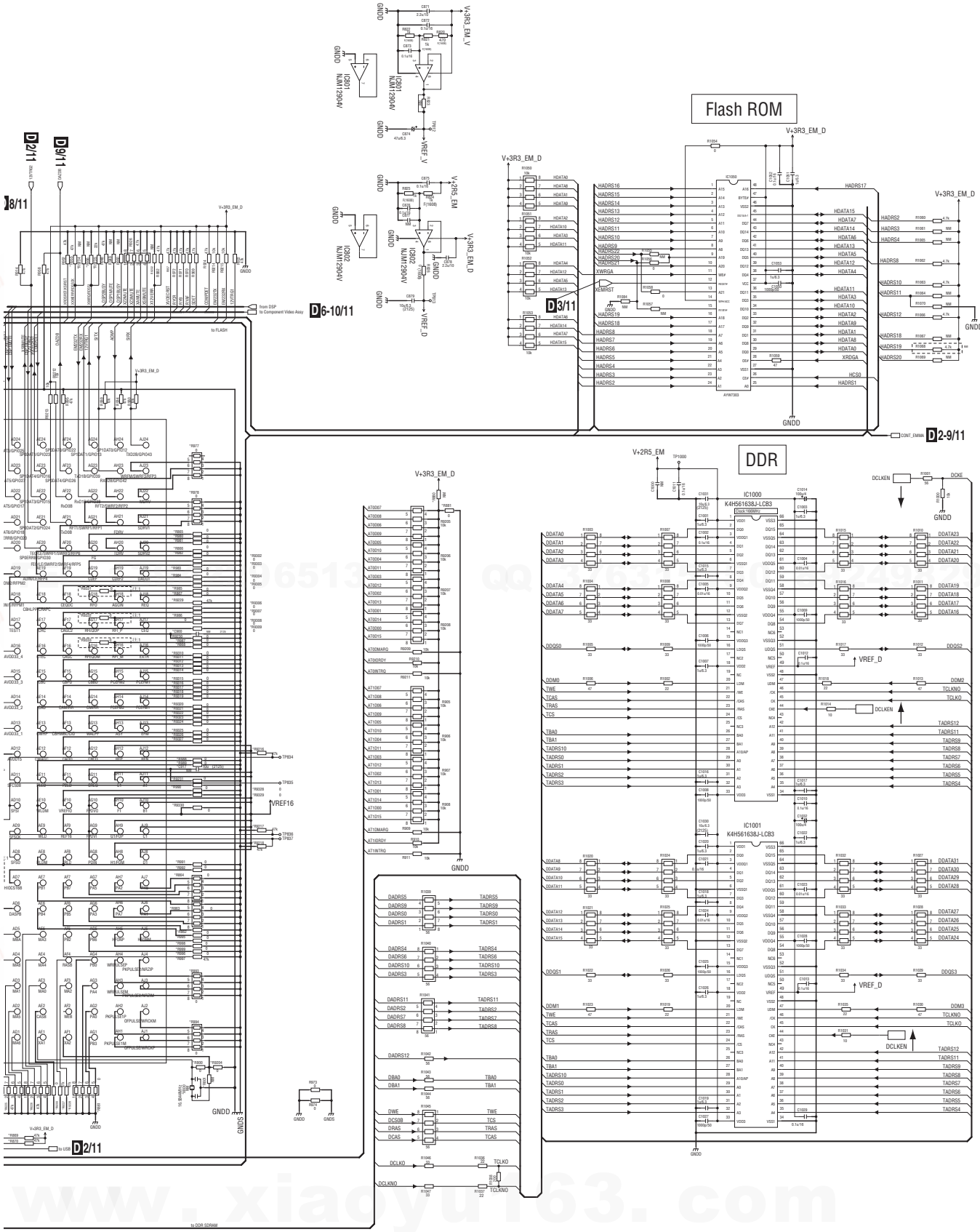

http://www.xiaoyu163.com

D 1/11 DIGITAL MAIN ASSY (VSX-1019AH: AWX9427) (VSX-919AH: AWX9426)

A-a A-b

D-b 1/11

VSX-1019AH-K

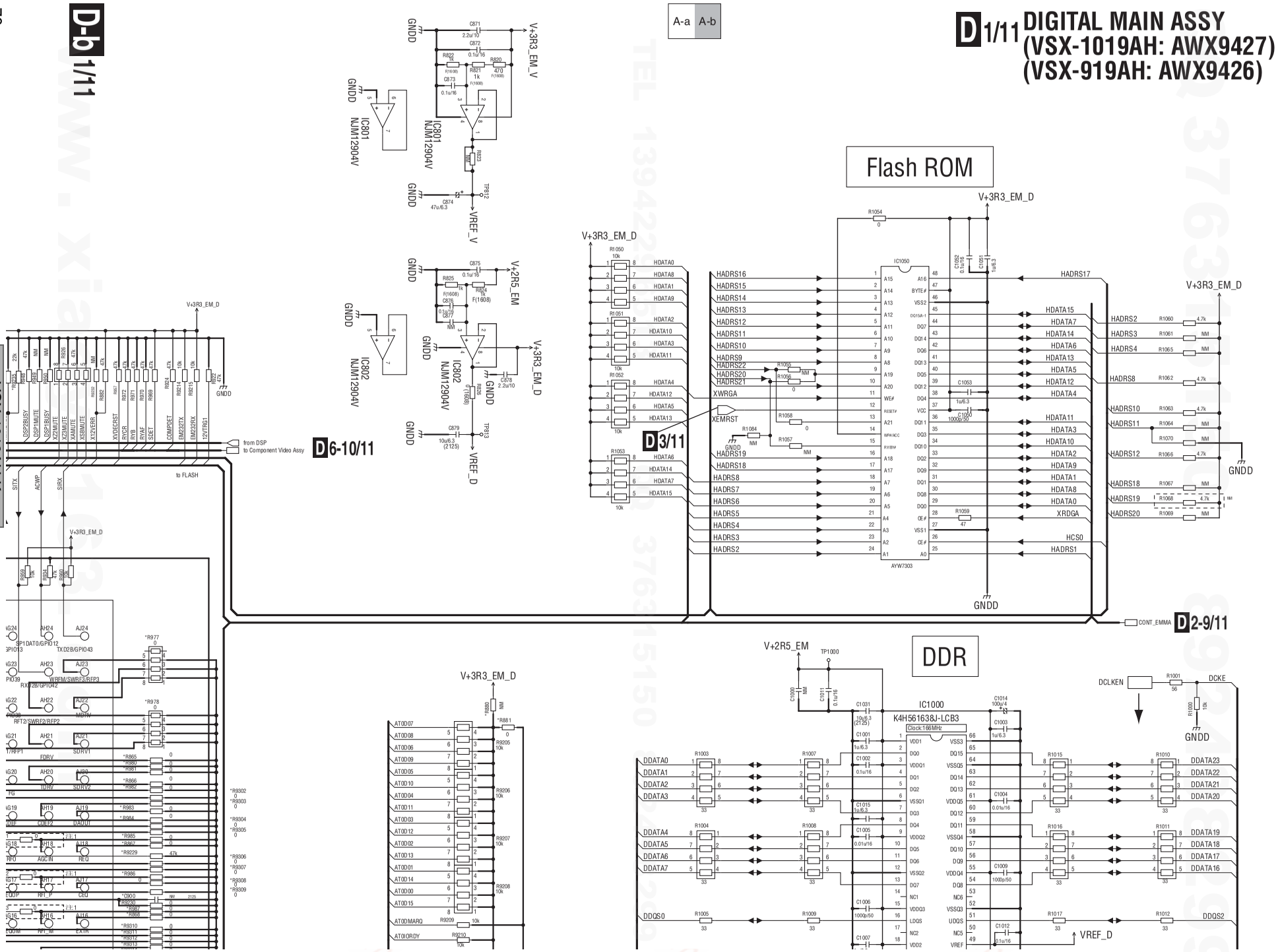

http://www.xiaoyu163.com

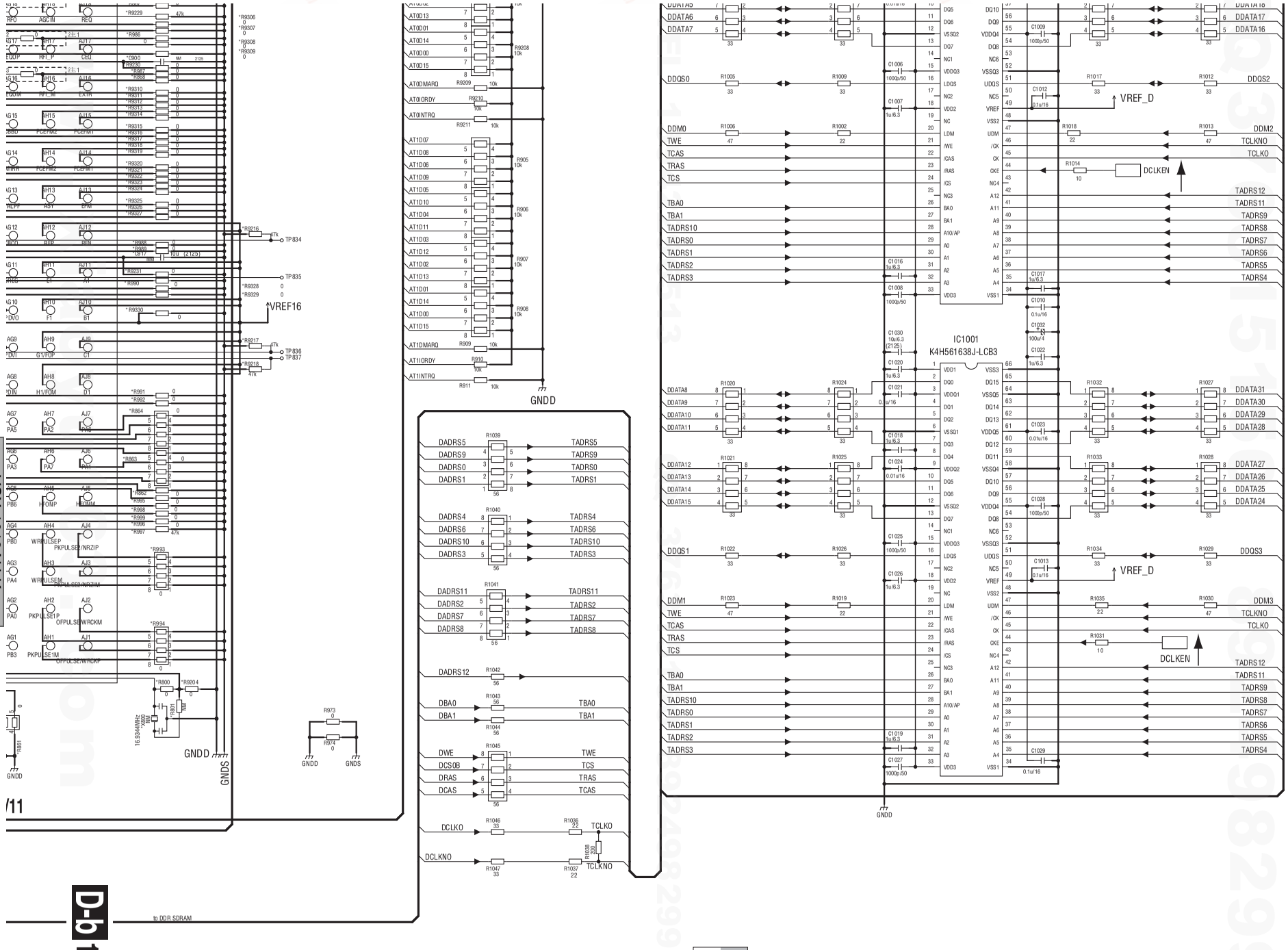

http://www.xiaoyu163.com

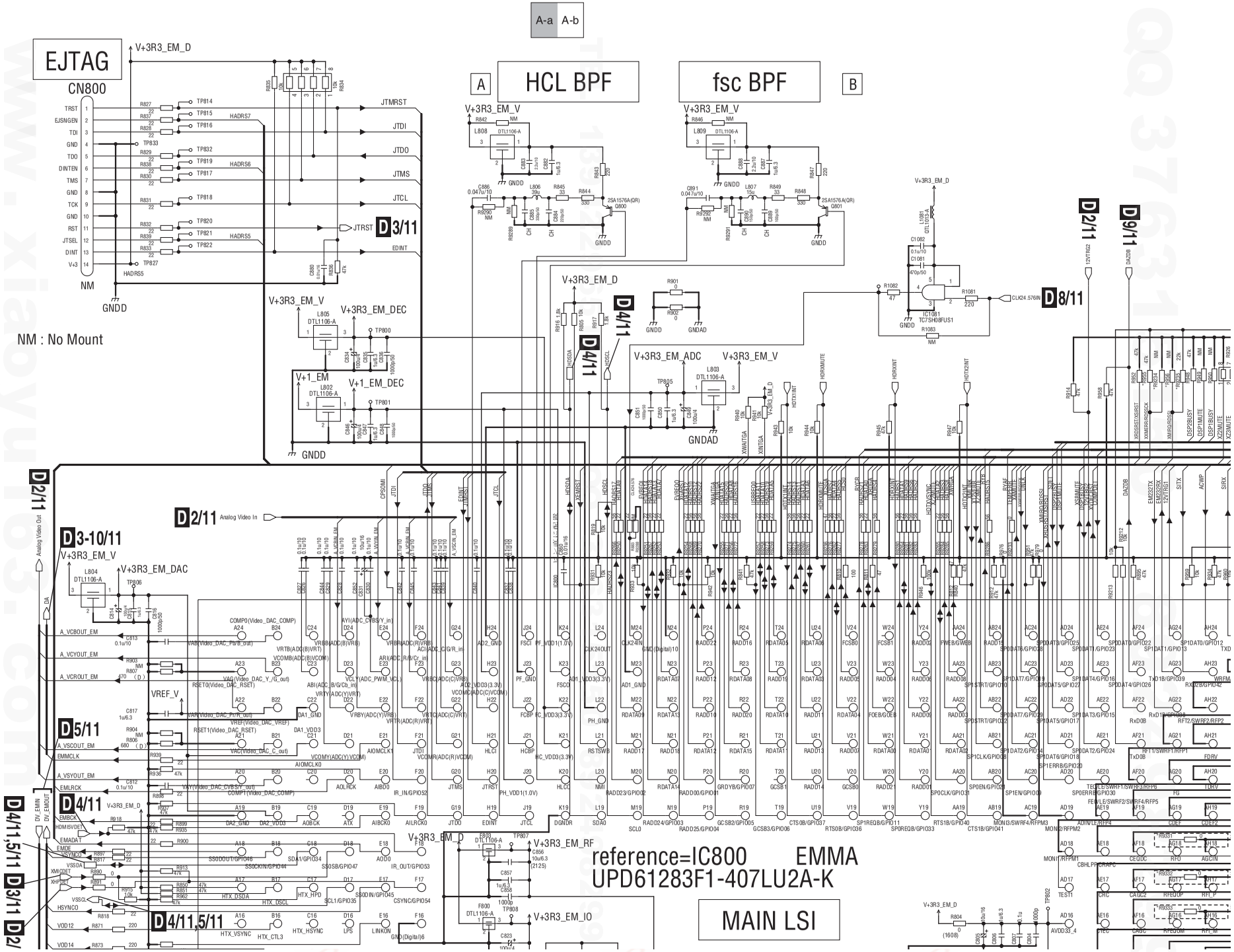

http://www.xiaoyu163.com

http://www.xiaoyu163.com

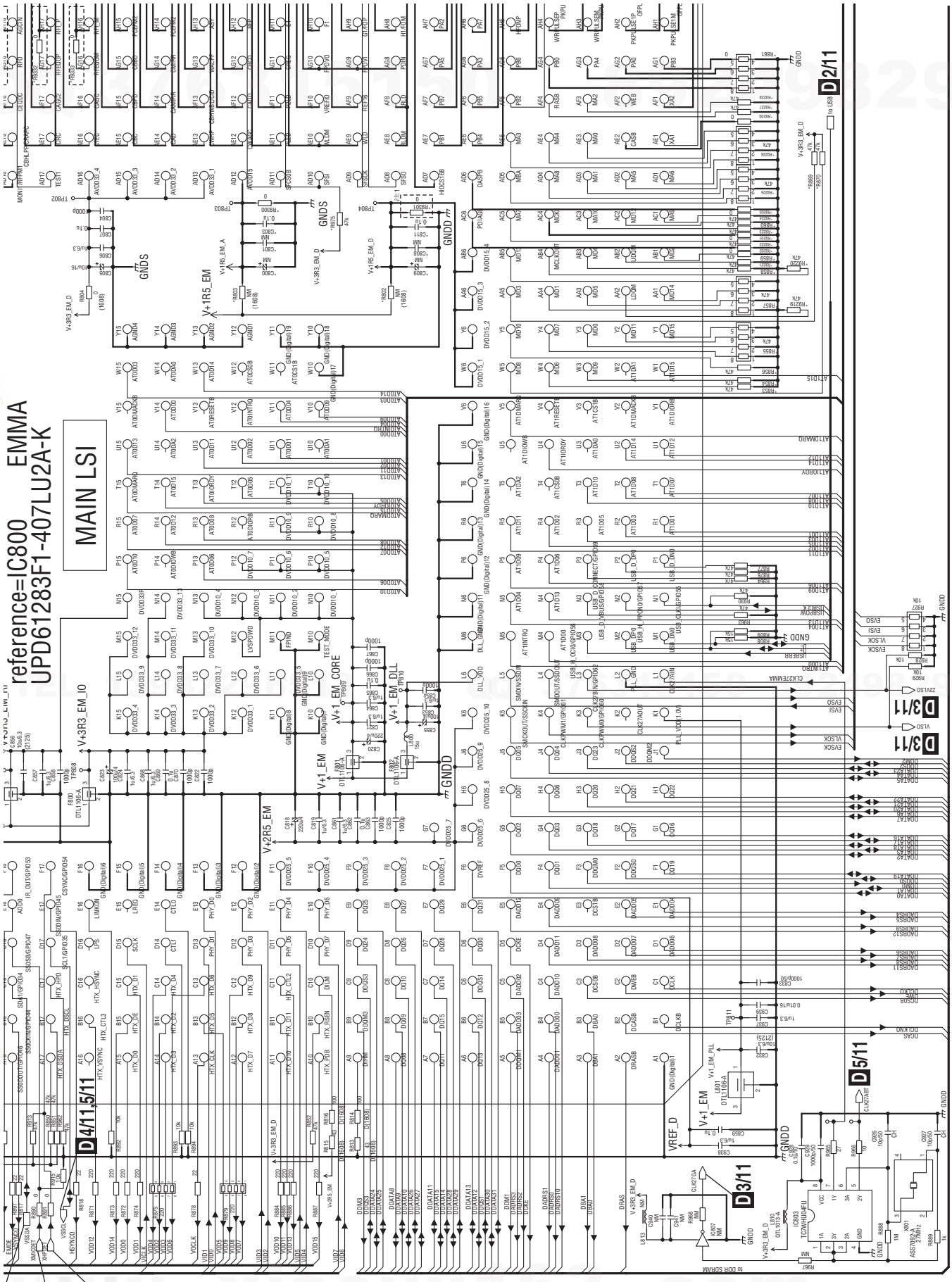

www.xiaoyu163.com

http://www.xiaoyu163.com

http://www.xiaoyu163.com

10.6 DIGITAL MAIN ASSY (2/11)

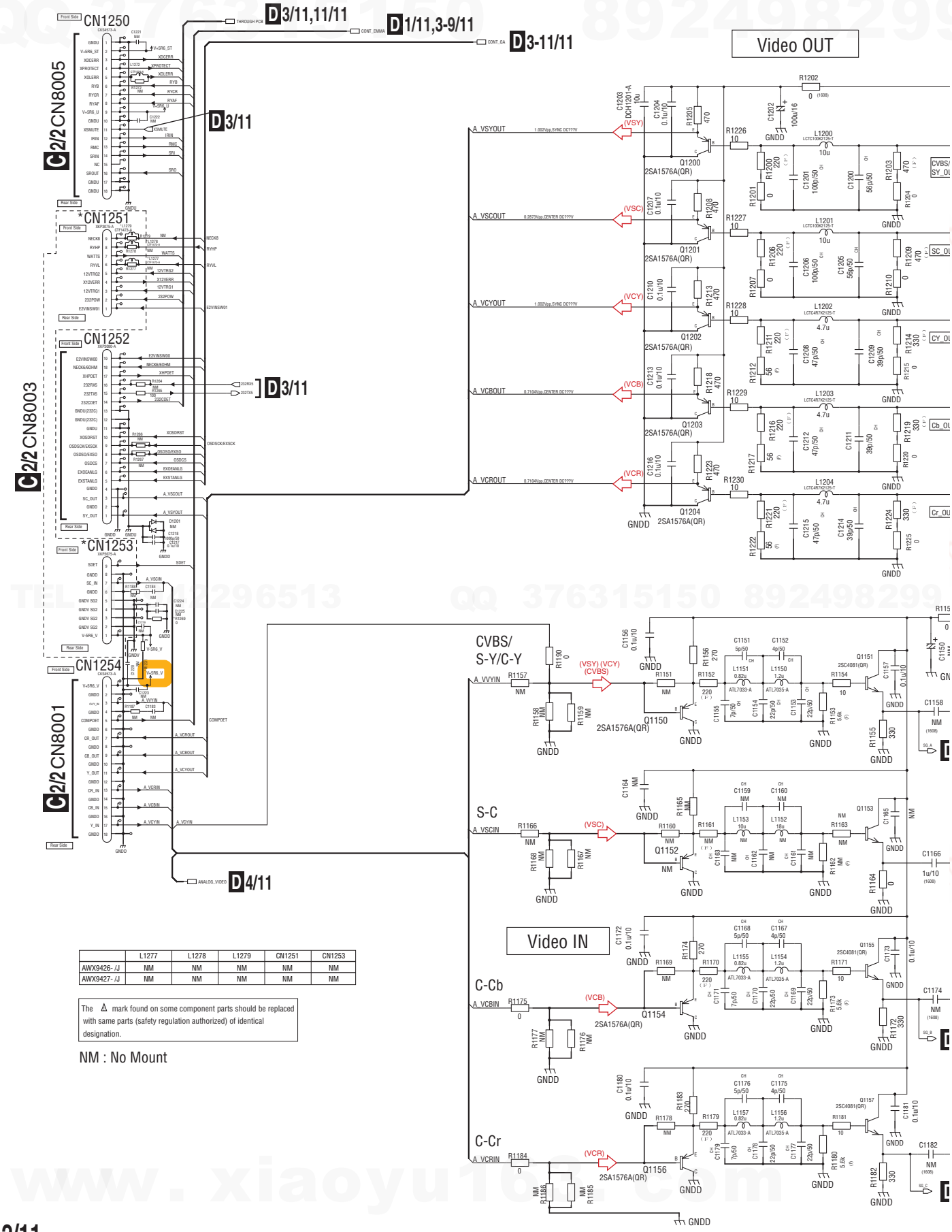

	L1277	L1278	L1279	CN1251	CN1253
AWX9426- /J	NM	NM	NM	NM	NM
AWX9427- /J	NM	NM	NM	NM	NM

The ⚠ mark found on some component parts should be replaced with same parts (safety regulation authorized) of identical designation.

NM : No Mount

D 2/11

http://www.xiaoyu163.com

http://www.xiaoyu163.com

D 2/11 DIGITAL MAIN ASSY (VSX-1019AH: AWX9427) (VSX-919AH: AWX9426)

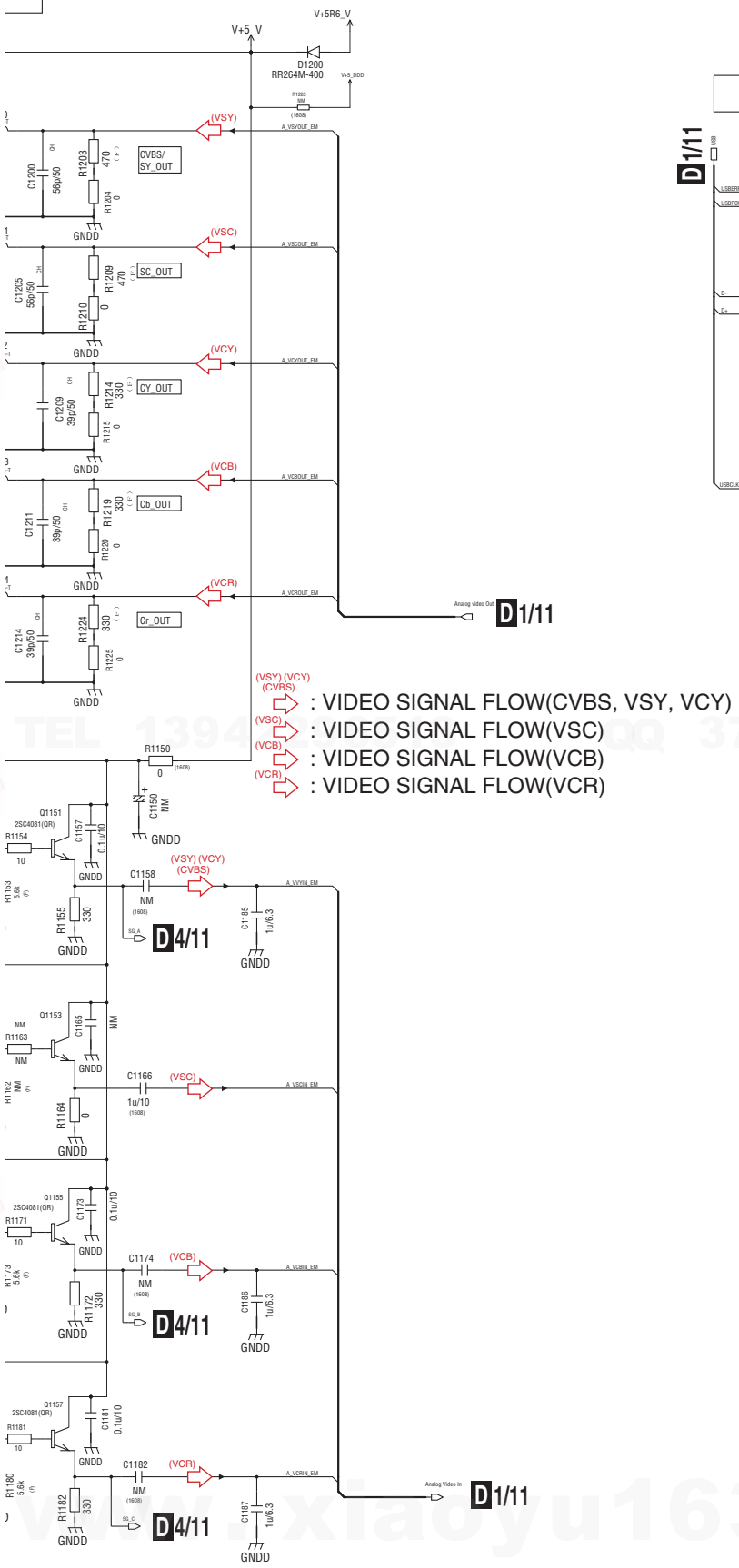

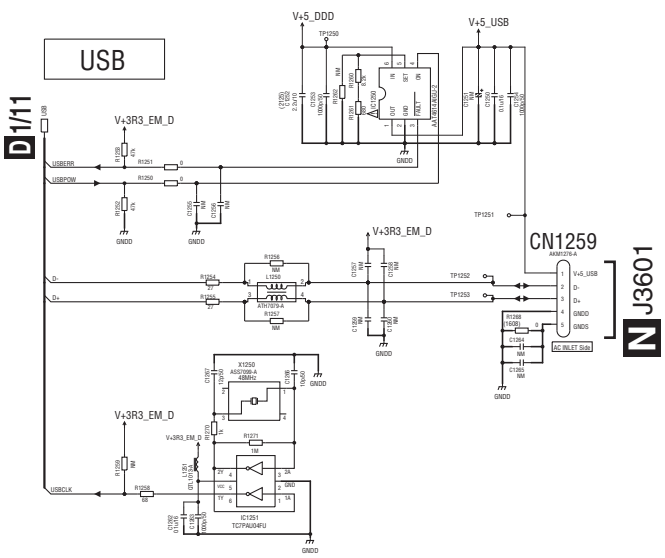

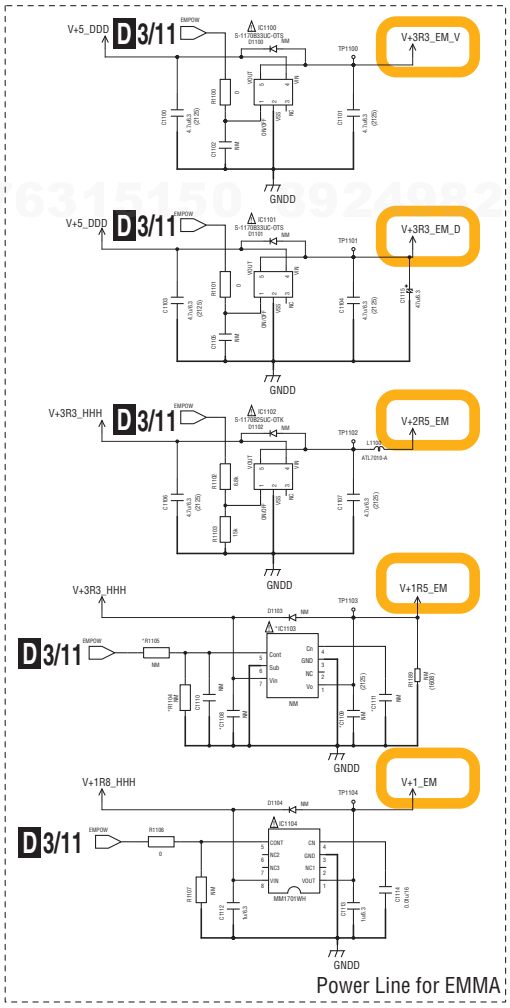

http://www.xiaoyu163.com

http://www.xiaoyu163.com

10.7 DIGITAL MAIN ASSY (3/11)

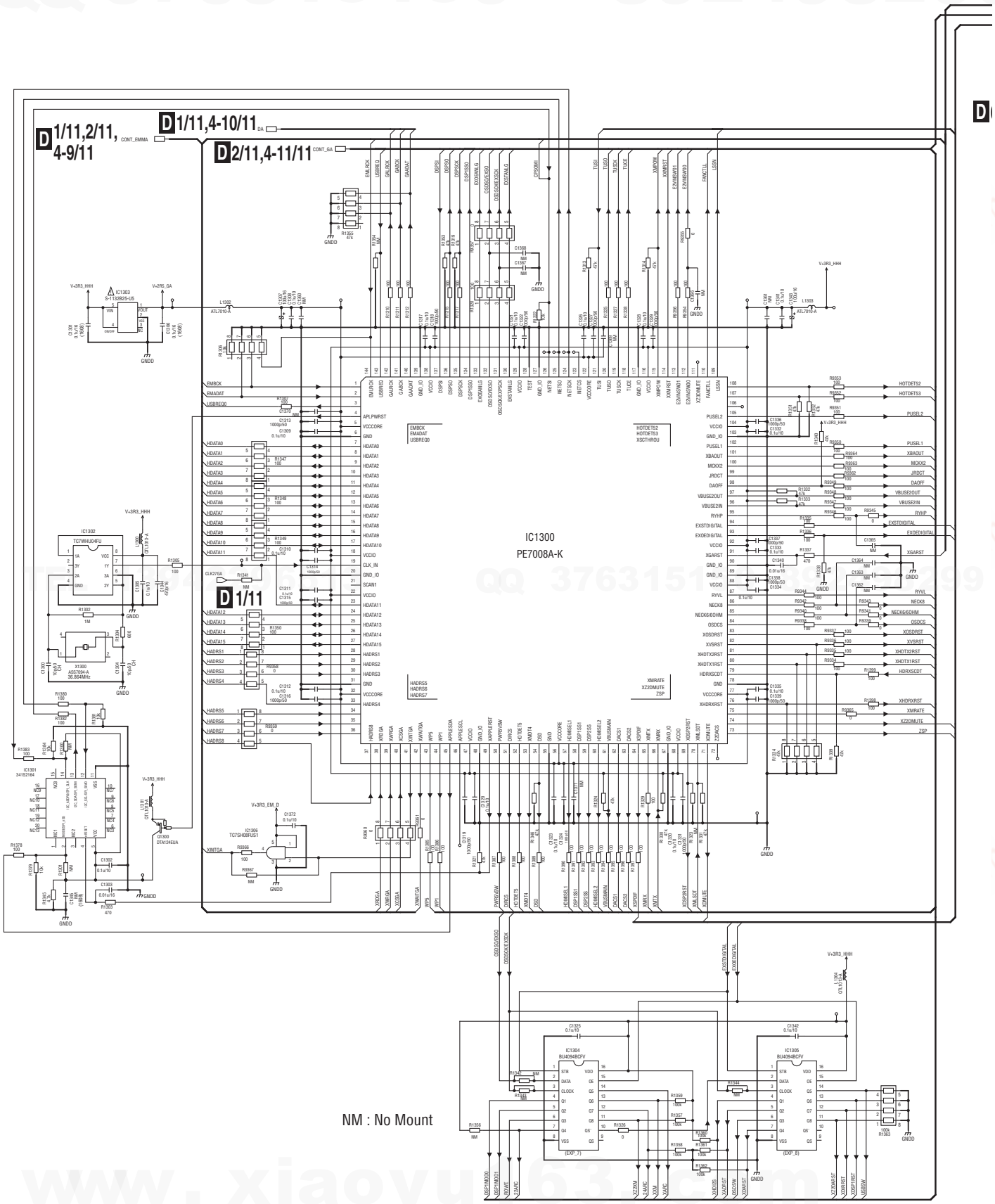

http://www.xiaoyu163.com

http://www.xiaoyu163.com

D 3/11 DIGITAL MAIN ASSY (VSX-1019AH: AWX9427) (VSX-919AH: AWX9426)

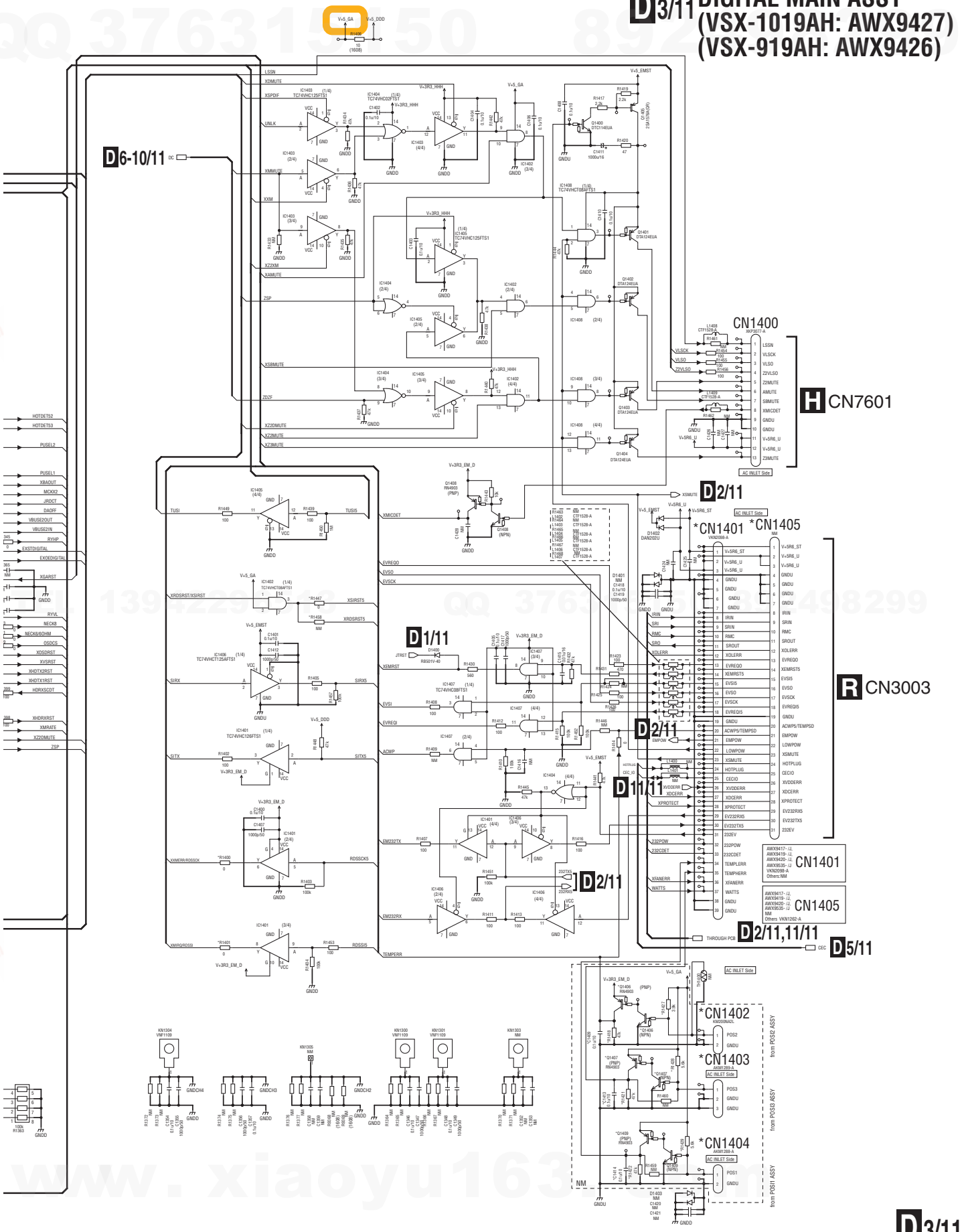

http://www.xiaoyu163.com

http://www.xiaoyu163.com

10.8 DIGITAL MAIN ASSY (4/11)

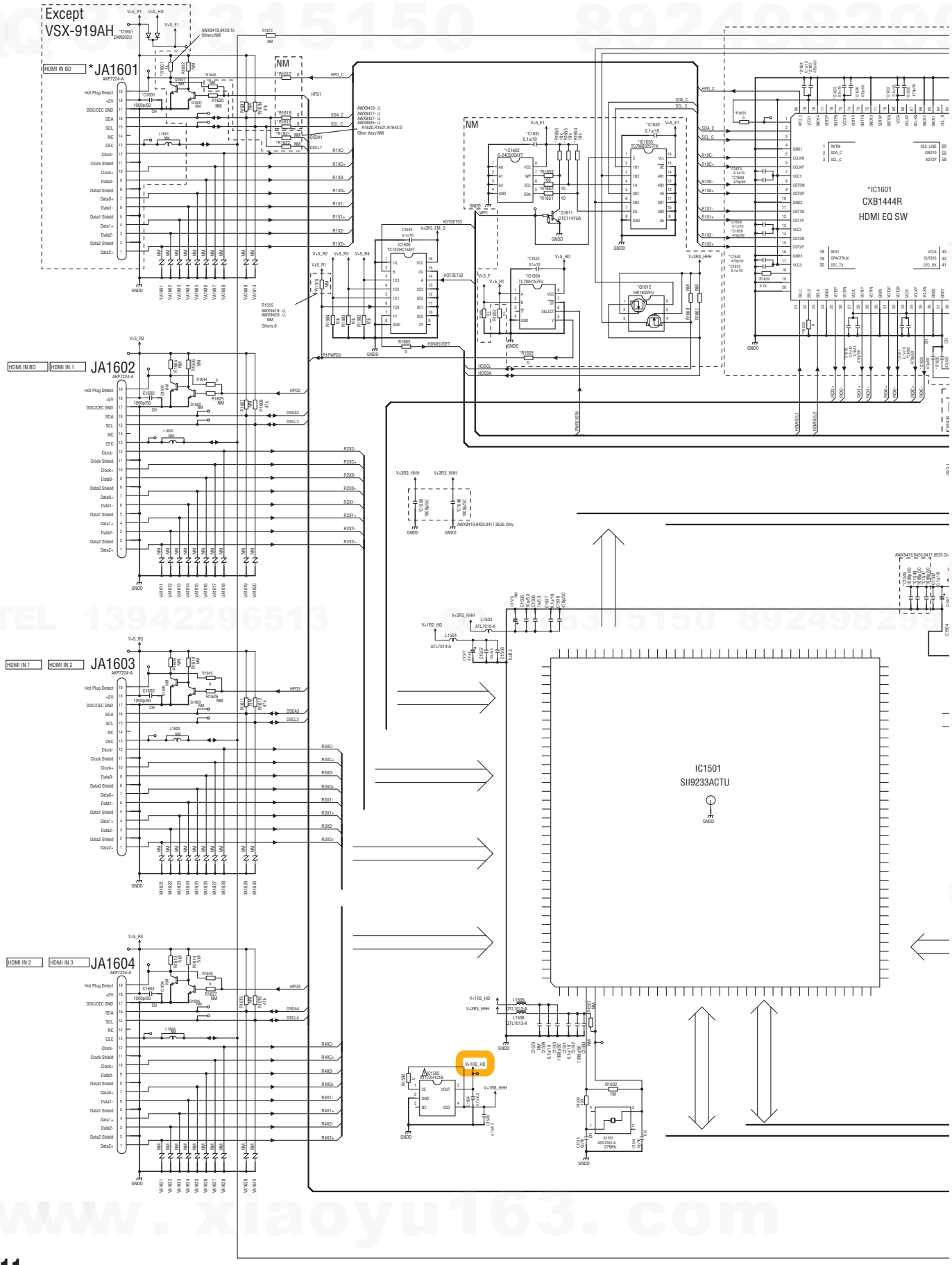

www.xiaoyu163.com

http://www.xiaoyu163.com

http://www.xiaoyu163.com

D 4/11 DIGITAL MAIN ASSY (VSX-1019AH: AWX9427) (VSX-919AH: AWX9426)

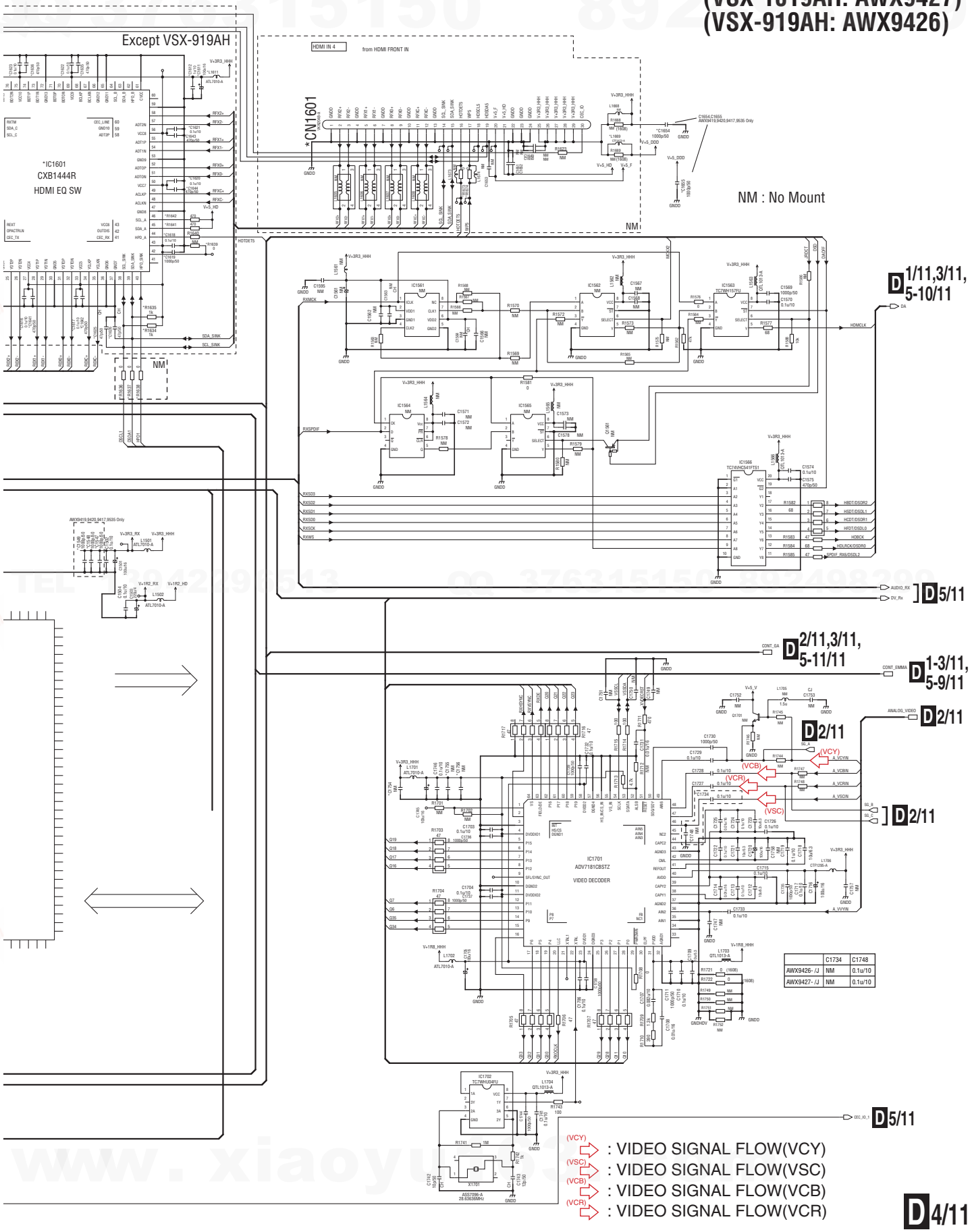

	C1734	C1748
AWX9426- /J	NM	0.1u/10
AWX9427- /J	NM	0.1u/10

http://www.xiaoyu163.com

http://www.xiaoyu163.com

10.9 DIGITAL MAIN ASSY (5/11)

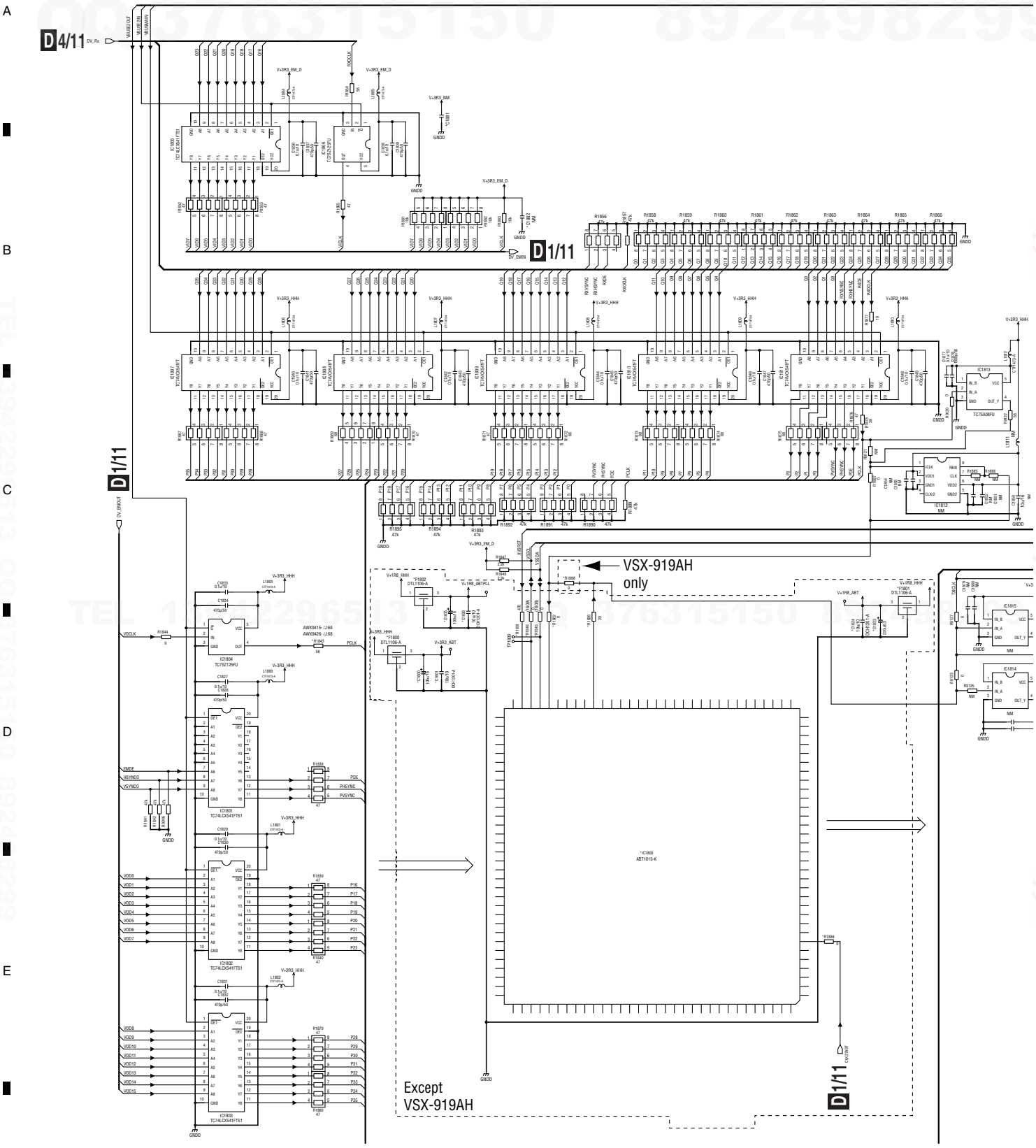

D 5/11

http://www.xiaoyu163.com

http://www.xiaoyu163.com

D 5/11 DIGITAL MAIN ASSY (VSX-1019AH : AWX9427) (VSX-919AH : AWX9426)

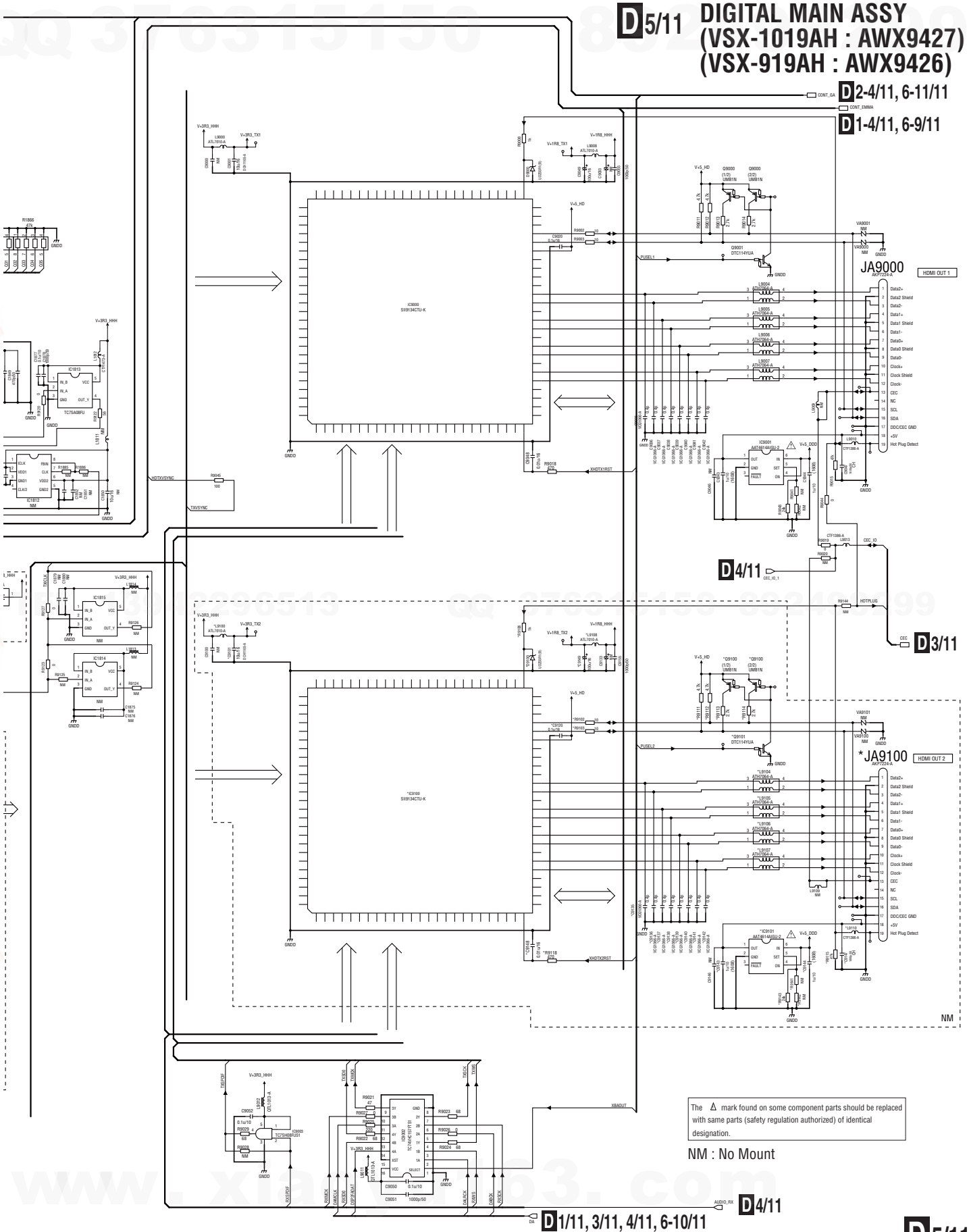

The Δ mark found on some component parts should be replaced with same parts (safety regulation authorized) of identical designation.

NM : No Mount

D 5/11

http://www.xiaoyu163.com

http://www.xiaoyu163.com

10.10 DIGITAL MAIN ASSY (6/11)

DIR	R121	IC101
AWX9426- /J	18k	AK4114VQ
AWX9427- /J	18k	AK4114VQ

The Δ mark found on some component parts should be replaced with same parts (safety regulation authorized) of identical designation.

NM : No Mount

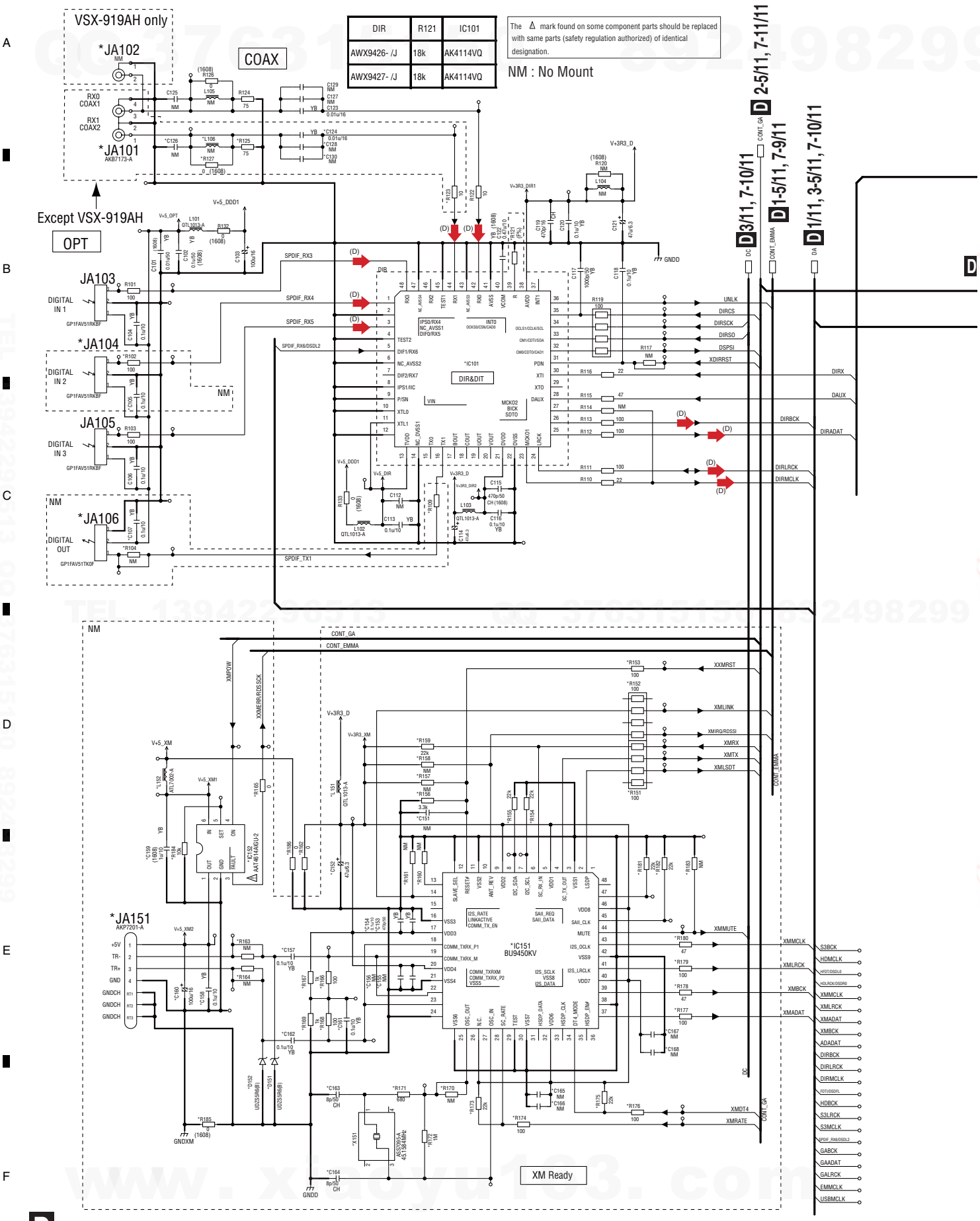

http://www.xiaoyu163.com

http://www.xiaoyu163.com

(D) : DIGITAL AUDIO FLOW

D 6/11 DIGITAL MAIN ASSY (VSX-1019AH: AWX9427) (VSX-919AH: AWX9426)

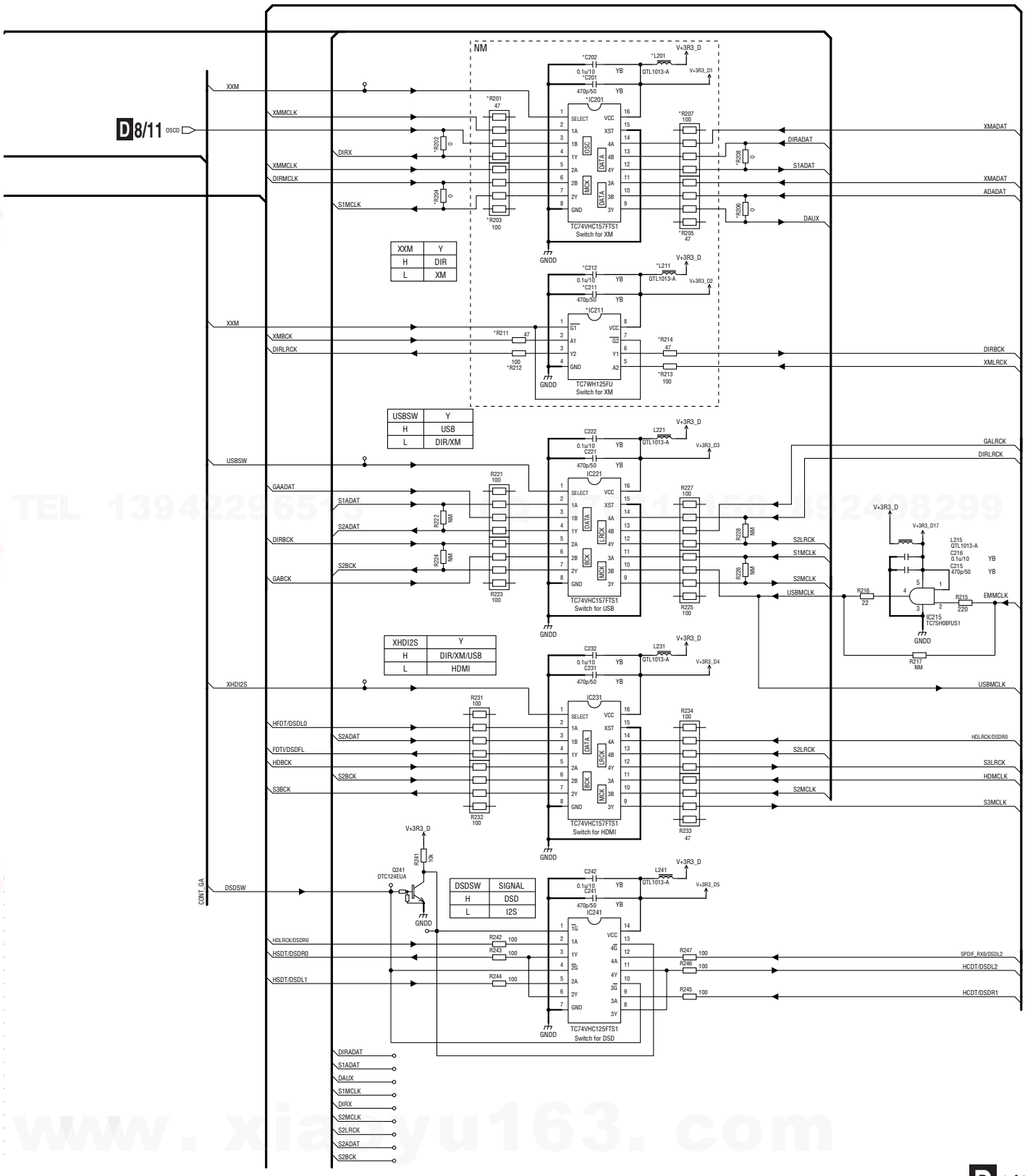

XXM	Y
H	DIR
L	XM

USBSW	Y
H	USB
L	DIR/XM

XHDI2S	Y
H	DIR/XM/USB
L	HDMI

DSDSW	SIGNAL
H	DSD
L	I2S

http://www.xiaoyu163.com

http://www.xiaoyu163.com

10.11 DIGITAL MAIN ASSY (7/11)

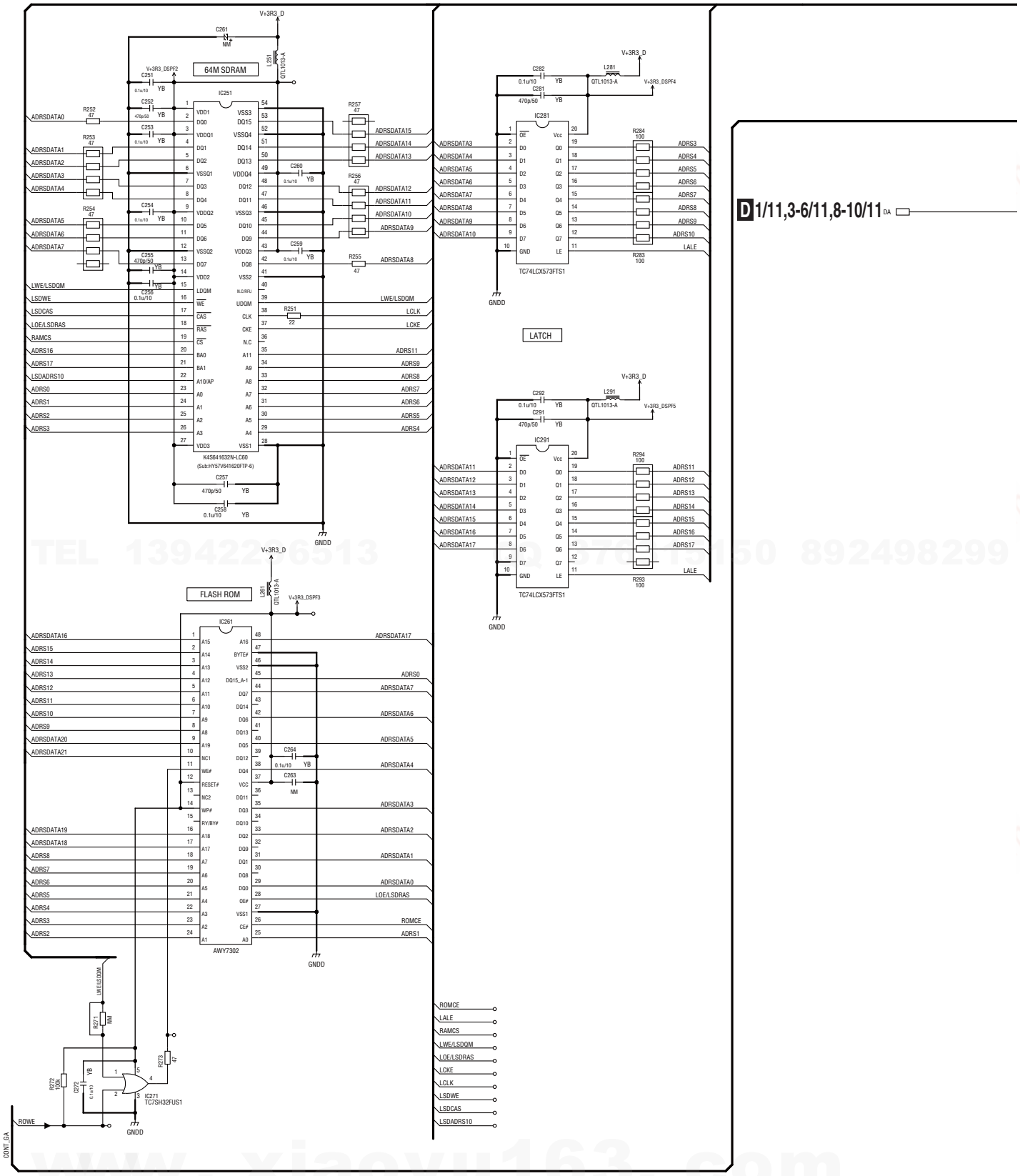

D 7/11

http://www.xiaoyu163.com

http://www.xiaoyu163.com

D 7/11 DIGITAL MAIN ASSY (VSX-1019AH: AWX9427) (VSX-919AH: AWX9426)

DSPchemicon	C333
AWX9426- /J	100u/16
AWX9427- /J	100u/16

NM : No Mount

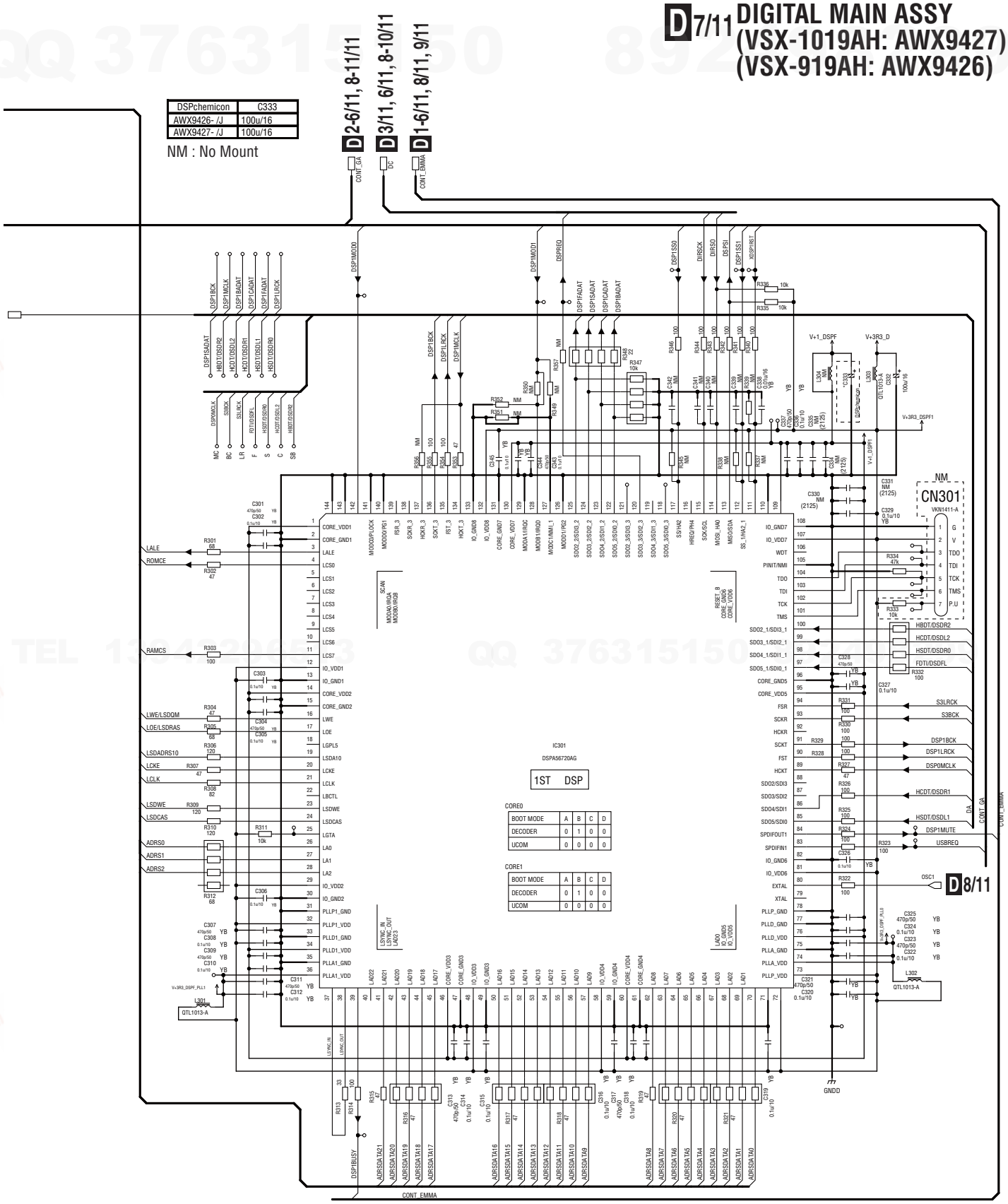

QQ 376315150 892429299
TEL 13942296513 QQ 376315150 892429299
www.xiaoyu163.com

http://www.xiaoyu163.com

http://www.xiaoyu163.com

10.12 DIGITAL MAIN ASSY (8/11)

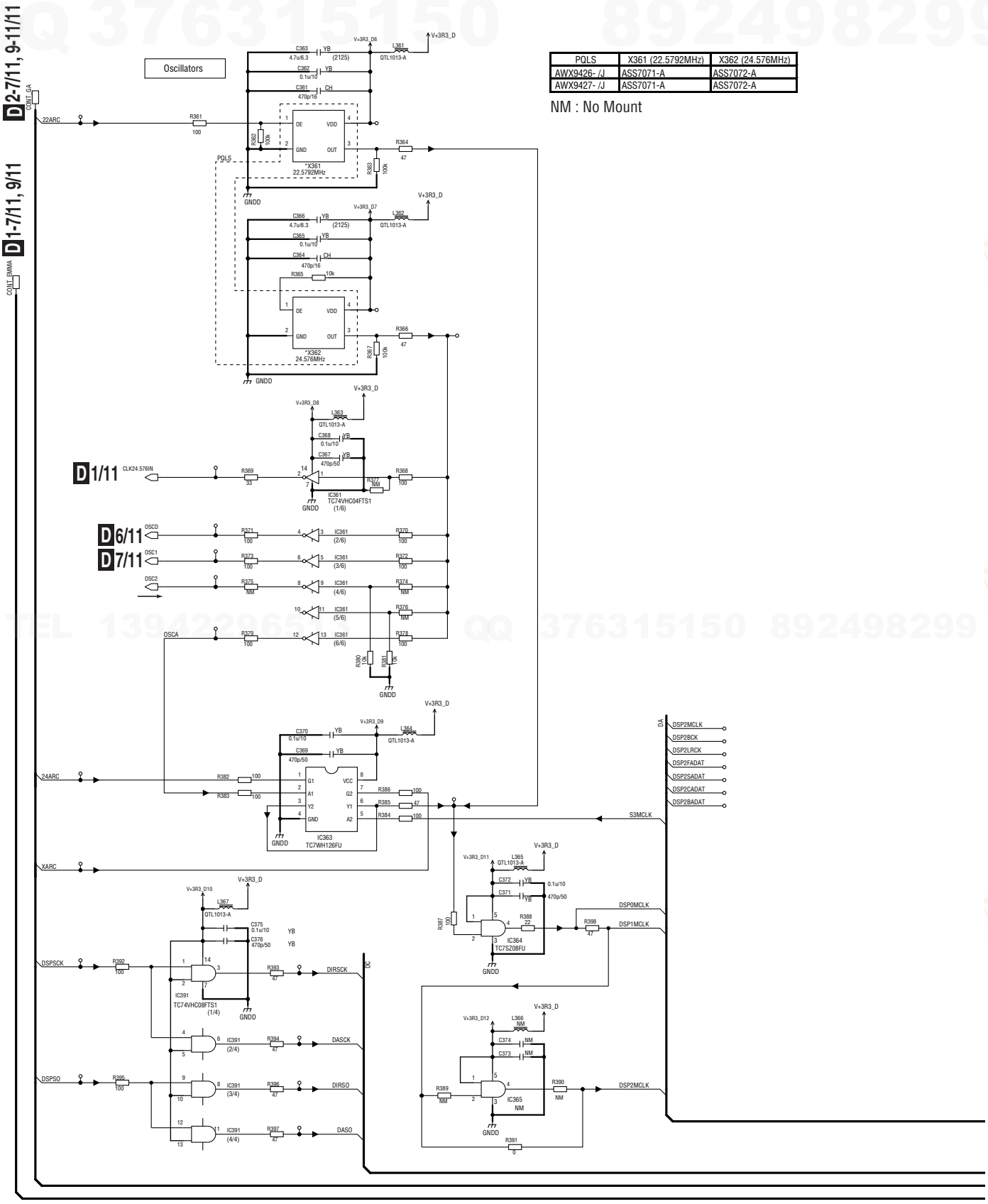

PQLS	X361 (22.5792MHz)	X362 (24.576MHz)
AWX9426- /J	ASS7071-A	ASS7072-A
AWX9427- /J	ASS7071-A	ASS7072-A

NM : No Mount

QQ 376315150 892498299
TEL 13942296513 QQ 376315150 892498299
www.xiaoyu163.com

http://www.xiaoyu163.com

http://www.xiaoyu163.com

D 8/11 DIGITAL MAIN ASSY (VSX-1019AH: AWX9427) (VSX-919AH: AWX9426)

D 3/11, 6/11, 7/11, 9/11, 10/11
D 1/11, 3-7/11, 9/11, 10/11

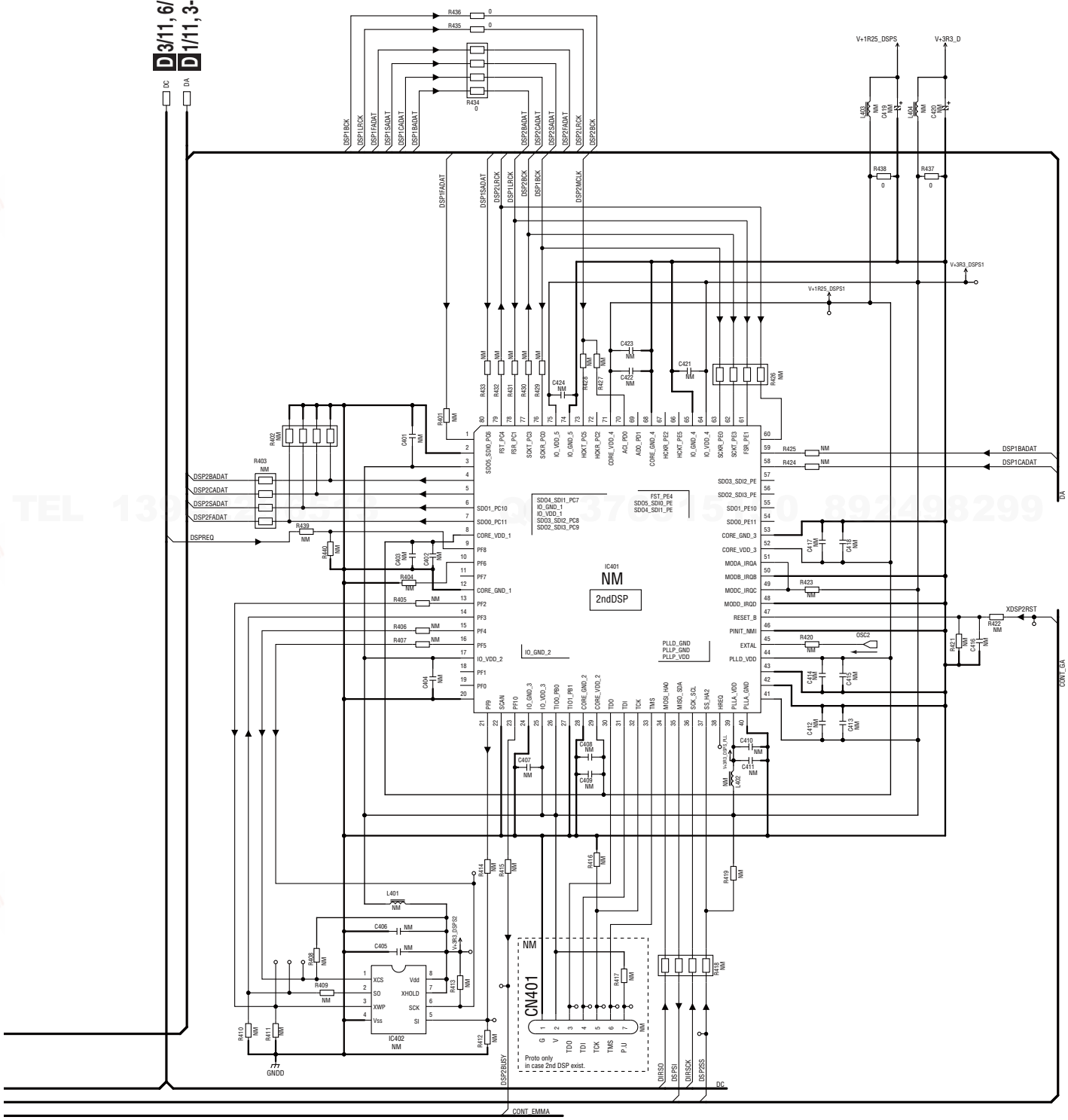

http://www.xiaoyu163.com

http://www.xiaoyu163.com

10.13 DIGITAL MAIN ASSY (9/11)

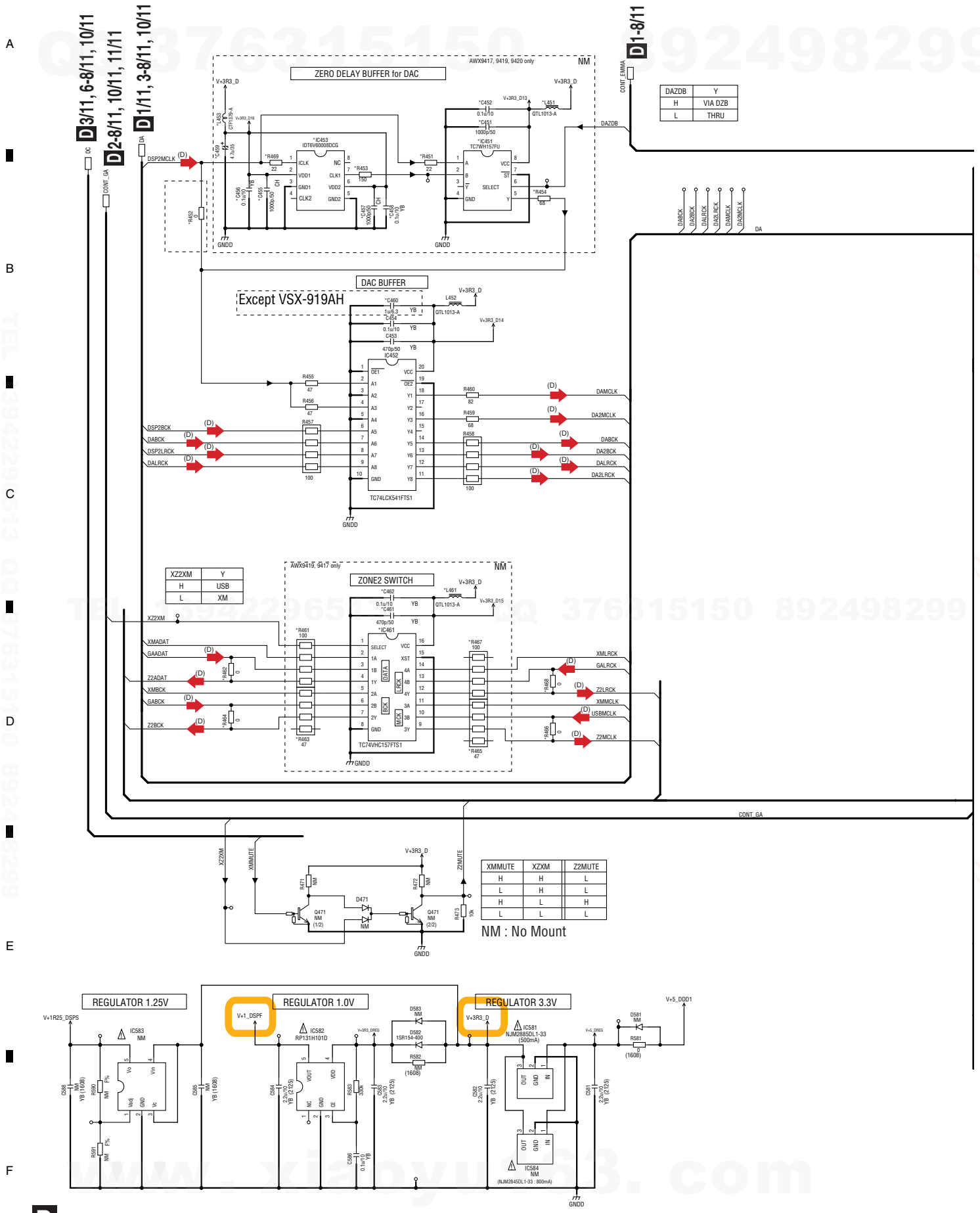

D 9/11

http://www.xiaoyu163.com

http://www.xiaoyu163.com

D 9/11 DIGITAL MAIN ASSY (VSX-1019AH: AWX9427) (VSX-919AH: AWX9426)

: AUDIO SIGNAL FLOW

(D) : DIGITAL AUDIO SIGNAL FLOW

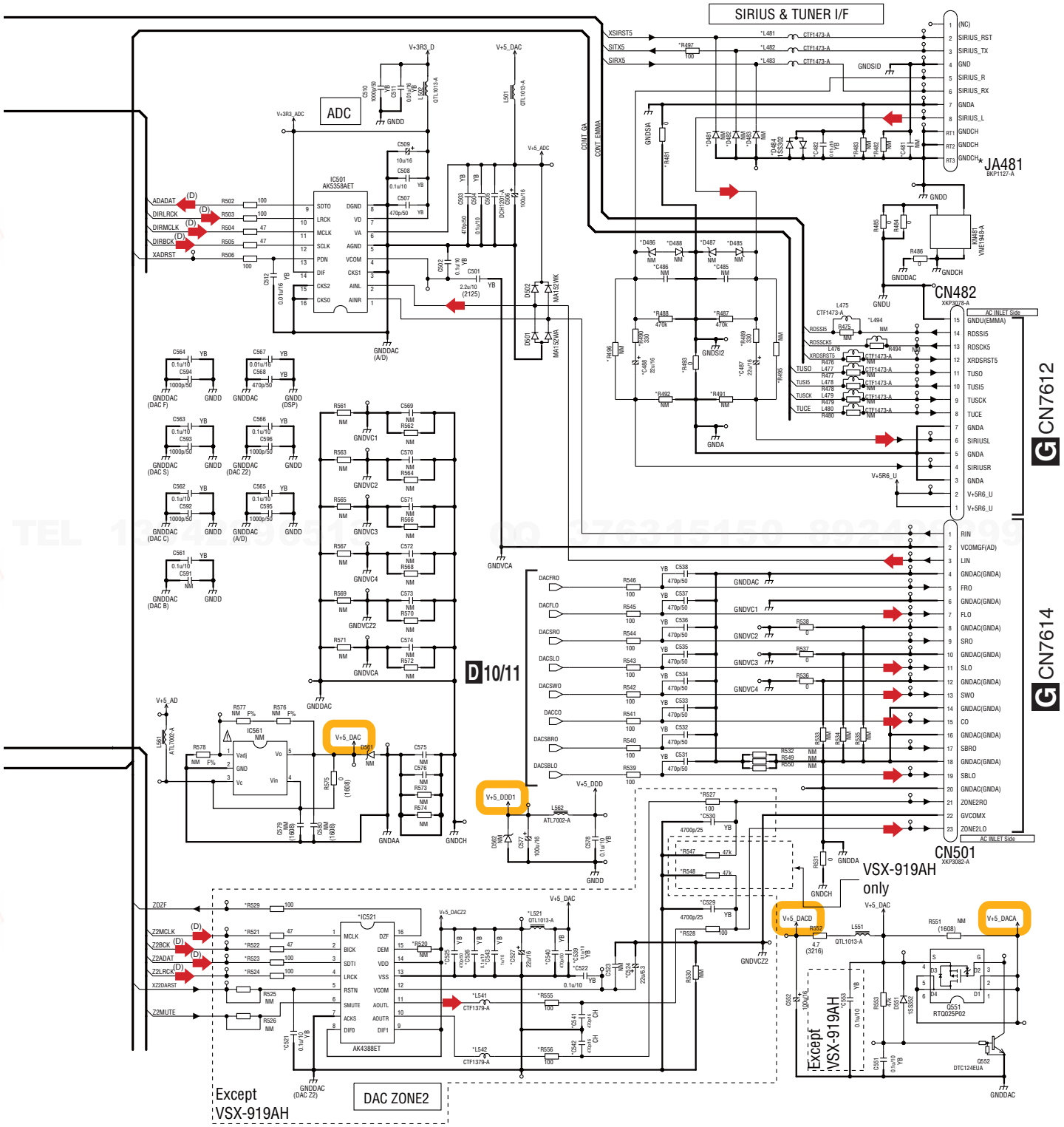

The ⚠ mark found on some component parts should be replaced with same parts (safety regulation authorized) of identical designation.

http://www.xiaoyu163.com

http://www.xiaoyu163.com

10.14 DIGITAL MAIN ASSY (10/11)

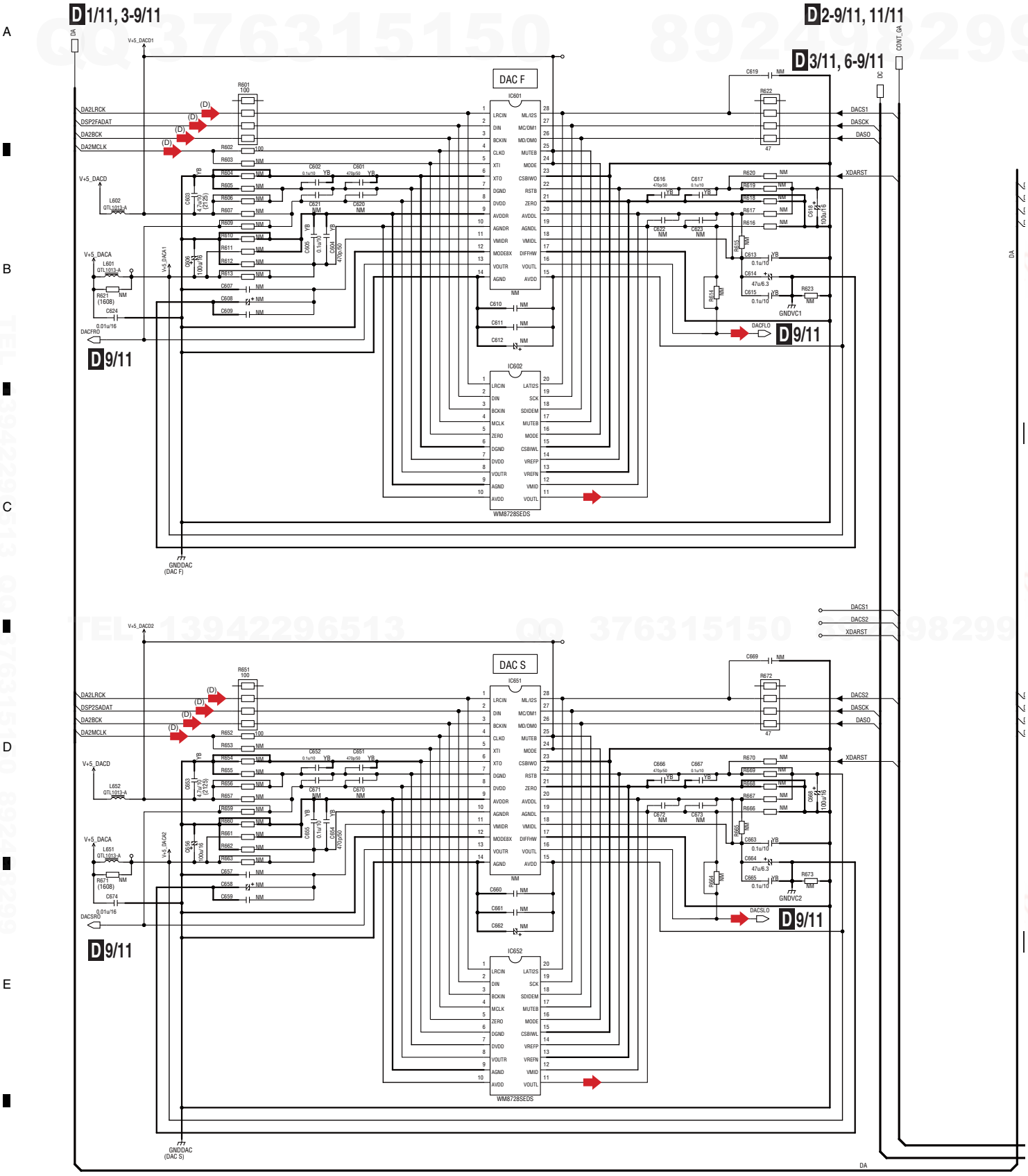

QQ 376315150 892498299
TEL 13942296513 QQ 376315150 892498299
www.xiaoyu163.com

D 10/11

http://www.xiaoyu163.com

http://www.xiaoyu163.com

D 10/11 DIGITAL MAIN ASSY (VSX-1019AH: AWX9427) (VSX-919AH: AWX9426)

: AUDIO SIGNAL FLOW

(D) : DIGITAL AUDIO SIGNAL FLOW

NM : No Mount

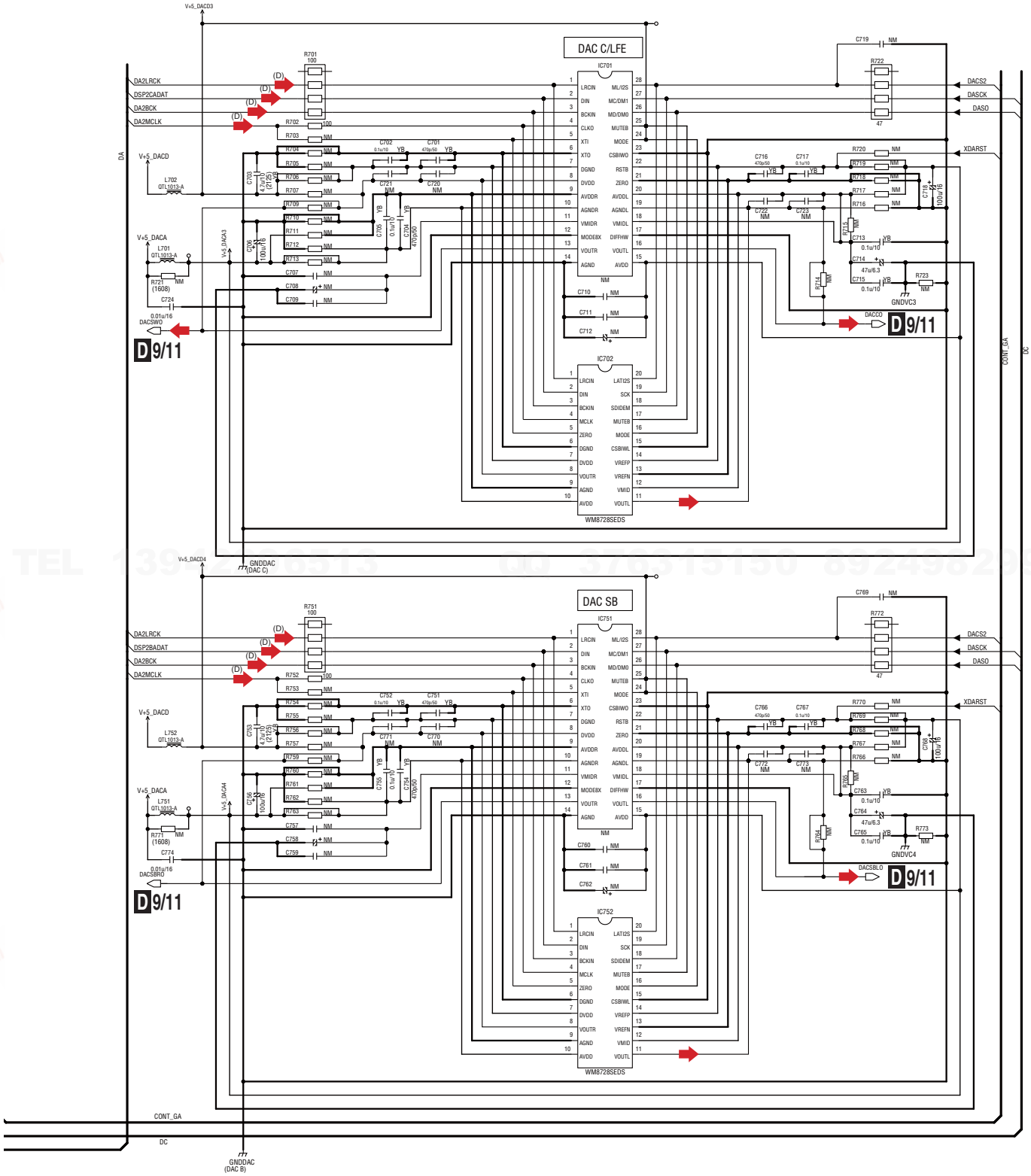

http://www.xiaoyu163.com

http://www.xiaoyu163.com

10.15 DIGITAL MAIN ASSY (11/11)

	R1992	CN1900	CN1901	CN1902	CN1903	CN1904
AWX9426- /J	0	NM	NM	NM	KM200NA4	B4B-EH
AWX9427- /J	0	NM	NM	NM	KM200NA4	B4B-EH

NM : No Mount

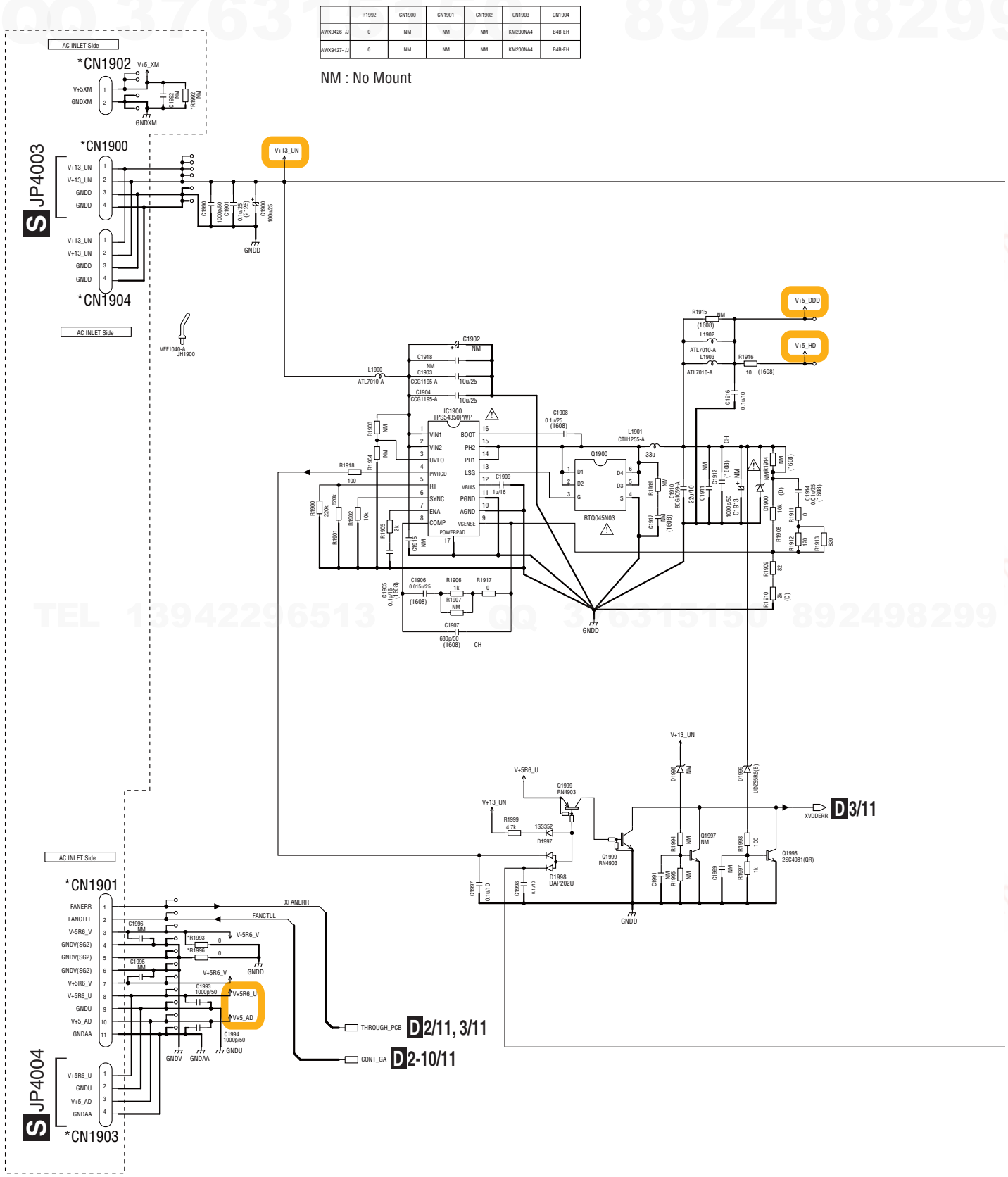

The ⚠ mark found on some component parts should be replaced with same parts (safety regulation authorized) of identical designation.

D 11/11

http://www.xiaoyu163.com

http://www.xiaoyu163.com

D 11/11 DIGITAL MAIN ASSY (VSX-1019AH: AWX9427) (VSX-919AH: AWX9426)

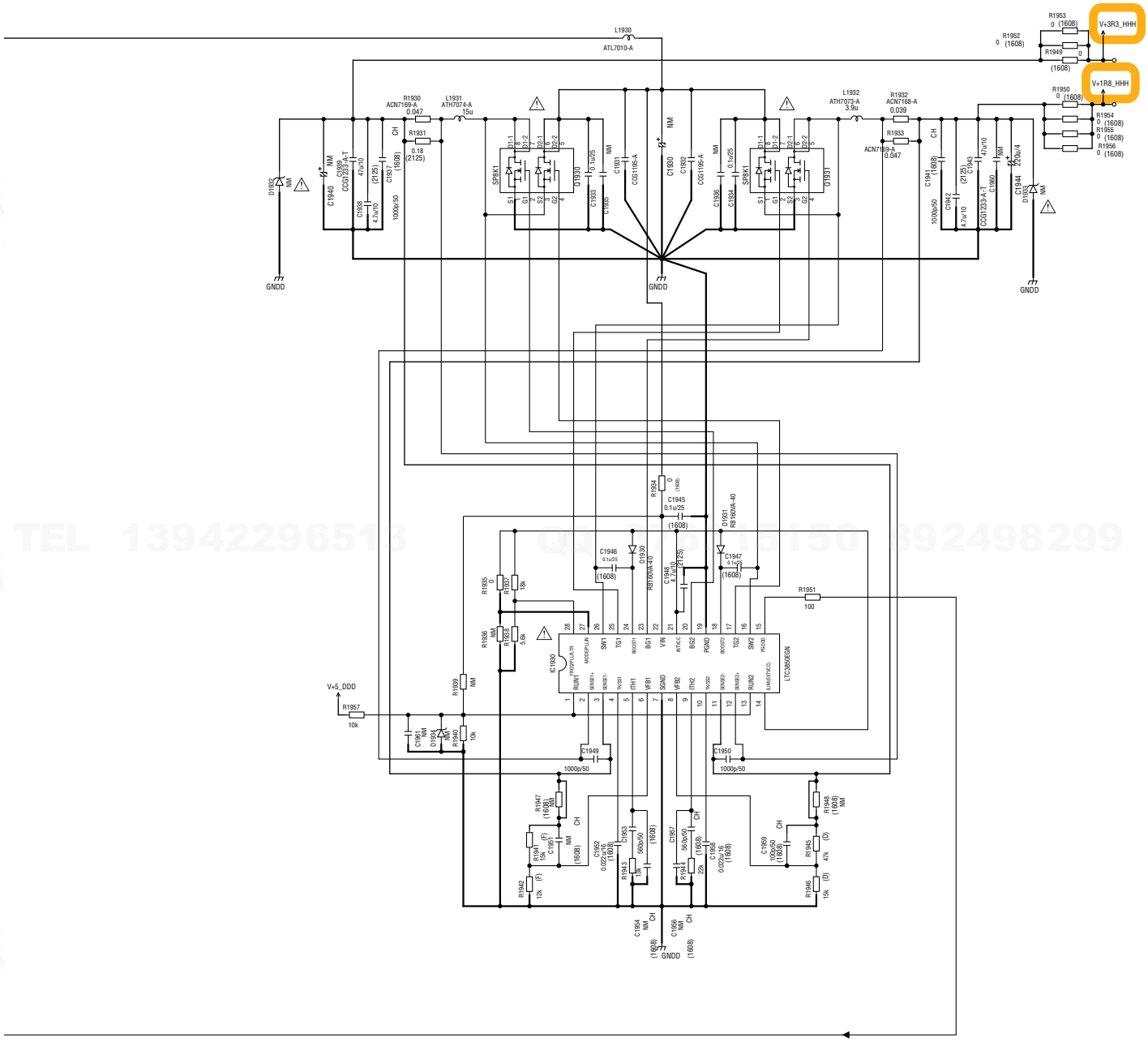

http://www.xiaoyu163.com

http://www.xiaoyu163.com

10.16 POWER PACK ASSY (1/2)

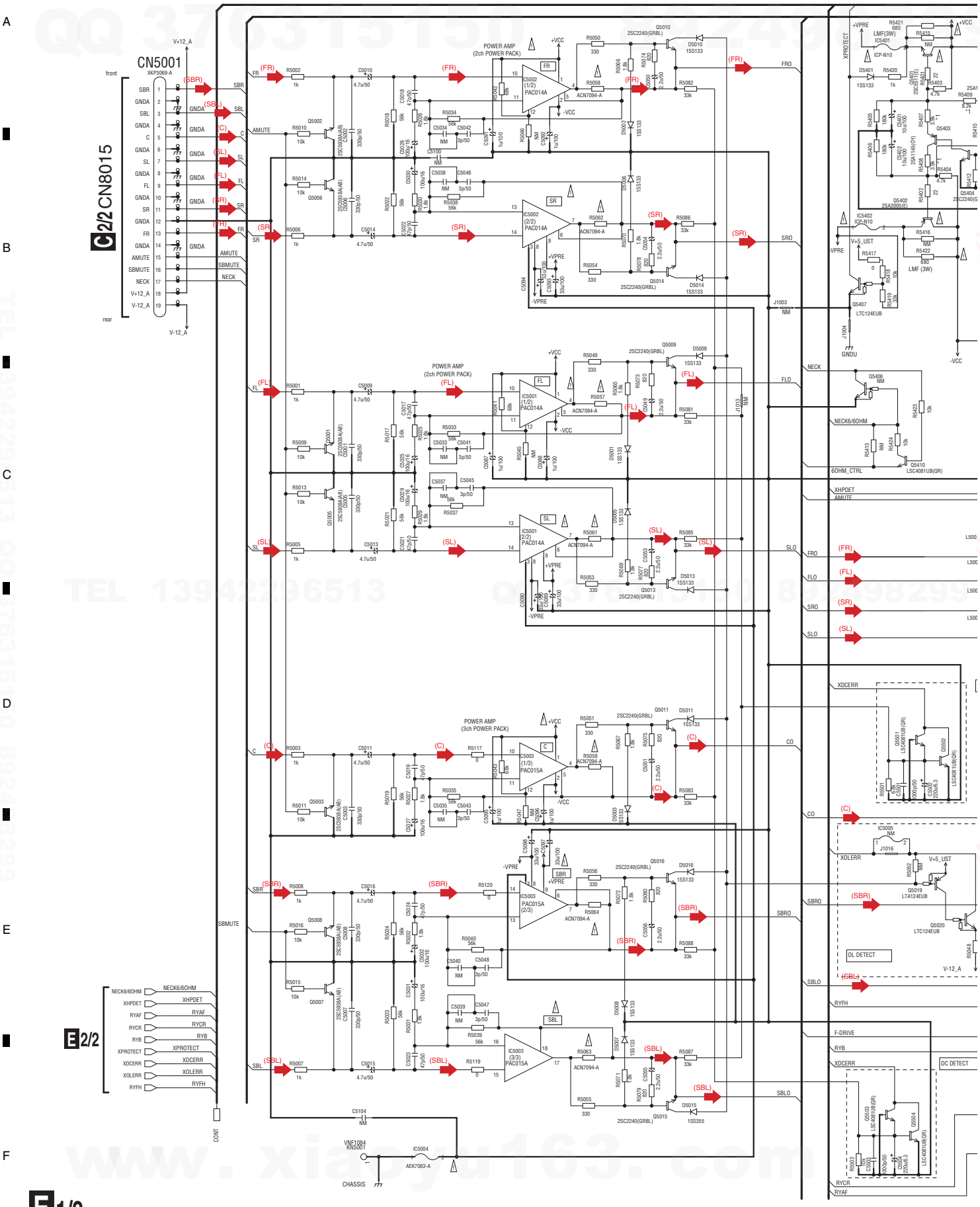

http://www.xiaoyu163.com

http://www.xiaoyu163.com

E 1/2 POWER PACK ASSY (AWX9337)

CAUTION : FOR CONTINUED PROTECTION AGAINST RISK OF FIRE. REPLACE ONLY WITH SAME TYPE NO. 491.800 MFD, BY LITTELFUSE INK. FOR IC5004.

CAUTION : FOR CONTINUED PROTECTION AGAINST RISK OF FIRE. REPLACE ONLY WITH SAME TYPE NO. ICP-N10, MFD BY ROHM CO., LTD. FOR IC5401 and IC5402.

The ⚠ mark found on some component parts should be replaced with same parts (safety regulation authorized) of identical designation.

NM : No Mount

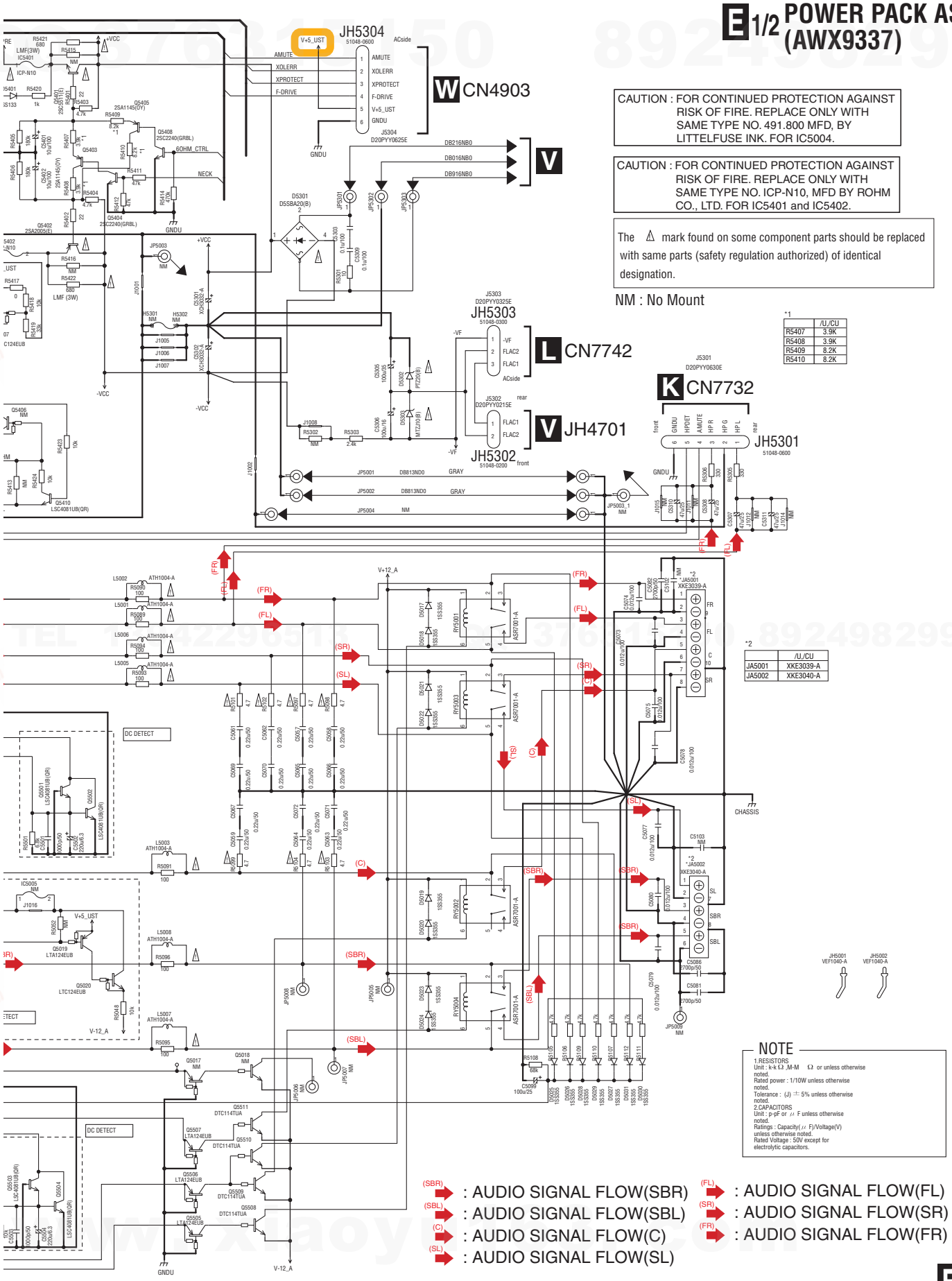

*1

	/U,/CU
R5407	3.9K
R5408	3.9K
R5409	8.2K
R5410	8.2K

*2

	/U,/CU
JA5001	XKE3039-A
JA5002	XKE3040-A

E 1/2

http://www.xiaoyu163.com

http://www.xiaoyu163.com

10.17 POWER PACK (2/2), IR/SR, BRIDGE 1 AND BRIDGE 2 ASSYS

E POWER PACK ASSY (AWX9337)

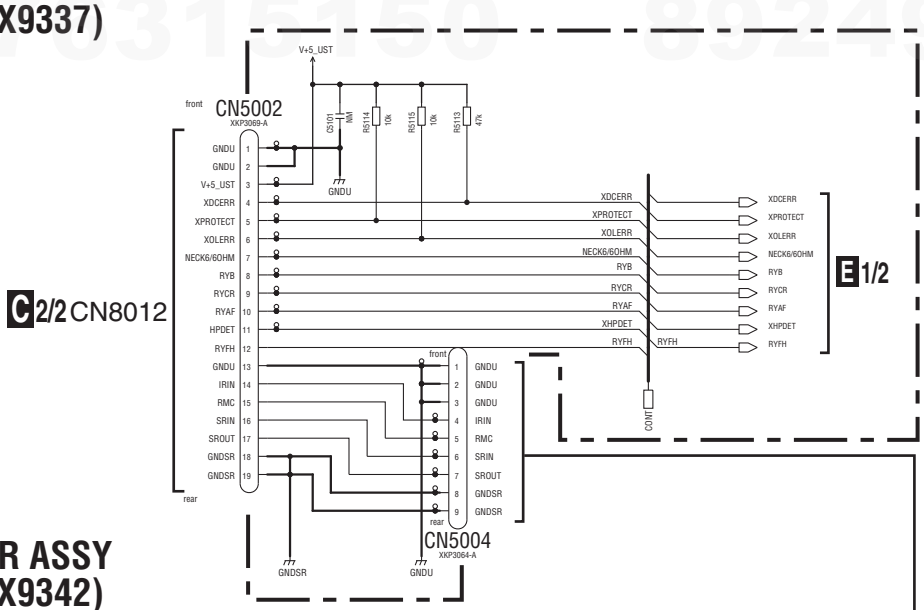

NM : No Mount

F IR/SR ASSY (AWX9342)

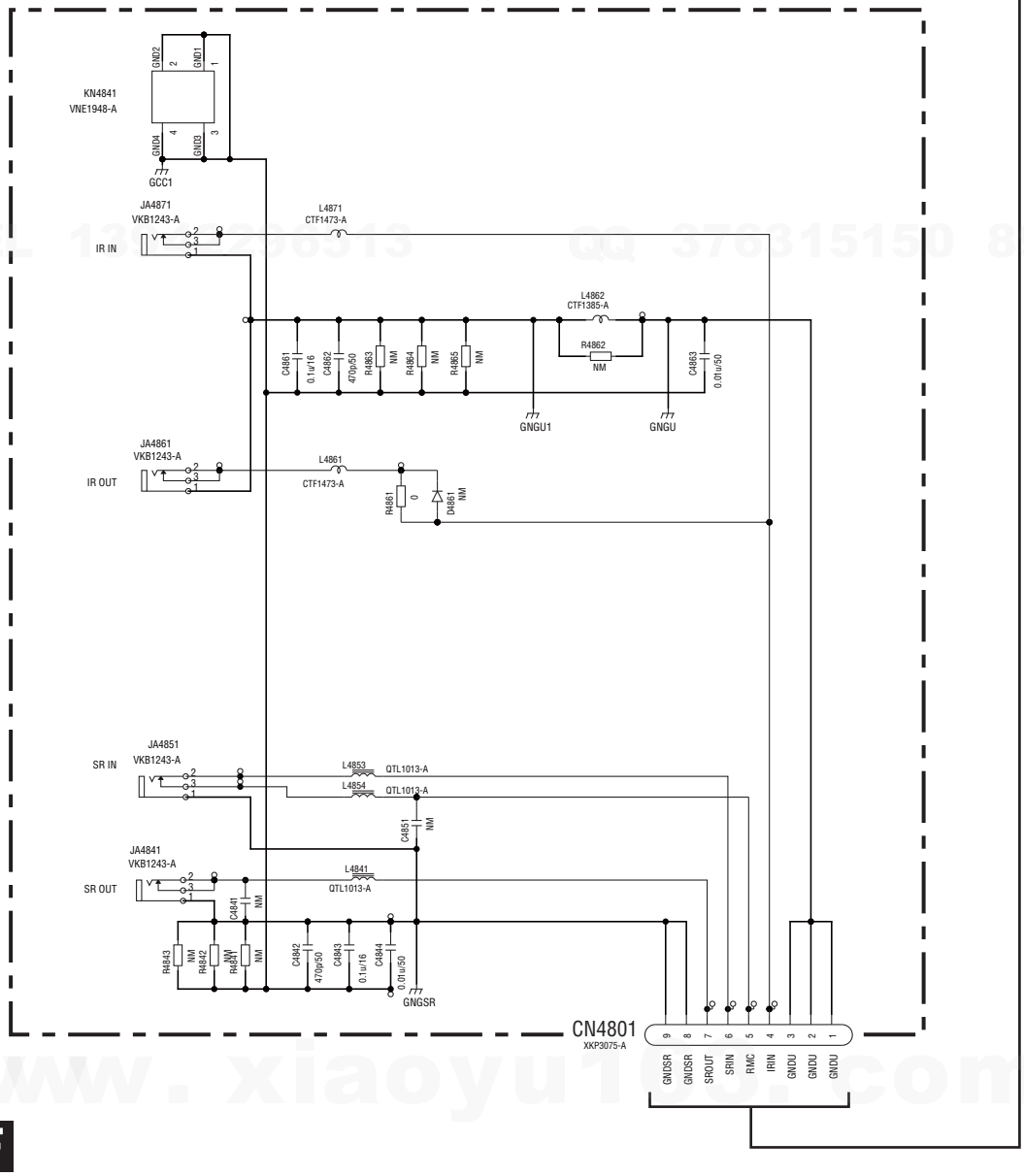

http://www.xiaoyu163.com

http://www.xiaoyu163.com

G BRIDGE 2 ASSY (AWX9349)

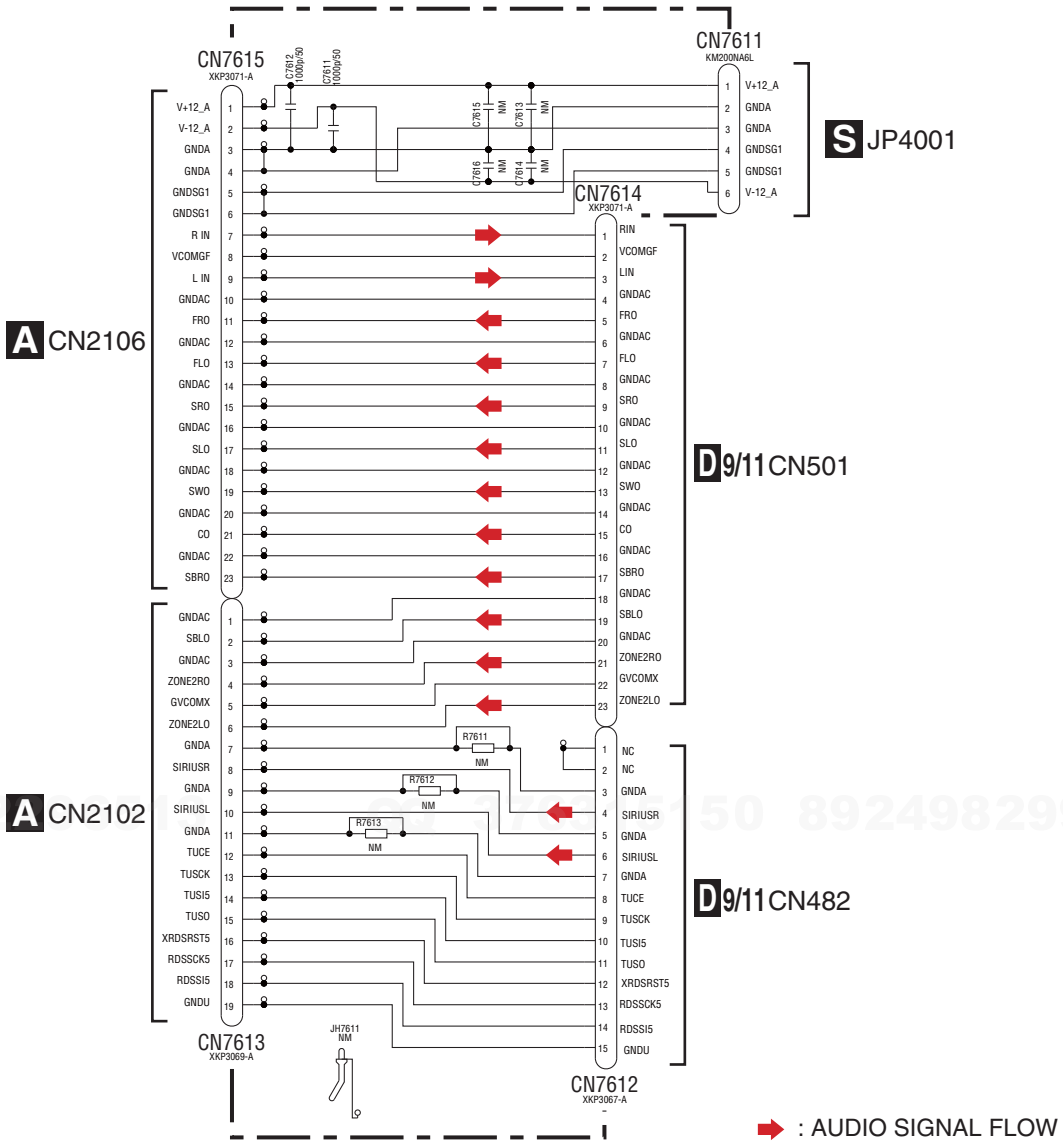

NM : No Mount

H BRIDGE 1 ASSY (AWX9348)

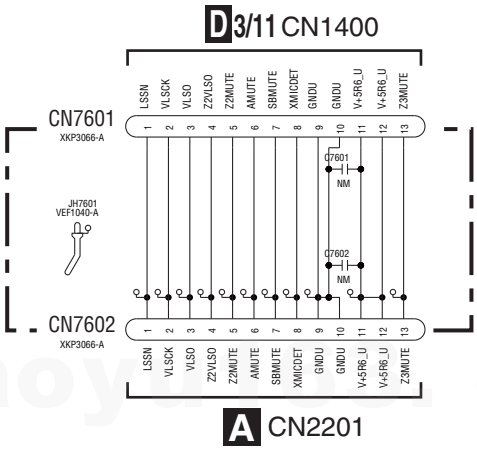

http://www.xiaoyu163.com

http://www.xiaoyu163.com

10.18 BIND 1, BIND 2, BIND 3, BIND 4 AND BIND 5 ASSYS

I BIND 1 ASSY (AWX9412)

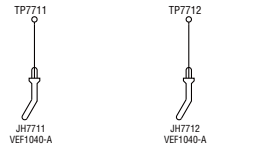

J BIND 2 ASSY (AWX9413)

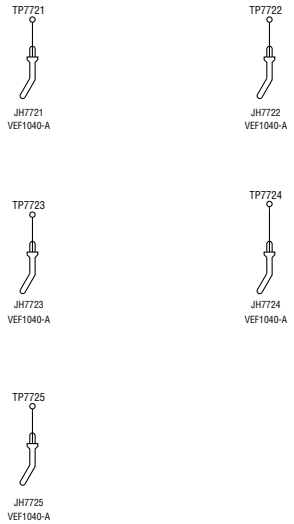

K BIND 3 ASSY (AWX9424)

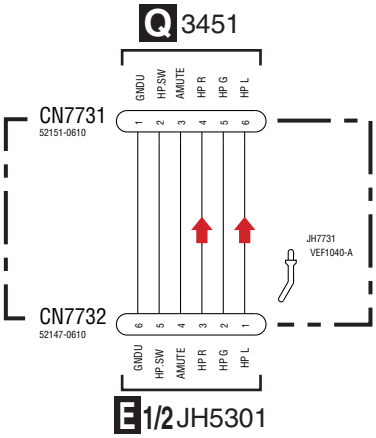

L BIND 4 ASSY (AWX9428)

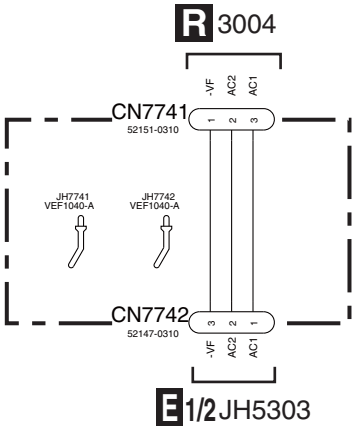

M BIND 5 ASSY (AWX9515)

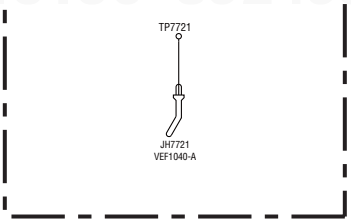

➡ : AUDIO SIGNAL FLOW

The ⚠ mark found on some component parts should be replaced with same parts (safety regulation authorized) of identical designation.

NOTE

1.RESISTORS
Unit: k-kΩ, M-MΩ or Ω unless otherwise noted.
Rated power: 1/10W unless otherwise noted.
Tolerance: (J) ±5% unless otherwise noted.

2.CAPACITORS
Unit: p-pF or uF unless otherwise noted.
Ratings: Capacity(uF)/Voltage(V) unless otherwise noted.

http://www.xiaoyu163.com

http://www.xiaoyu163.com

QQ 376315150 892498299

TEL 13942296513 QQ 376315150 892498299

www. xiaoyu163. com

http://www.xiaoyu163.com

http://www.xiaoyu163.com

10.19 V6 FRONT INPUT, V6 JOG, V6 POWER SW AND V6 H.P ASSYS

N V6 FRONT INPUT ASSY (XWZ4385)

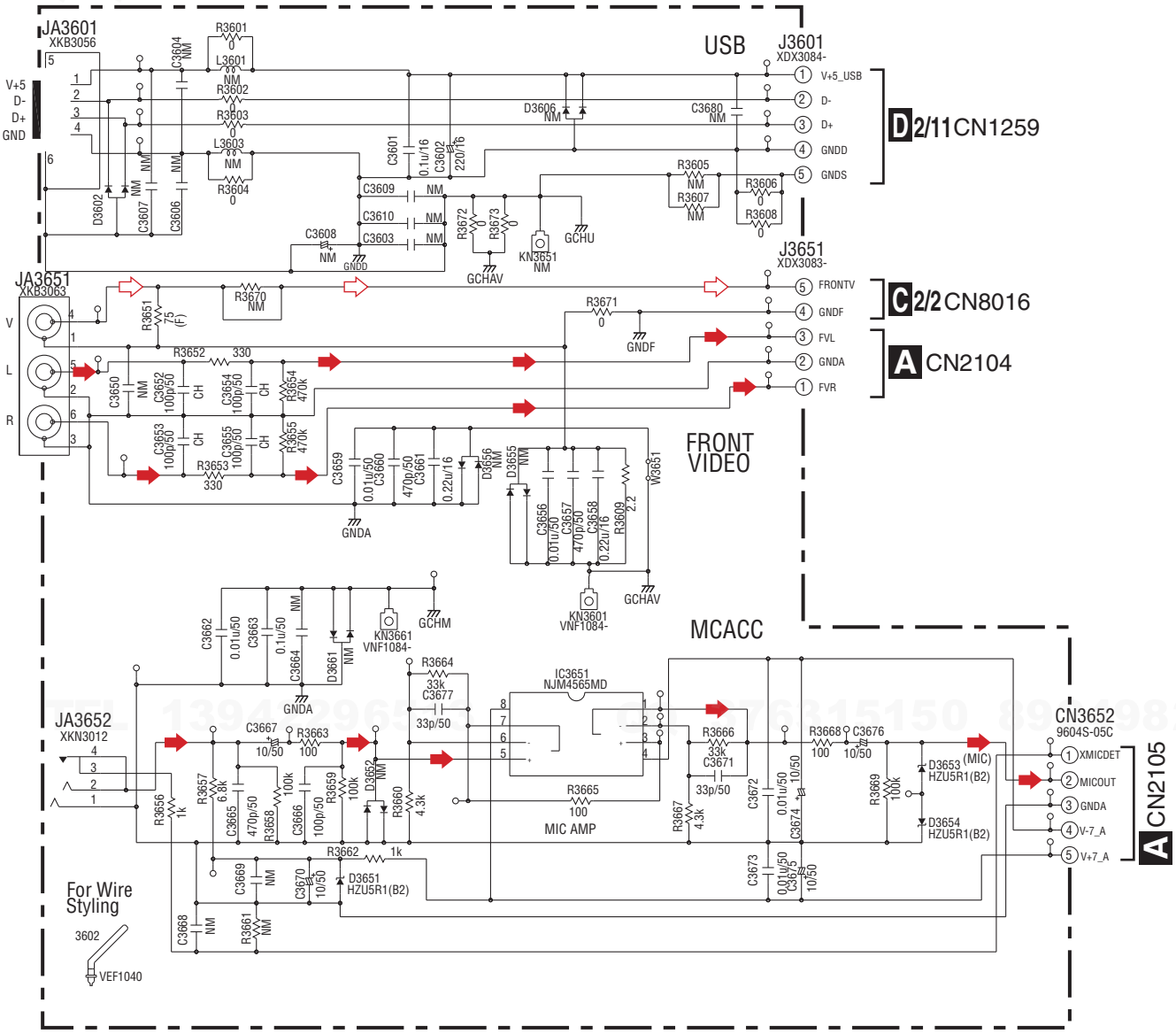

O V6 JOG ASSY (XWZ4384)

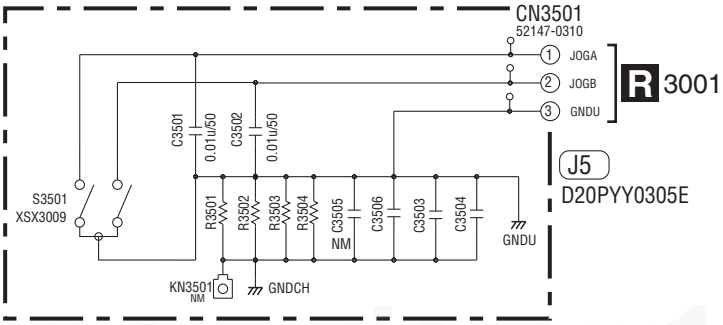

http://www.xiaoyu163.com

http://www.xiaoyu163.com

P V6 POWER SW ASSY (XWZ4383)

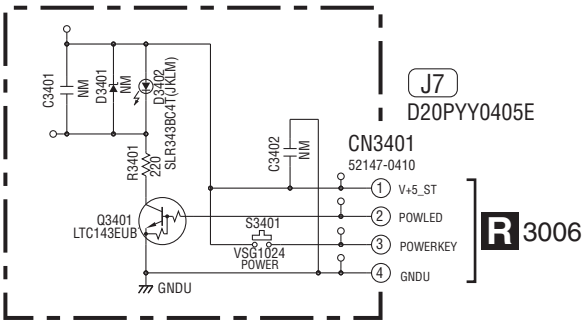

Q V6 H.P ASSY (XWZ4391)

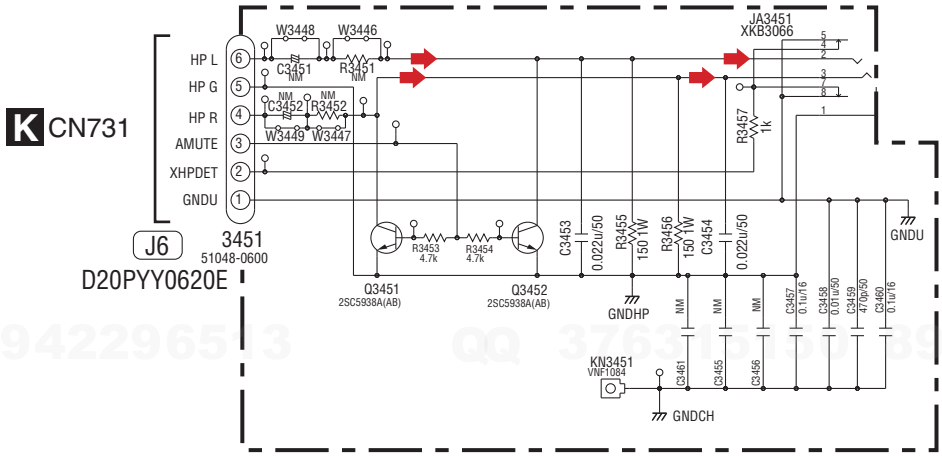

A CN2105

The ⚠ mark found on some component parts should be replaced with same parts (safety regulation authorized) of identical designation.

NOTE

1.RESISTORS
Unit: k-kΩ, M-MΩ or Ω unless otherwise noted.
Rated power: 1/10W unless otherwise noted.
Tolerance: (J) ±5% unless otherwise noted.

2.CAPACITORS
Unit: p-pF or uF unless otherwise noted.
Ratings: Capacity(uF)/Voltage(V) unless otherwise noted.
Rated Voltage: 50V except for electrolytic capacitors.

3.NM : No Mount

➡ : AUDIO SIGNAL FLOW
⇨ : VIDEO SIGNAL FLOW

www.xiaoyu163.com

http://www.xiaoyu163.com

http://www.xiaoyu163.com

10.20 V6 DISPLAY ASSY

R V6 DISPLAY ASSY (VSX-1019AH: XWZ4374) (VSX-919AH: XWZ4375)

NOTE
1.RESISTORS
Unit: k-k , M-M or unless otherwise noted.
Rated power: 1/10W unless otherwise noted.
Tolerance: (J) ±5% unless otherwise noted.
2.CAPACITORS
Unit: p-pF or uF unless otherwise noted.
Ratings: Capacity(uF)/Voltage(V) unless otherwise noted.
Rated Voltage: 50V except for electrolytic capacitors.
3.TACT SWITCHES
Indicated in VSG1024
4.NM : No Mount

J3
D20PYY0320E
L CN7741

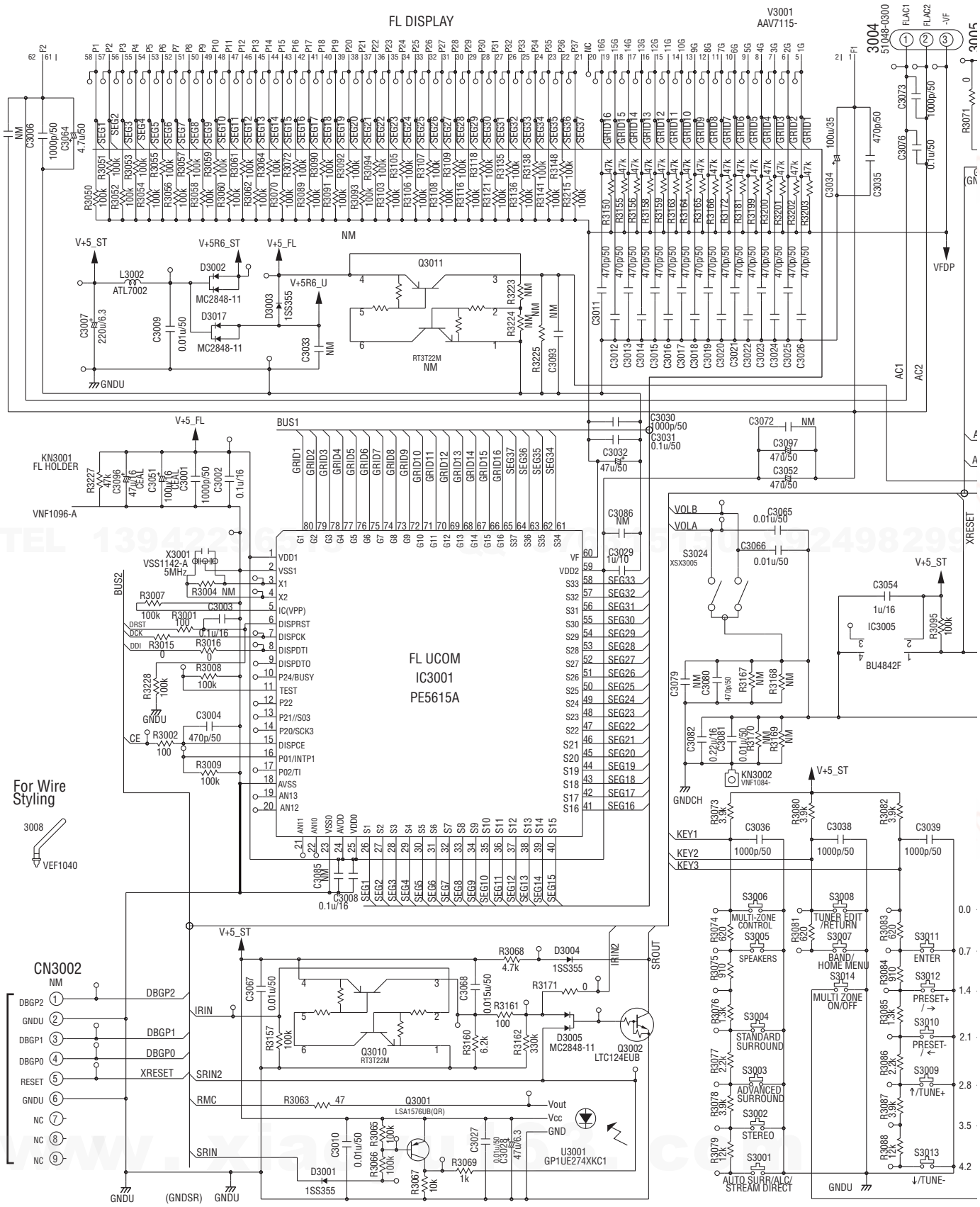

http://www.xiaoyu163.com

http://www.xiaoyu163.com

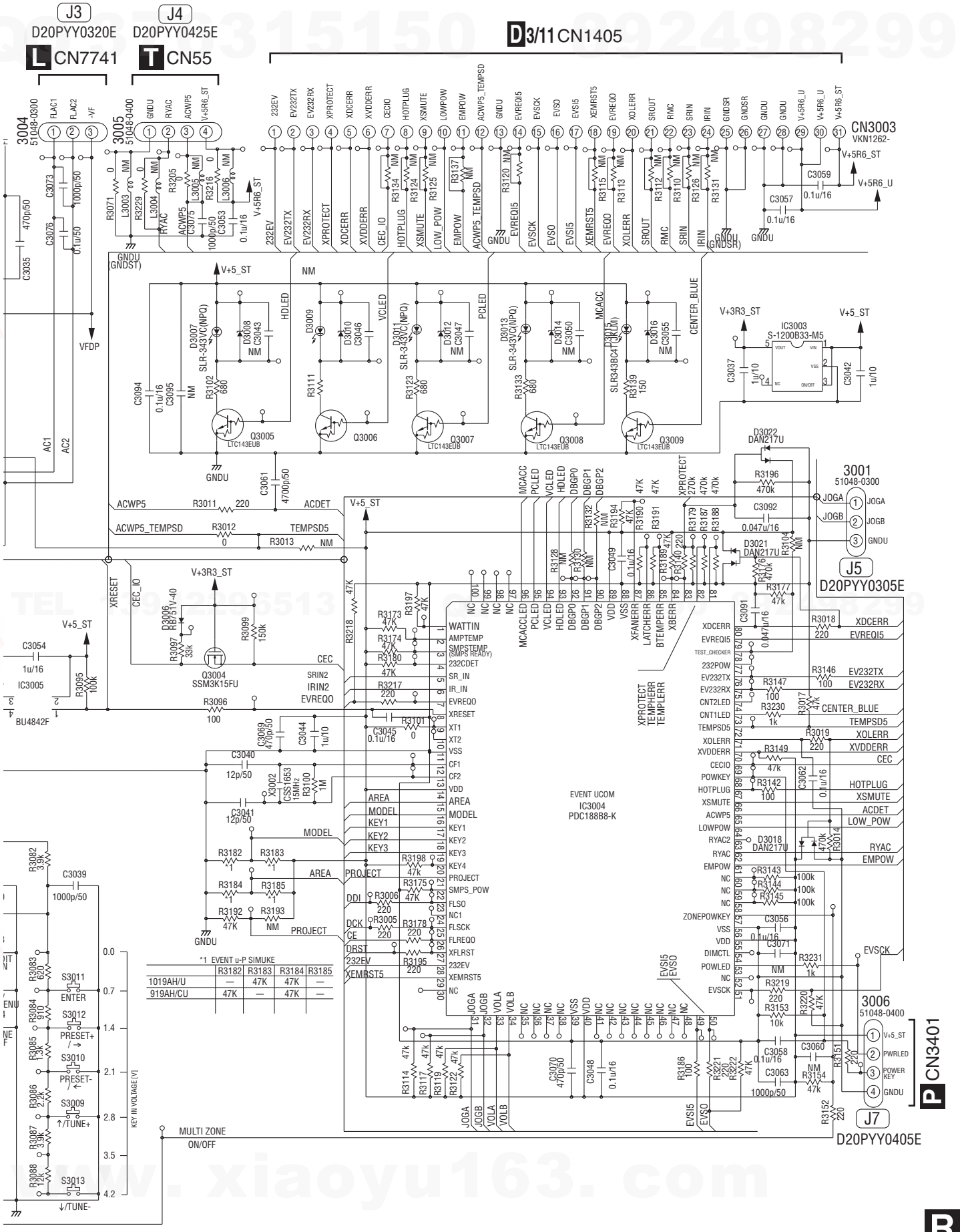

http://www.xiaoyu163.com

http://www.xiaoyu163.com

10.21 REGULATOR, V6 PRIMARY AND V6 TRANS 1 ASSYS

S REGULATOR ASSY (AWX9341)

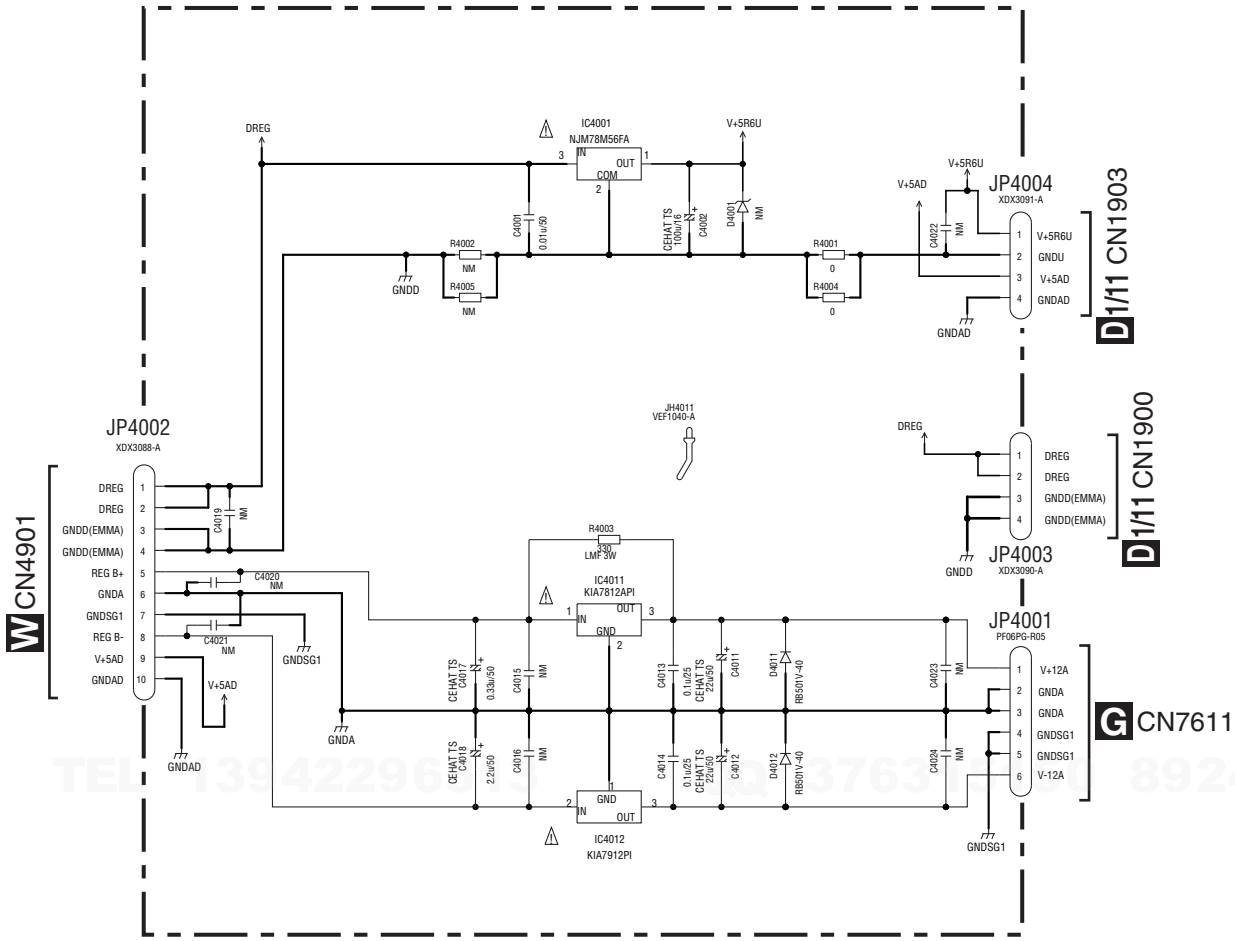

NM : No Mount

QQ 15150 892498299
TEL 13942296513 QQ 376315150 892498299
www.xiaoyu163.com

http://www.xiaoyu163.com

http://www.xiaoyu163.com

T V6 PRIMARY ASSY (XWZ4387)

U V6 TRANS 1 ASSY (XWZ4392)

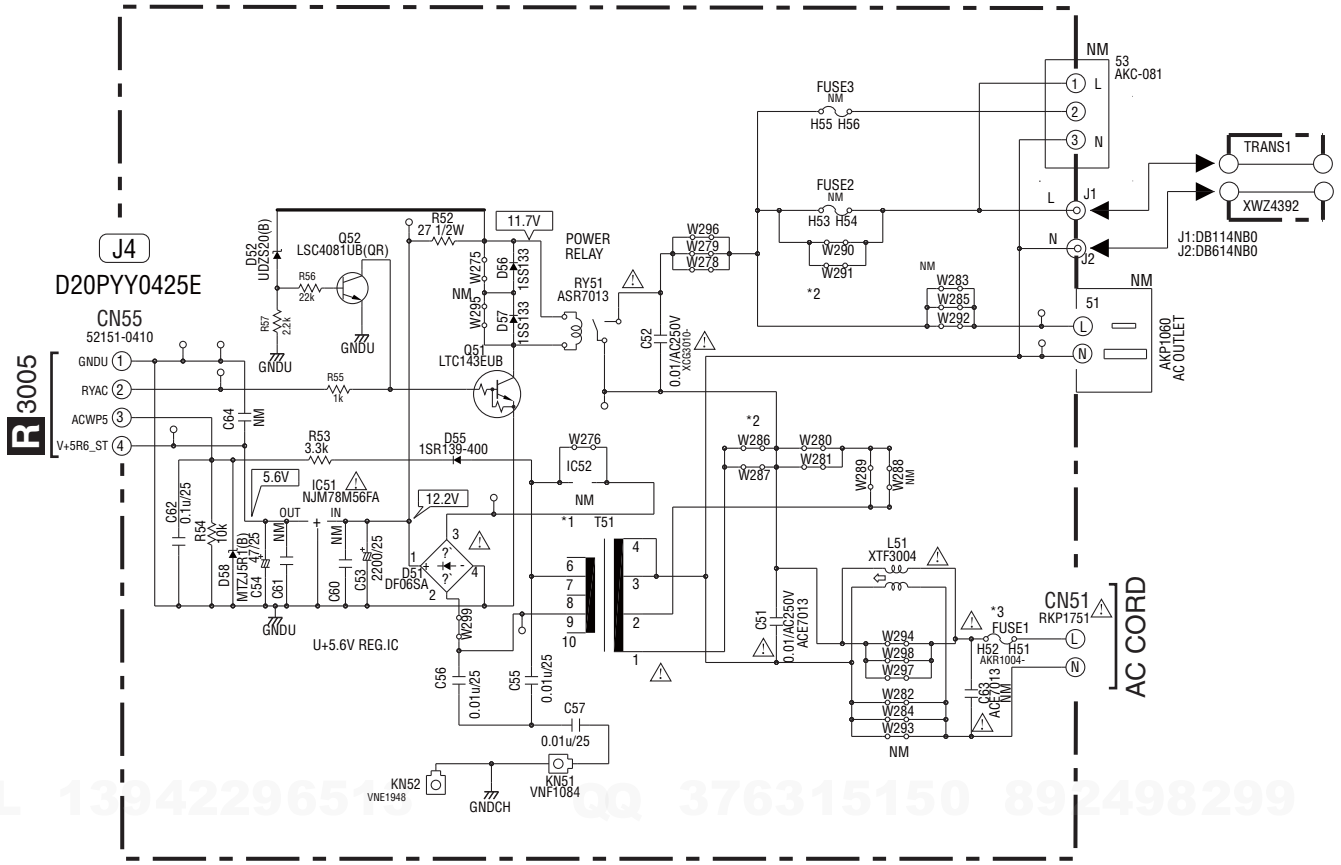

*1

DESTINATION	SUB TRANSFORMER T51
/U,/CU	ATT7108

*2

	/U,/CU
W280 W281	X
W286 W287	○
W290 W291	○

*3

	/U,/CU
FUSE1	REK1154

• NOTE FOR FUSE REPLACEMENT

CAUTION - FOR CONTINUED PROTECTION AGAINST RISK OF FIRE, REPLACE WITH SAME TYPE AND RATINGS OF FUSE.

The ⚠ mark found on some component parts should be replaced with same parts (safety regulation authorized) of identical designation.

NOTE

1.RESISTORS
Unit: k-kΩ, M-MΩ or Ω unless otherwise noted.
Rated power: 1/10W unless otherwise noted.
Tolerance: (J) ±5% unless otherwise noted.

2.CAPACITORS
Unit: p-pF or uF unless otherwise noted.
Ratings: Capacity(uF)/Voltage(V) unless otherwise noted.

3.NM : No Mount

http://www.xiaoyu163.com

http://www.xiaoyu163.com

10.22 TRANS 2 AND TRANS 3 ASSYS

V TRANS 2 ASSY (AWX9343)

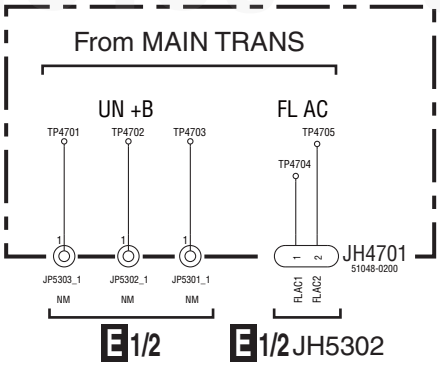

W TRANS 3 ASSY (AWX9344)

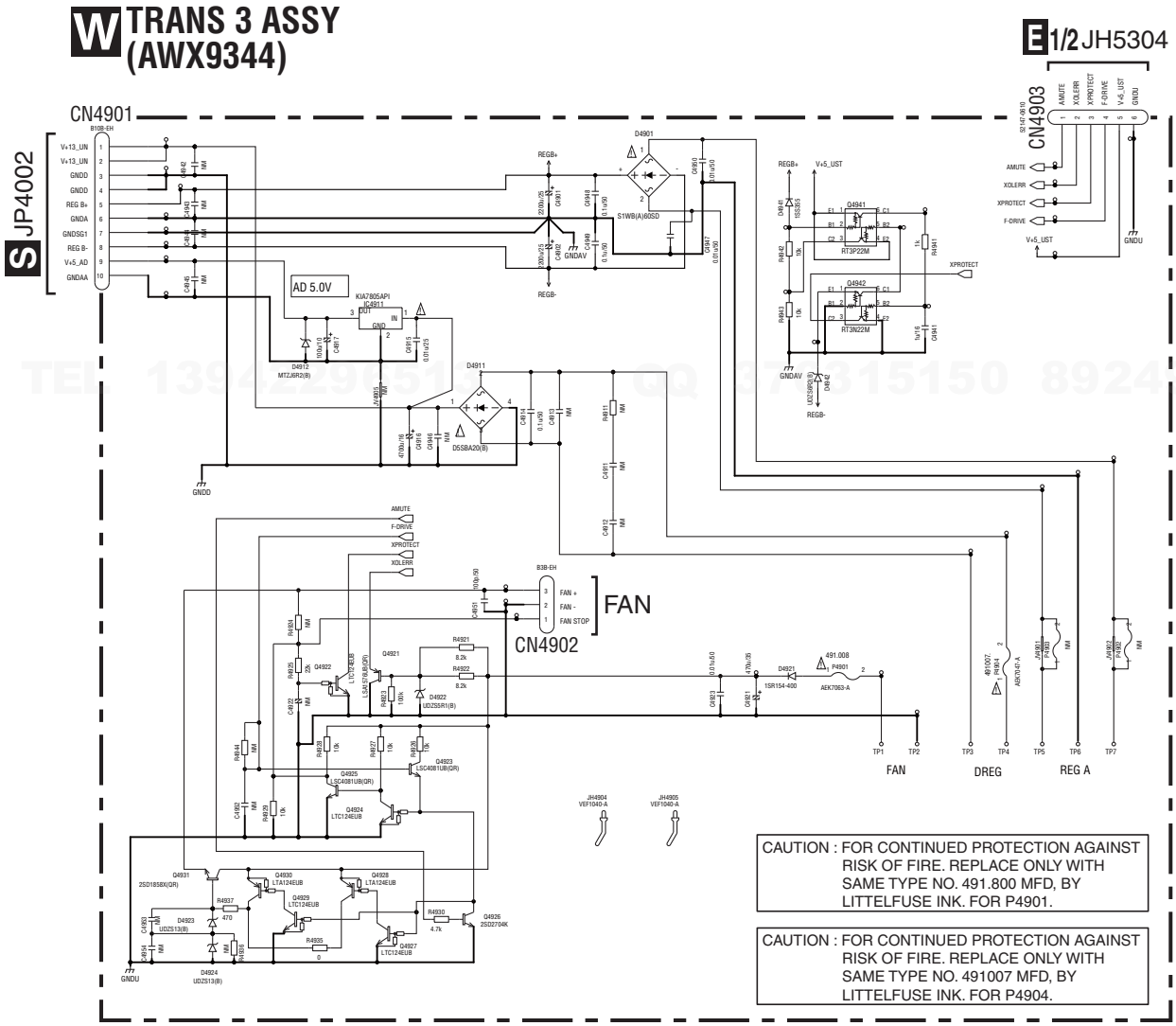

The ⚠ mark found on some component parts should be replaced with same parts (safety regulation authorized) of identical designation.

NM : No Mount

http://www.xiaoyu163.com

http://www.xiaoyu163.com

QQ 376315150 892498299

TEL 13942296513 QQ 376315150 892498299

www. xiaoyu163. com

http://www.xiaoyu163.com

http://www.xiaoyu163.com

11. PCB CONNECTION DIAGRAM

11.1 AUDIO ASSY

SIDE A

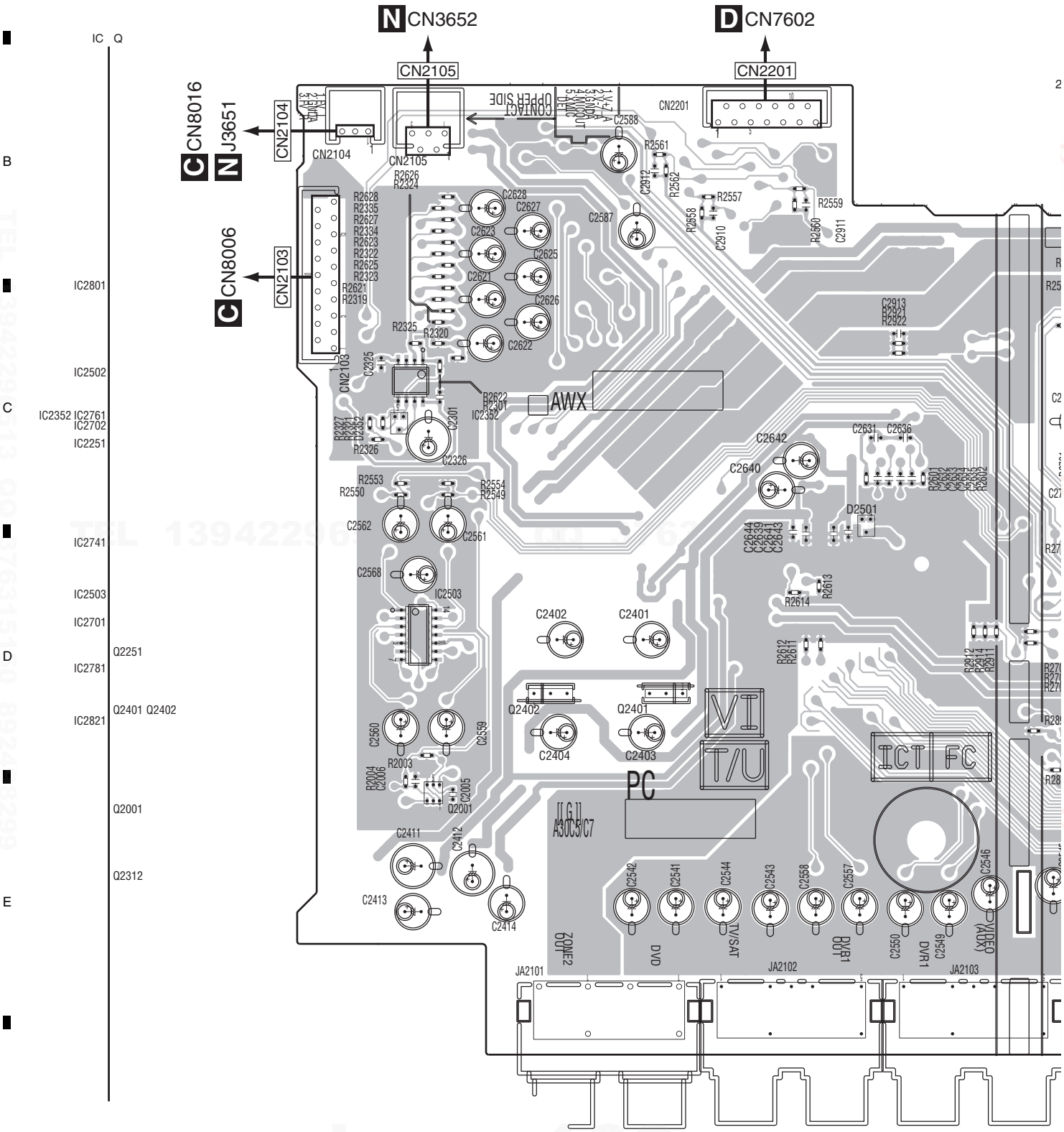

http://www.xiaoyu163.com

http://www.xiaoyu163.com

SIDE A

NOTE FOR PCB DIAGRAMS :

1. The parts mounted on this PCB include all necessary parts for several destinations. For further information for respective destinations, be sure to check with the schematic diagram.

2. View point of PCB diagrams.

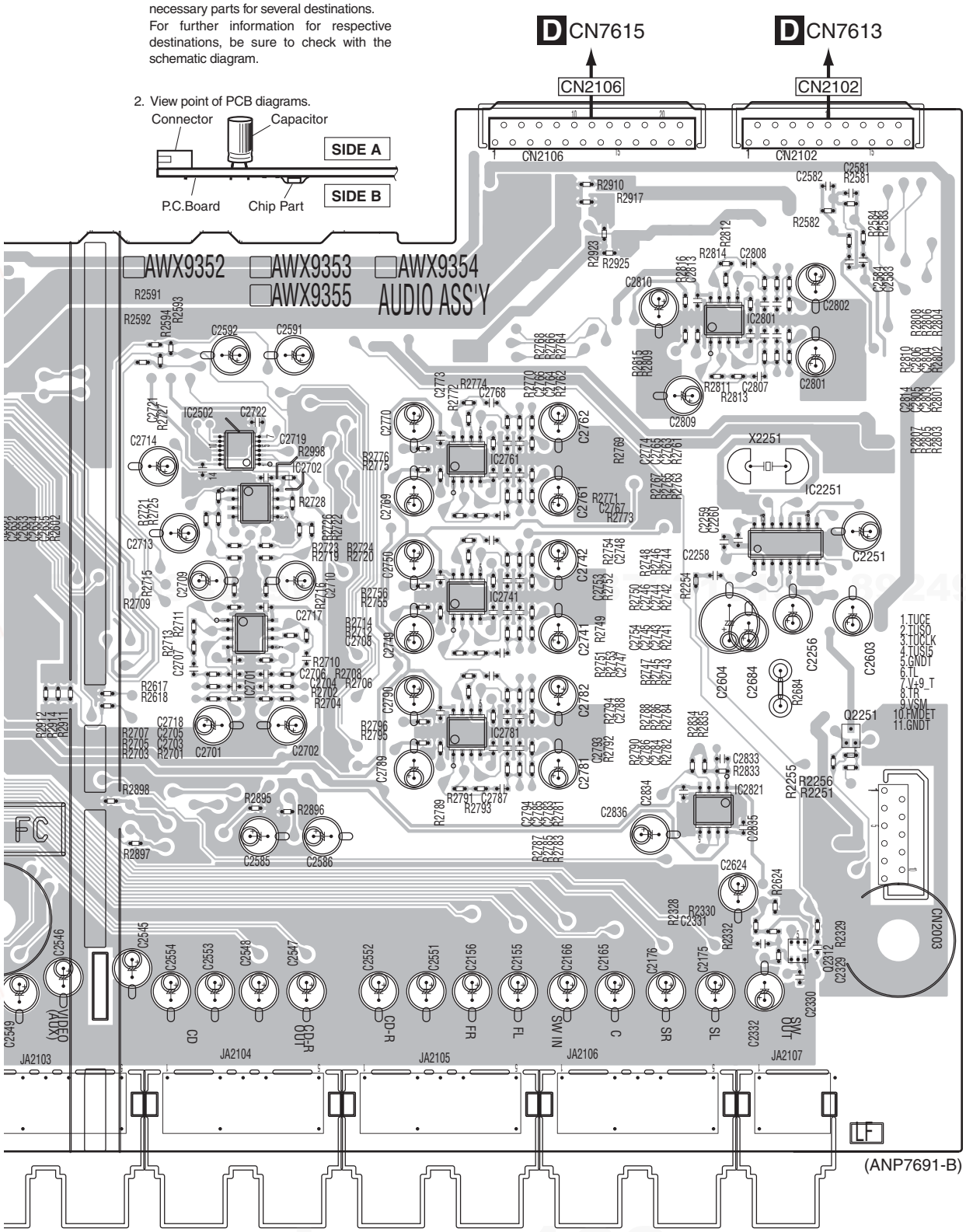

www.xiaoyu163.com

http://www.xiaoyu163.com

http://www.xiaoyu163.com

SIDE B

A AUDIO ASSY

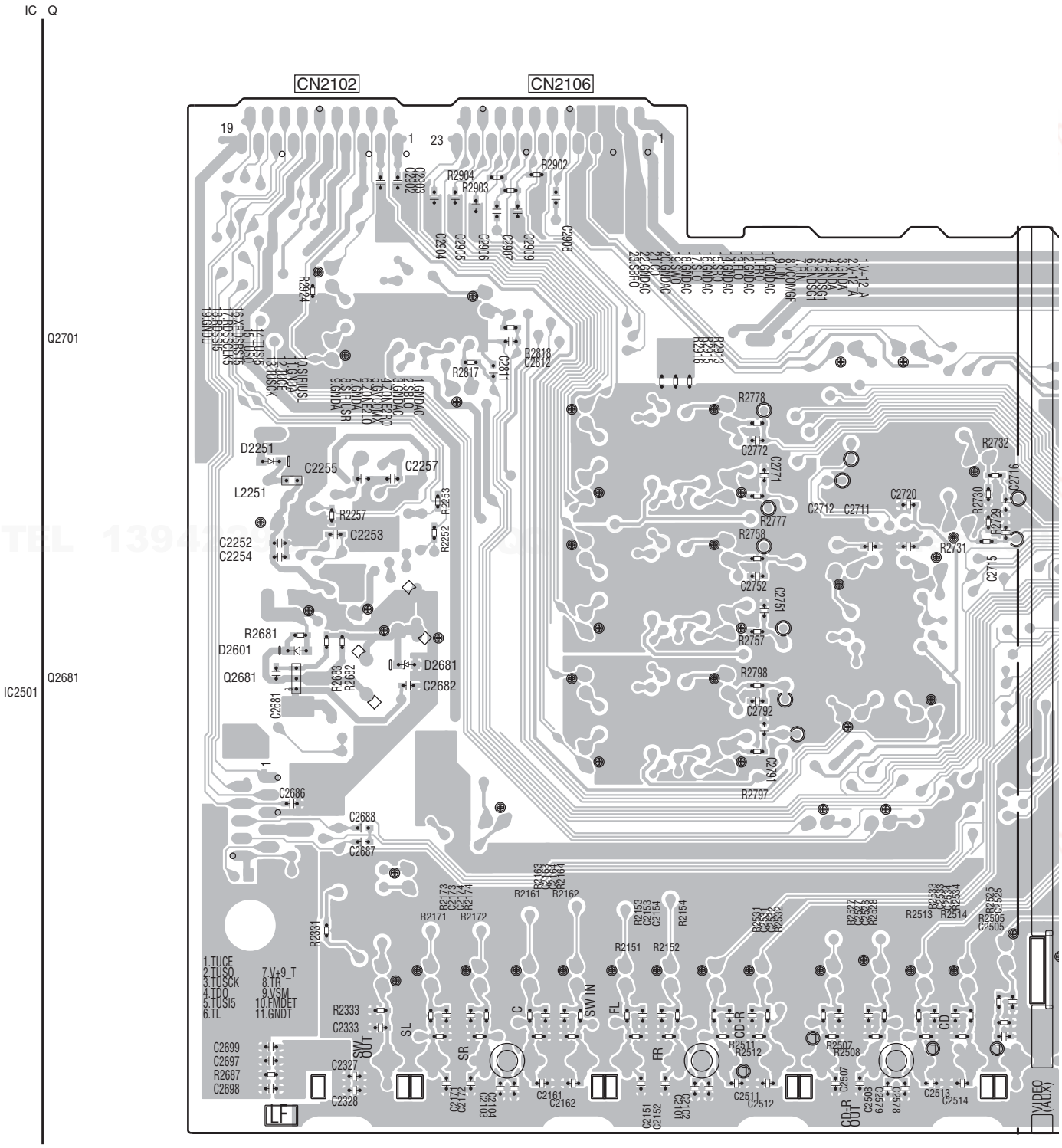

www.xiaoyu163.com

http://www.xiaoyu163.com

http://www.xiaoyu163.com

5 6 7 8

SIDE B

QQ 376315150 892498299

A

B

C

D

E

F

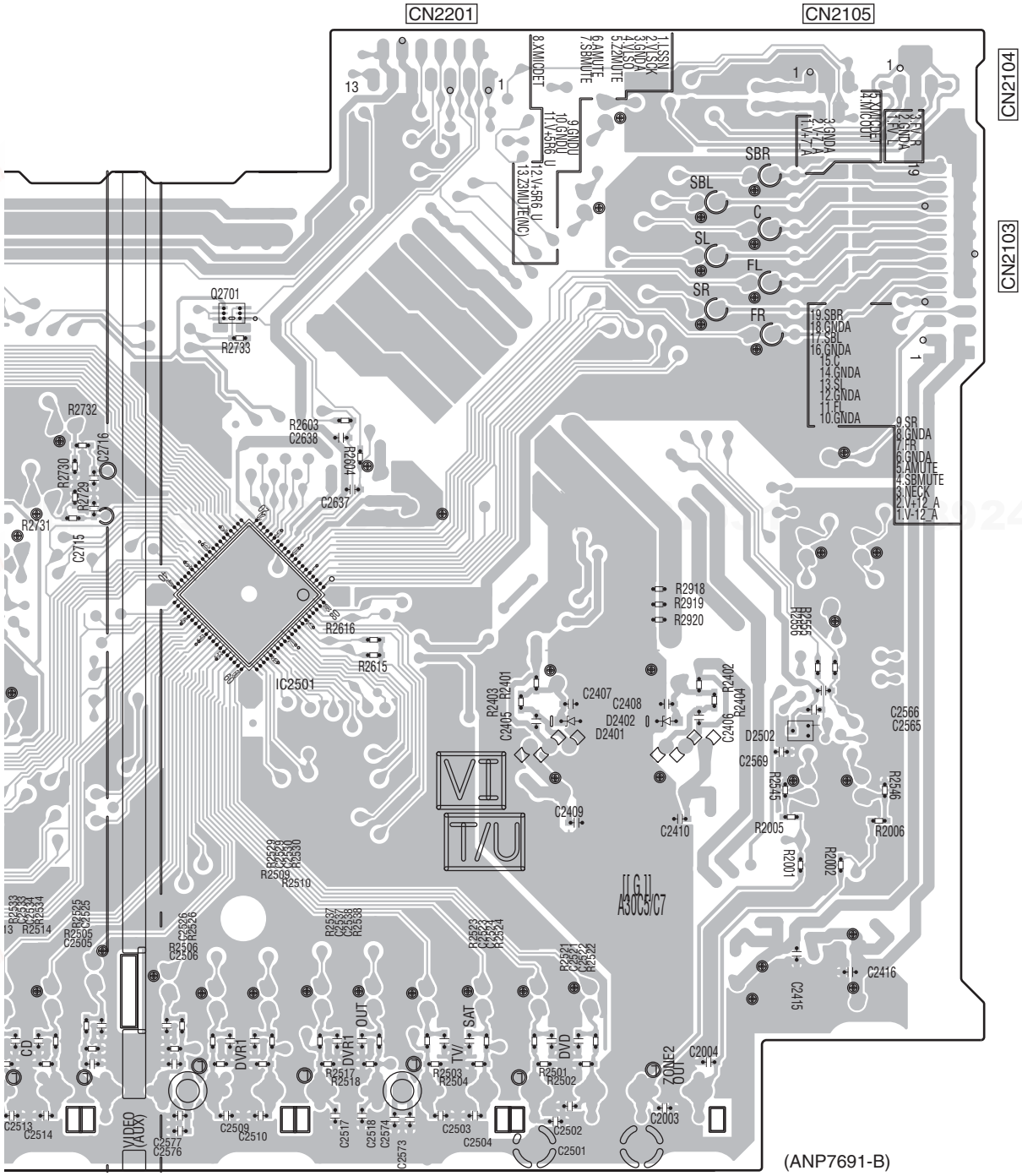

(ANP7691-B)

www.xiaoyu163.com

A

5 6 7 8

http://www.xiaoyu163.com

http://www.xiaoyu163.com

11.2 V6 COMPOSITE AND COMPONENT ASSYS

SIDE A

QQ 376315150 892498299

B V6 COMPOSITE ASSY

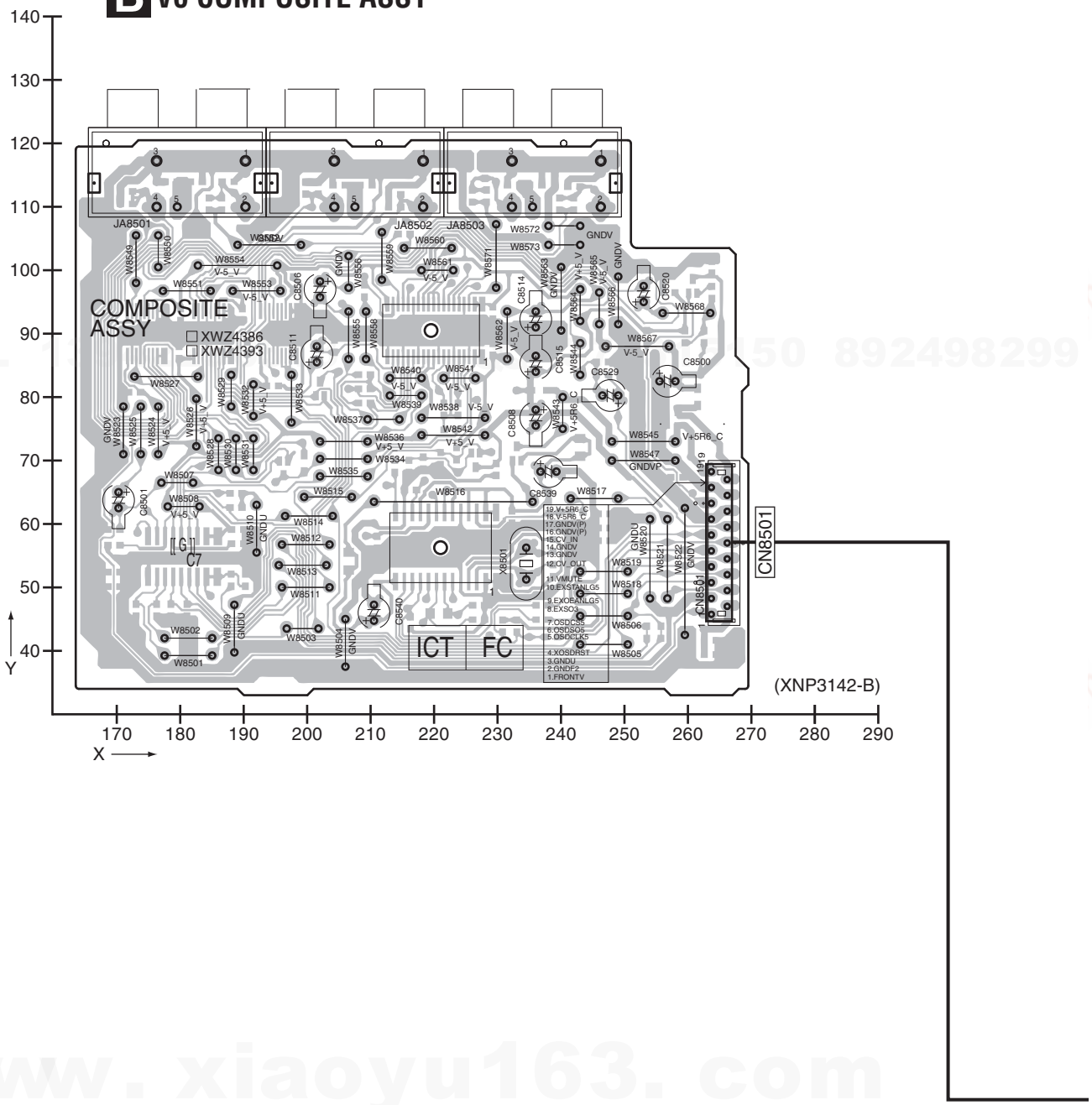

www.xiaoyu163.com

http://www.xiaoyu163.com

http://www.xiaoyu163.com

SIDE A

C COMPONENT ASSY

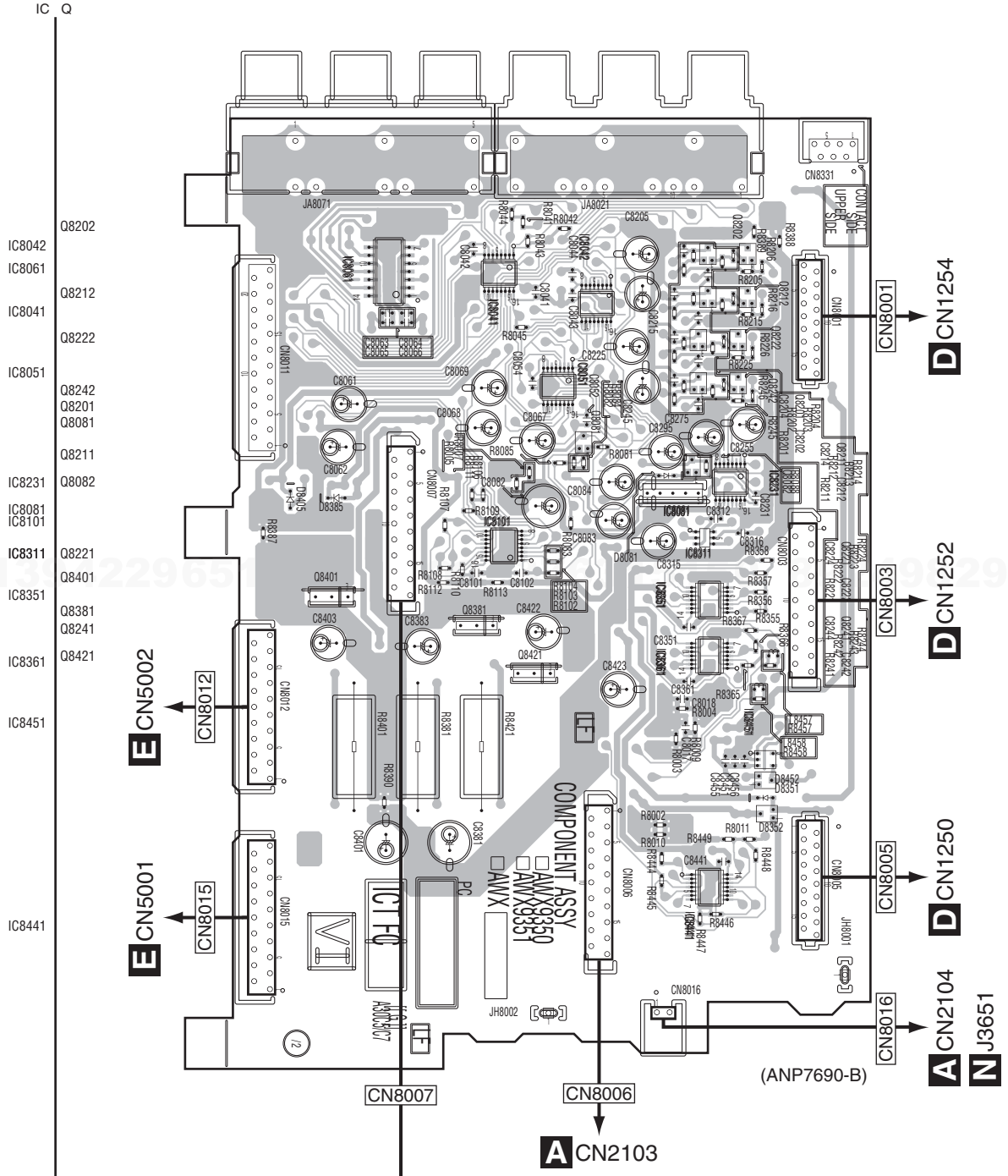

http://www.xiaoyu163.com

http://www.xiaoyu163.com

SIDE B

C COMPONENT ASSY

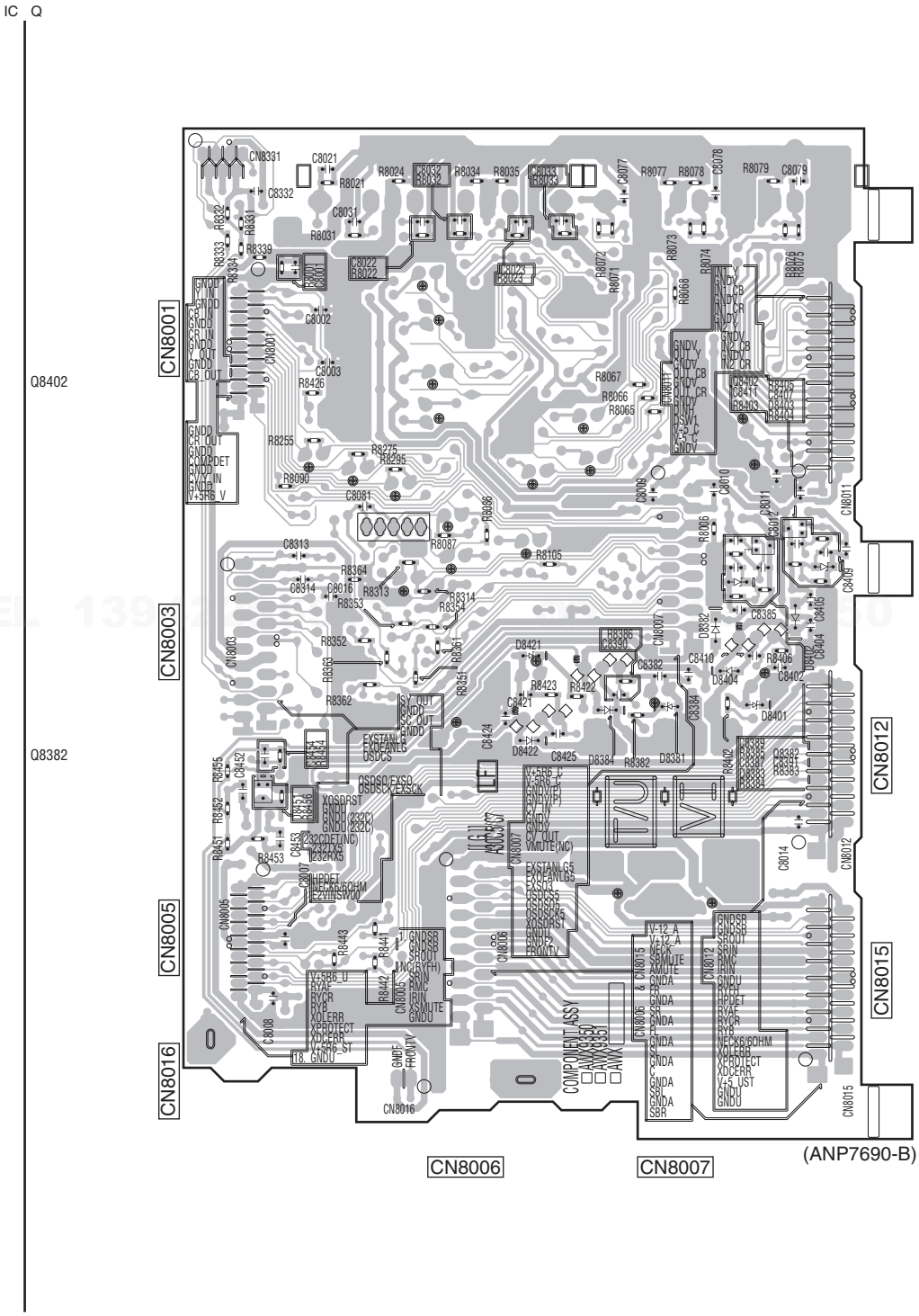

QQ 376315150 892498299
TEL 13942296513 QQ 376315150 892498299
www.xiaoyu163.com

http://www.xiaoyu163.com

http://www.xiaoyu163.com

SIDE B

B V6 COMPOSITE ASSY

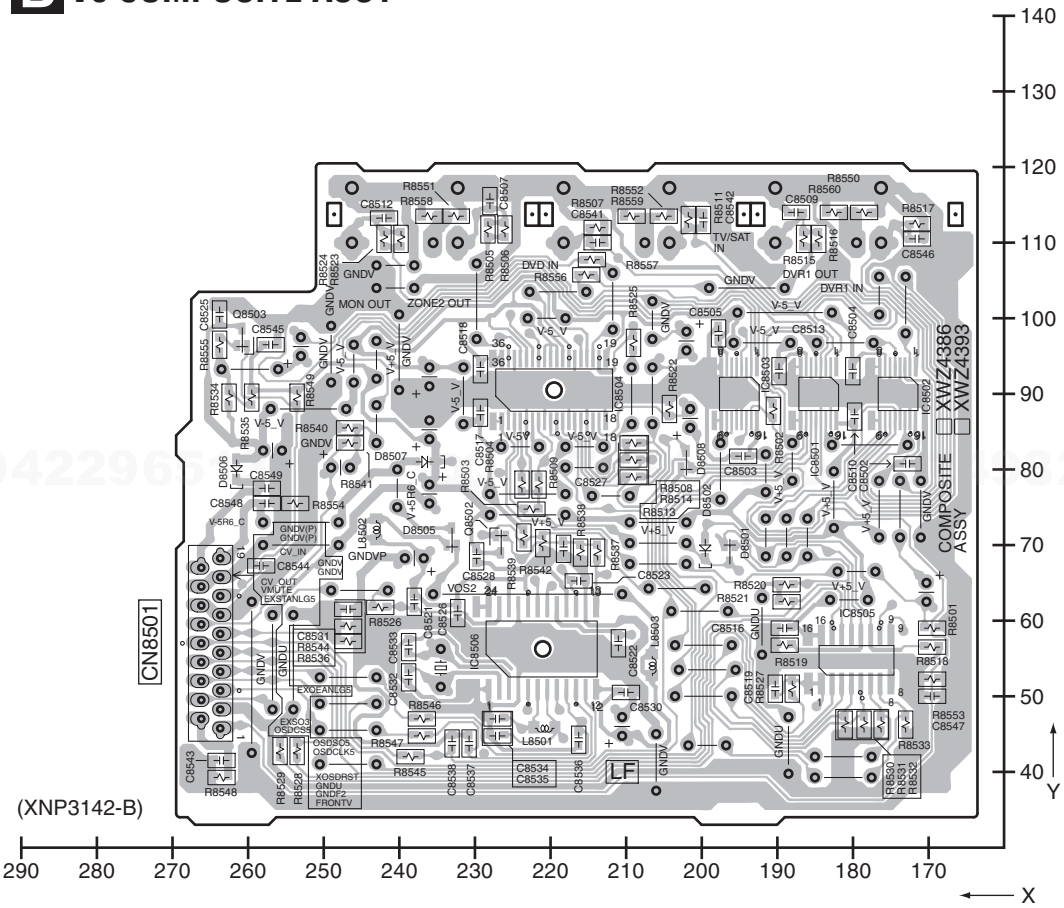

QQ 376315150 892498299
TEL 13942296513 QQ 376315150 892498299
www.xiaoyu163.com

http://www.xiaoyu163.com

http://www.xiaoyu163.com

11.3 DIGITAL MAIN ASSY

SIDE A

D DIGITAL MAIN ASSY

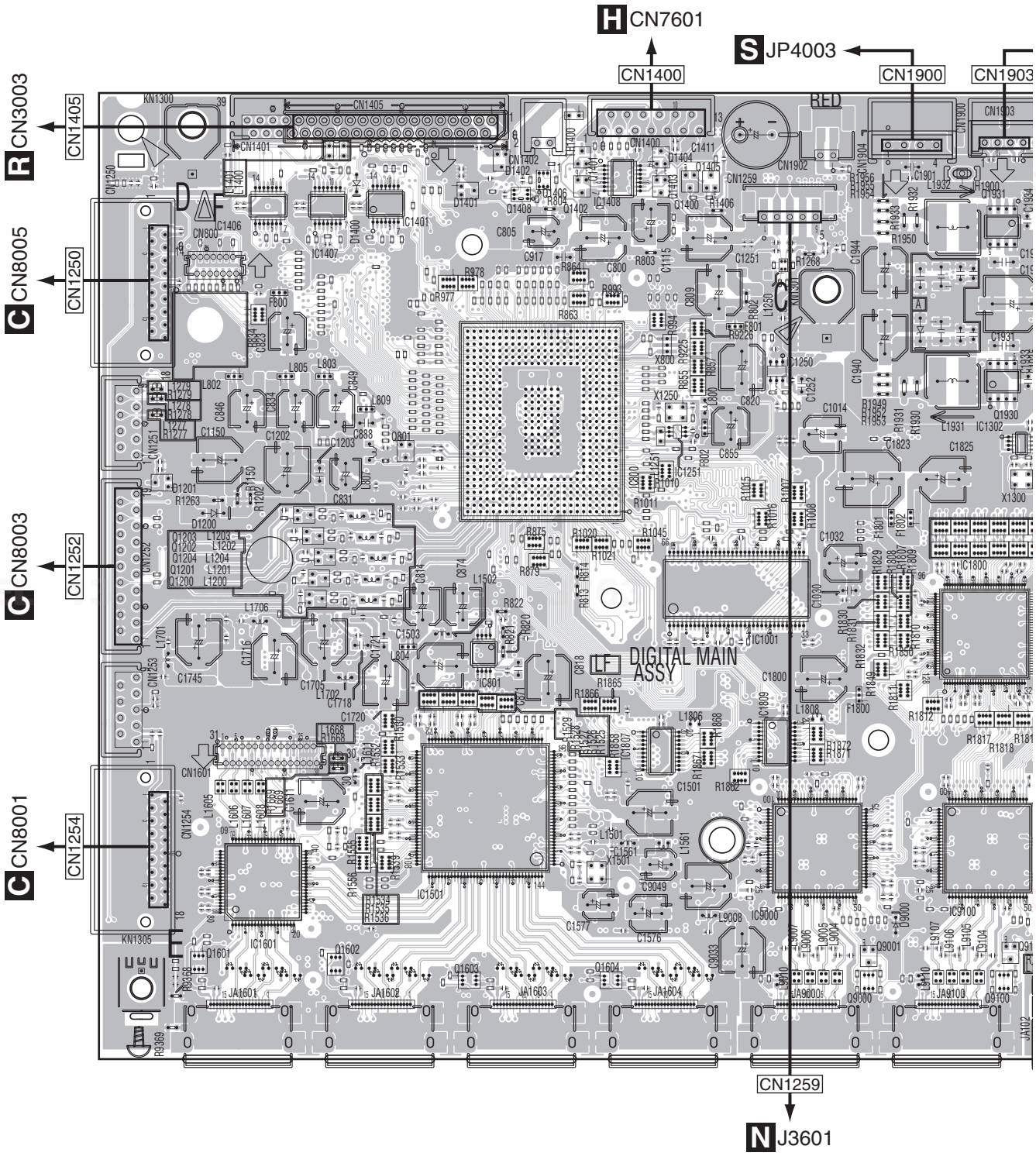

www.xiaoyu163.com

http://www.xiaoyu163.com

http://www.xiaoyu163.com

SIDE A

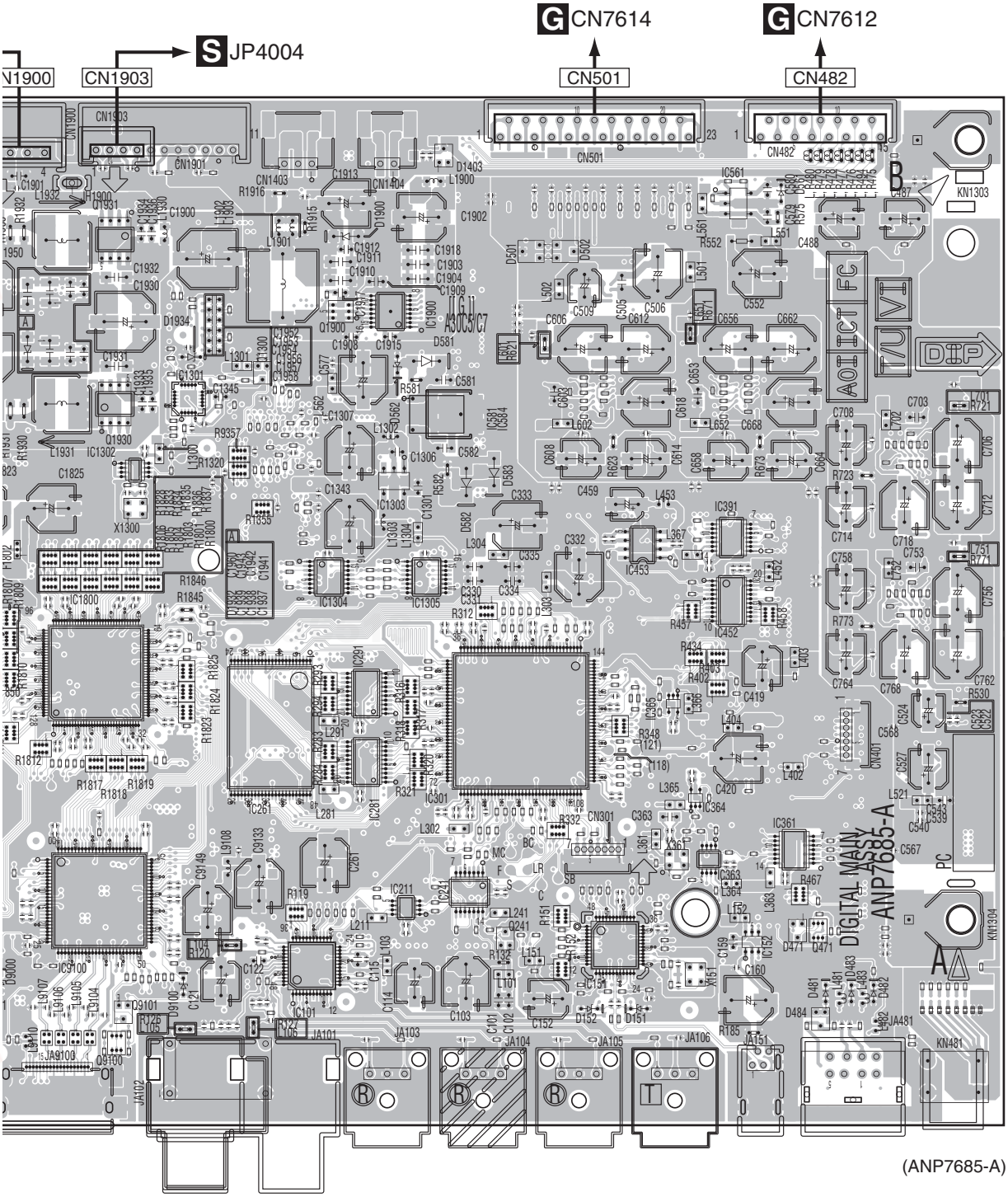

(ANP7685-A)

QQ 376315150 892498299
www.xiaoyu163.com

http://www.xiaoyu163.com

http://www.xiaoyu163.com

SIDE B

D DIGITAL MAIN ASSY

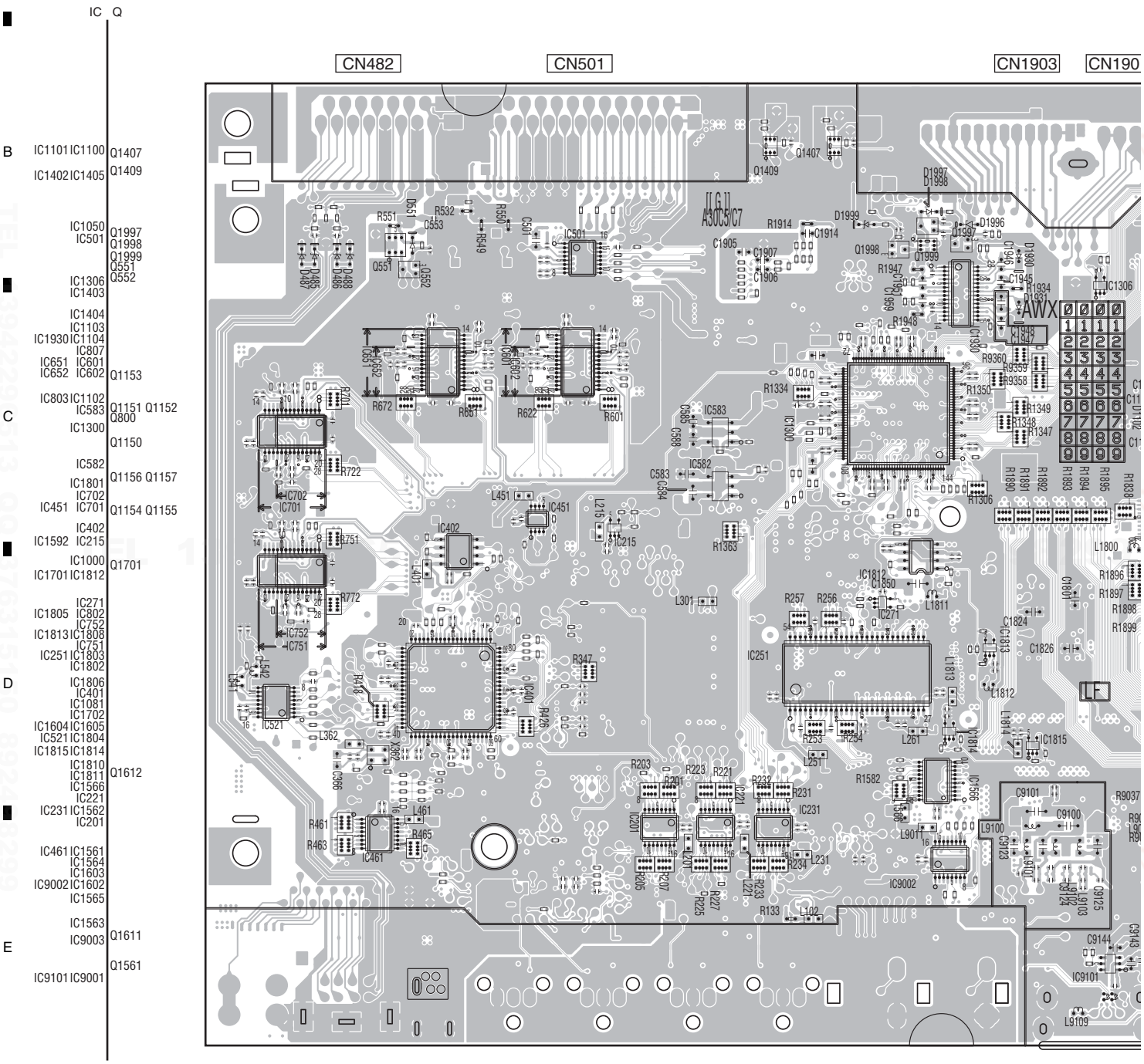

www.xiaoyu163.com

http://www.xiaoyu163.com

http://www.xiaoyu163.com

5 6 7 8

SIDE B

QQ 3763150150 8924998299

A

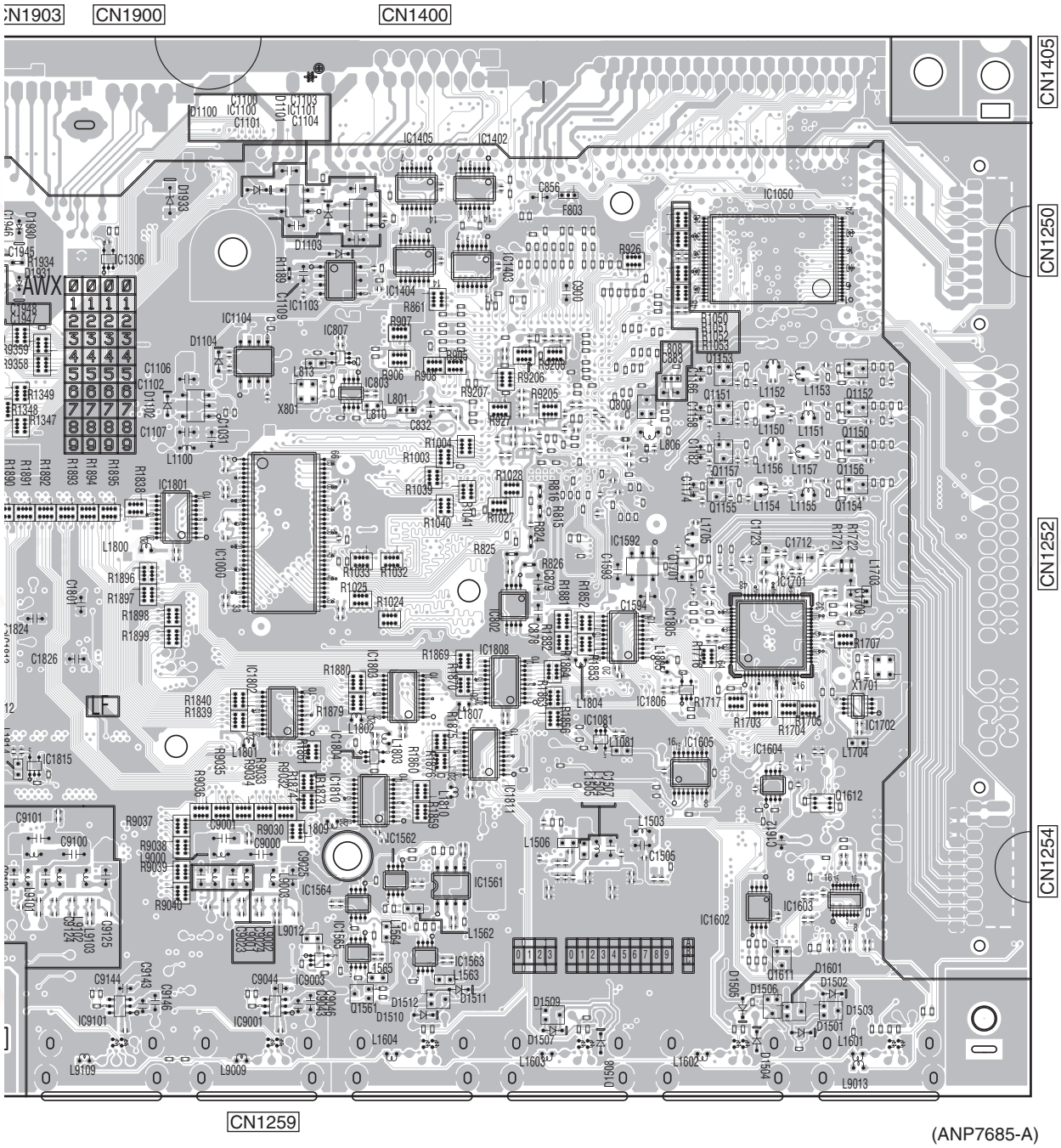

(ANP7685-A)

B C D E F

www.xiaoyu163.com

D

5 6 7 8

http://www.xiaoyu163.com

http://www.xiaoyu163.com

11.4 POWER PACK ASSY

SIDE A

E POWER PACK ASSY

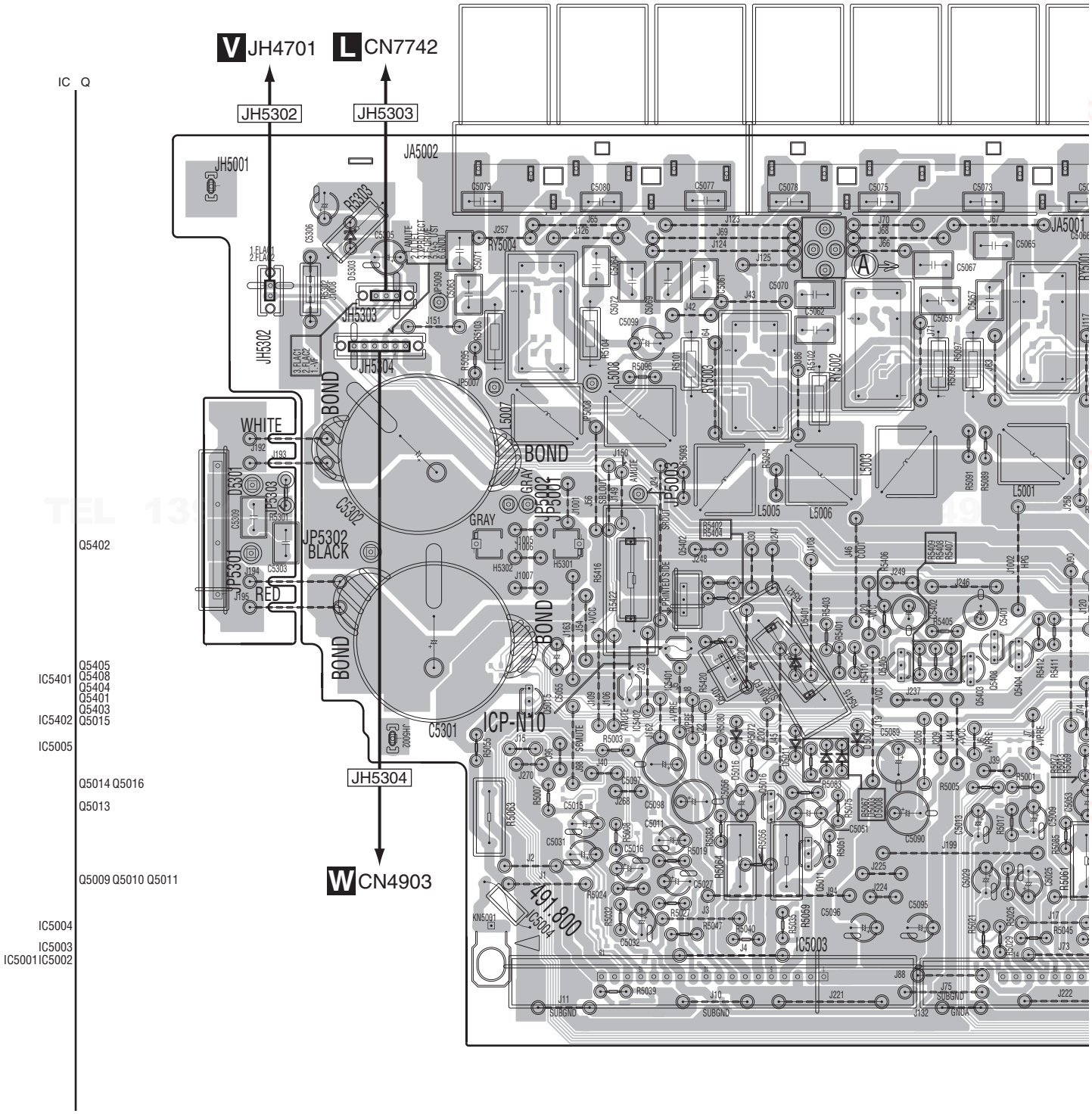

QQ 376315150 892498299
TEL 13949595130
www.xiaoyu163.com

http://www.xiaoyu163.com

http://www.xiaoyu163.com

SIDE A

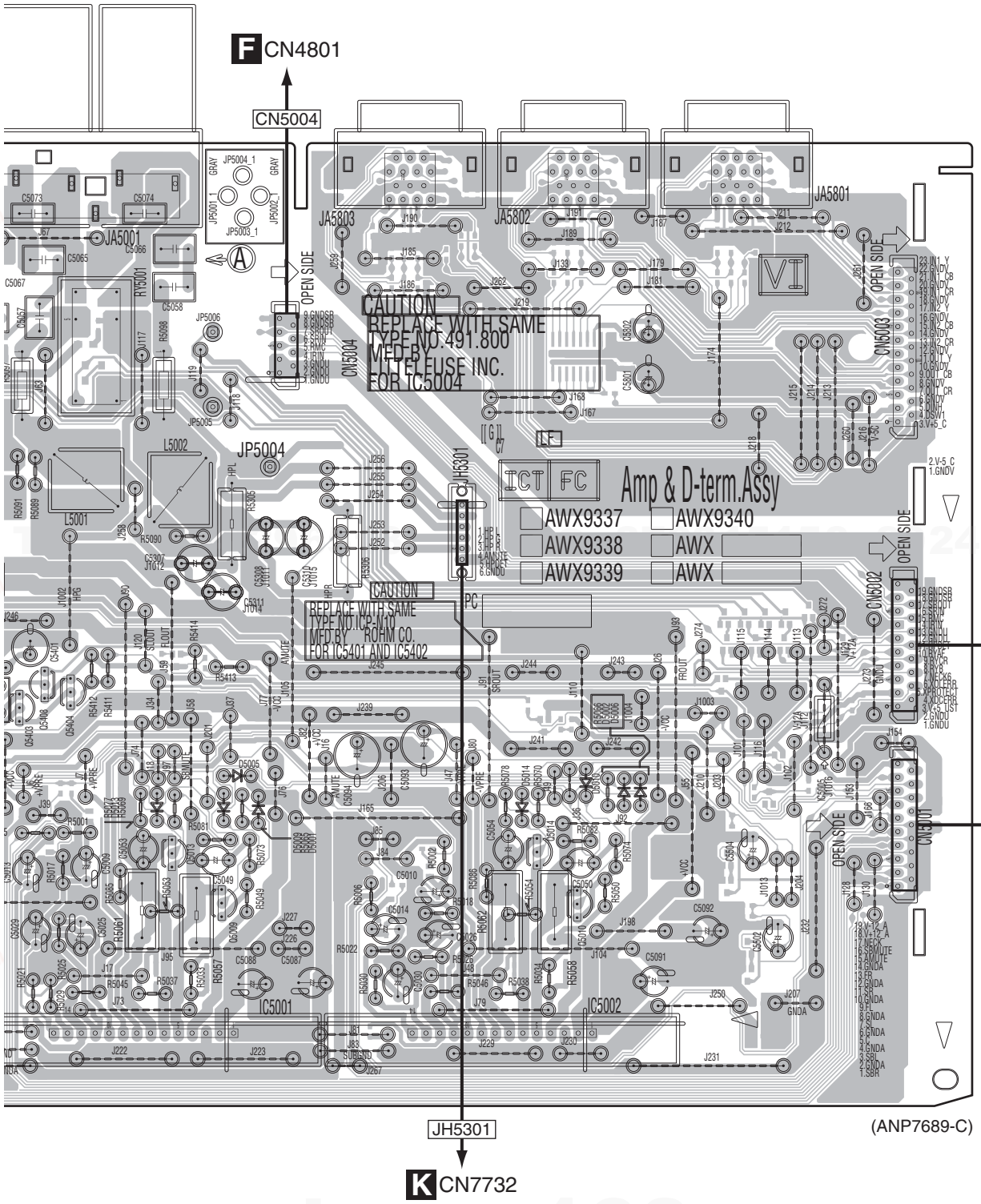

www.xiaoyu163.com

http://www.xiaoyu163.com

http://www.xiaoyu163.com

SIDE B

E POWER PACK ASSY

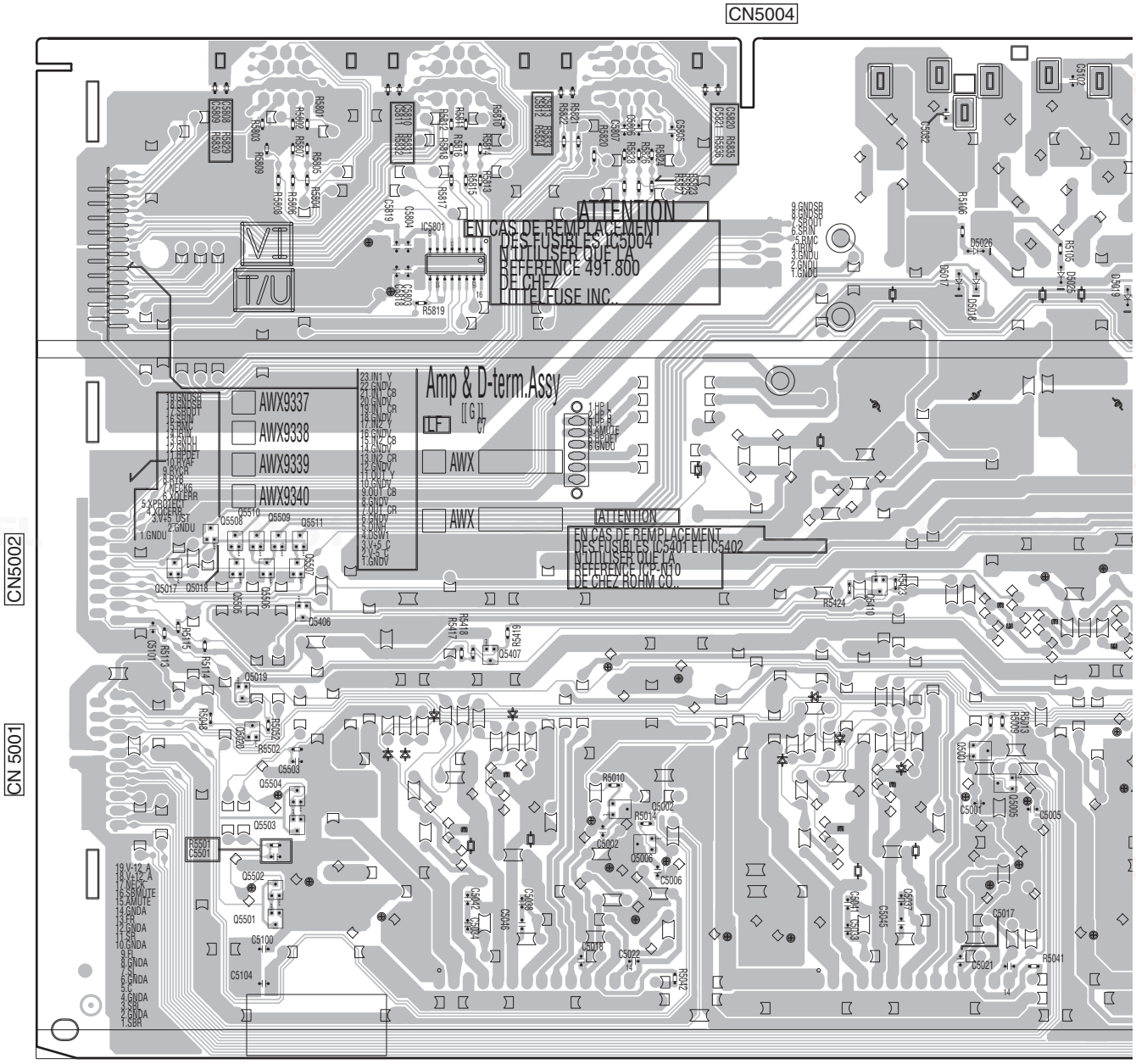

(ANP7689-C)

www.xiaoyu163.com

http://www.xiaoyu163.com

http://www.xiaoyu163.com

5 6 7 8

SIDE B

QQ 376315150 892498299

A

B

C

D

E

F

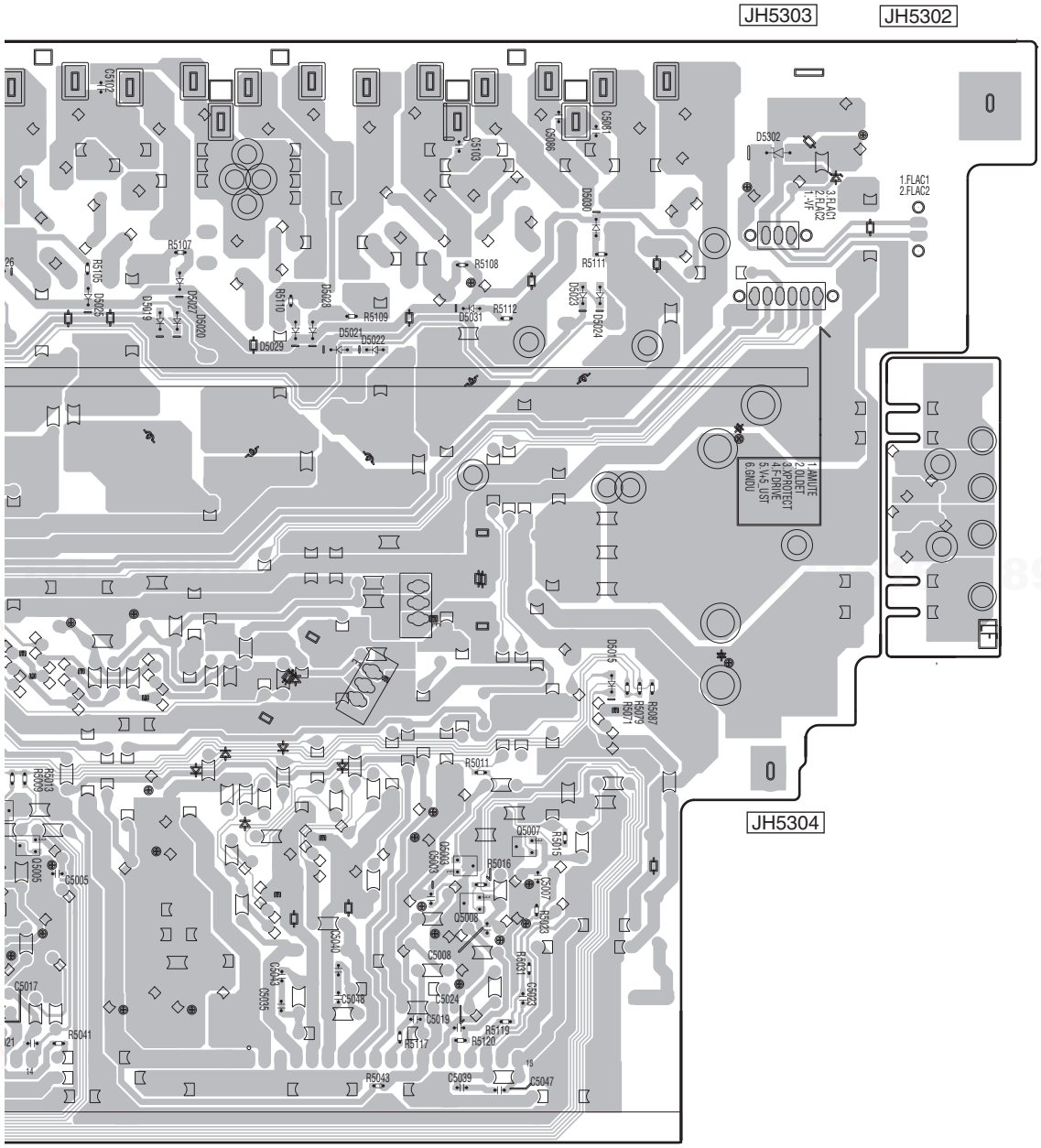

http://www.xiaoyu163.com

11.5 IR/SR, BRIDGE 1 AND BRIDGE 2 ASSYS

SIDE A

SIDE A

QQ 376315150 892498299

F IR/SR ASSY

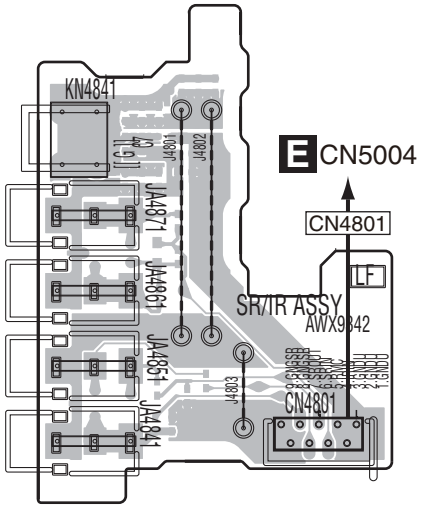

(ANP7689-C)

H BRIDGE 1 ASSY

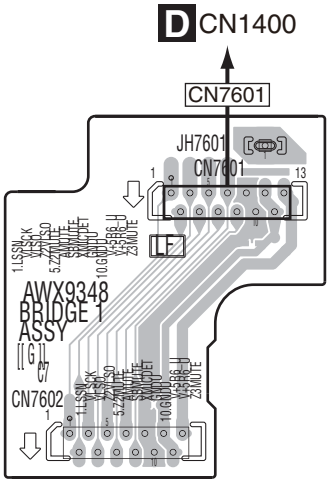

(ANP7689-C)

TEL 13942296513 QQ 376315150 892498299

G BRIDGE 2 ASSY

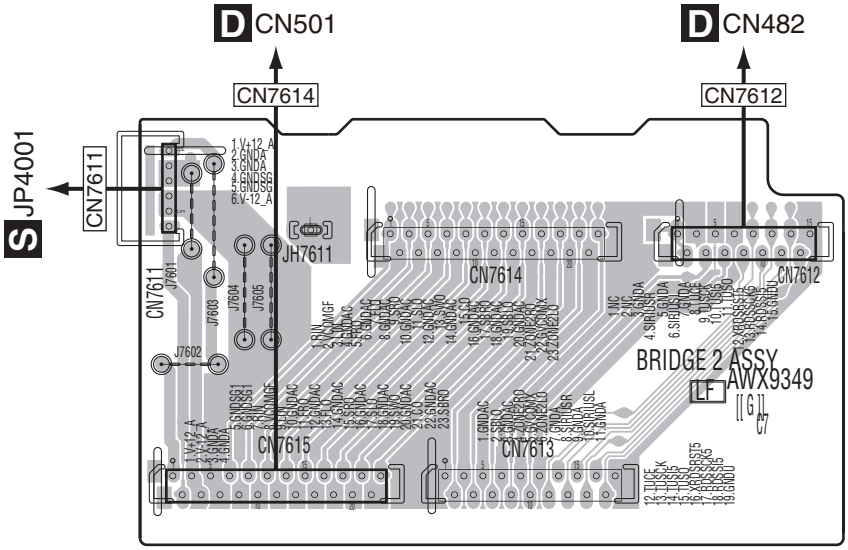

(ANP7689-C)

www.xiaoyu163.com

http://www.xiaoyu163.com

http://www.xiaoyu163.com

SIDE B

SIDE B

H BRIDGE 1 ASSY

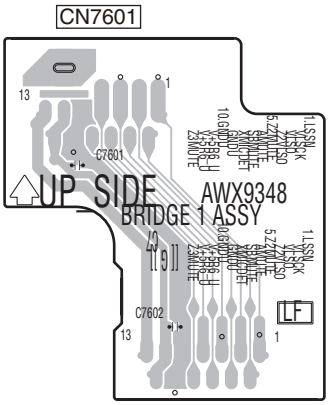

(ANP7689-C)

F IR/SR ASSY

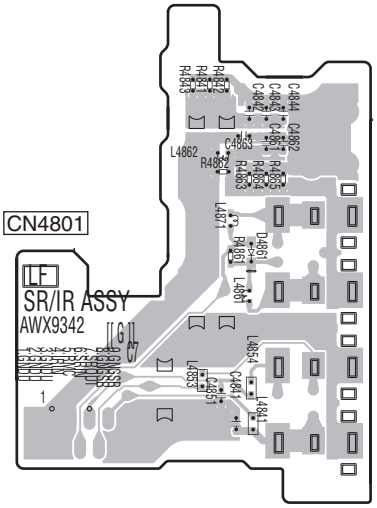

(ANP7689-C)

G BRIDGE 2 ASSY

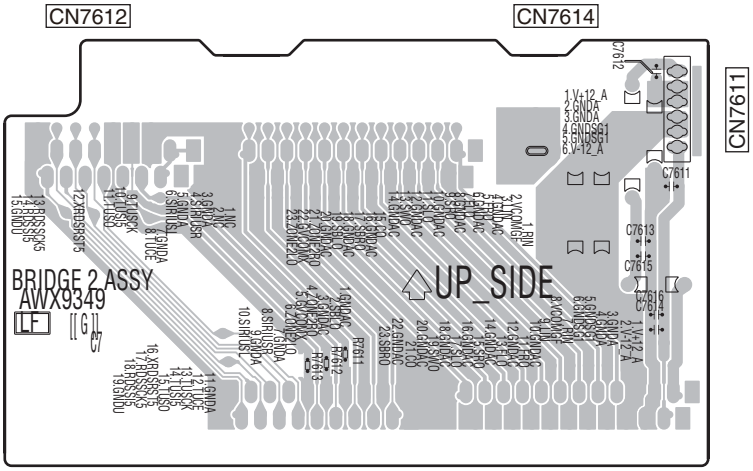

(ANP7689-C)

www.xiaoyu163.com

http://www.xiaoyu163.com

http://www.xiaoyu163.com

11.6 BIND 1, BIND 2, BIND 3, BIND 4 AND BIND 5 ASSYS

SIDE A

SIDE A

I BIND 1 ASSY

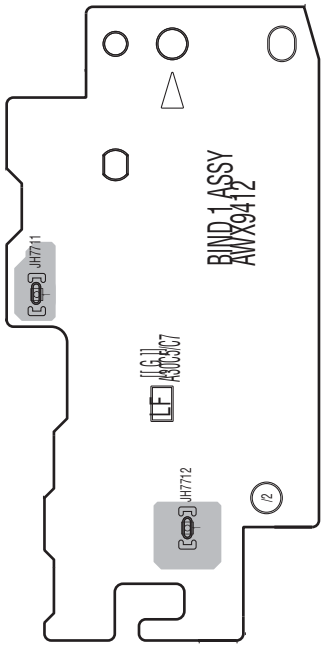

(ANP7690-B)

J BIND 2 ASSY

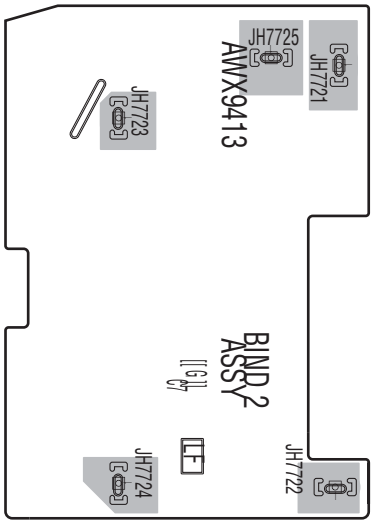

(ANP7689-C)

K BIND 3 ASSY

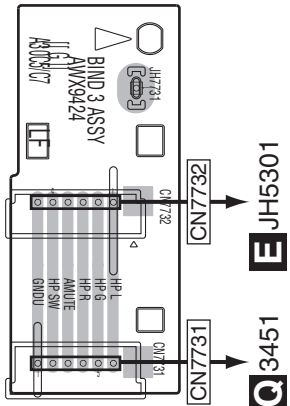

(ANP7691-B)

M BIND 5 ASSY

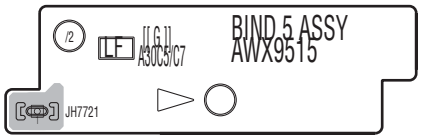

(ANP7690-B)

L BIND 4 ASSY

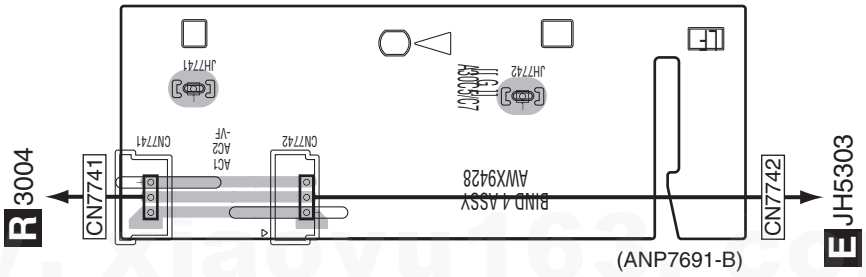

(ANP7691-B)

I J K L M

http://www.xiaoyu163.com

http://www.xiaoyu163.com

SIDE B

J BIND 2 ASSY

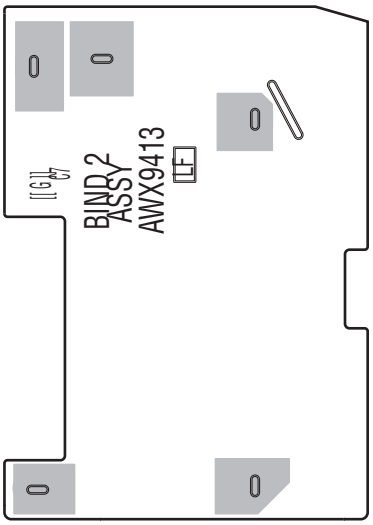

(ANP7689-C)

SIDE B

I BIND 1 ASSY

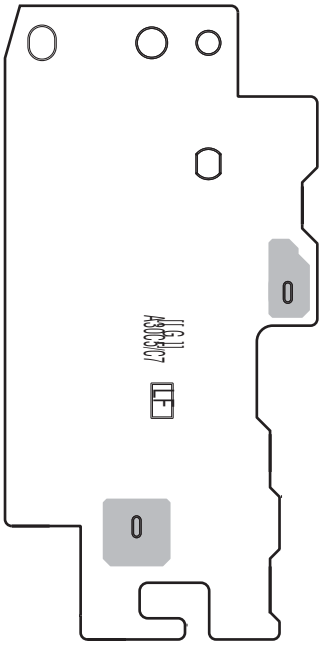

(ANP7690-B)

M BIND 5 ASSY

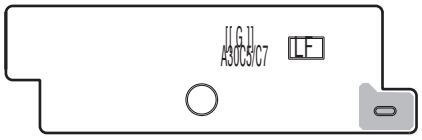

(ANP7690-B)

K BIND 3 ASSY

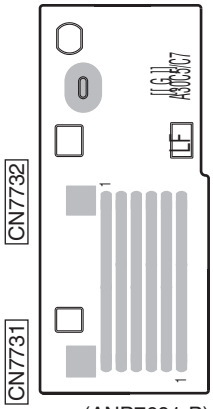

(ANP7691-B)

L BIND 4 ASSY

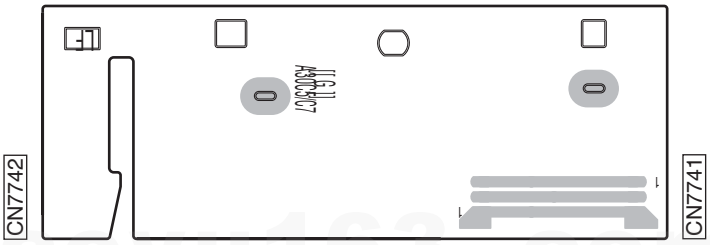

(ANP7691-B)

http://www.xiaoyu163.com

http://www.xiaoyu163.com

11.7 V6 FRONT INPUT, V6 JOG, V6 POWER SW AND V6 H.P ASSYS

SIDE A

QQ 376315150 892498299

N V6 FRONT INPUT ASSY

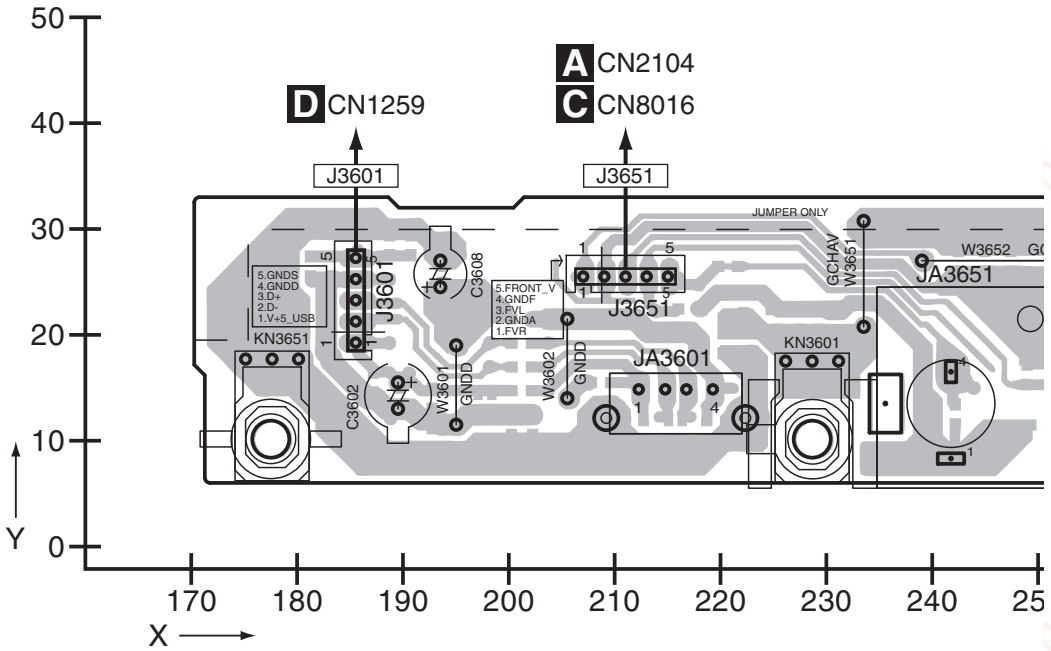

TEL 13942296513 QQ 376315150 892498299

O V6 JOG ASSY

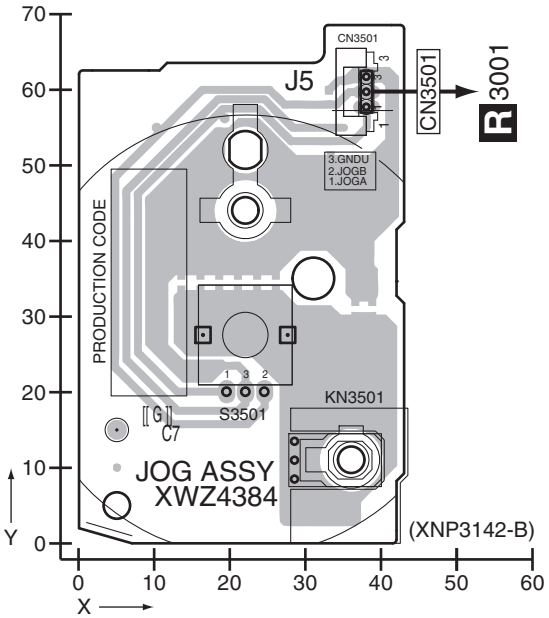

P V6 POWER SW ASSY

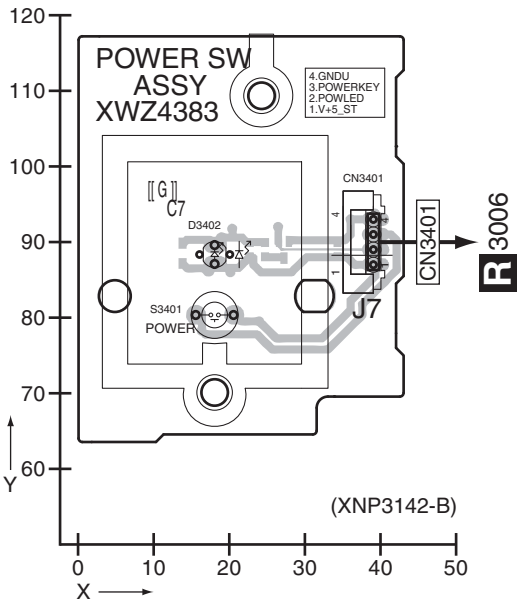

www.xiaoyu163.com

N O P

http://www.xiaoyu163.com

http://www.xiaoyu163.com

SIDE A

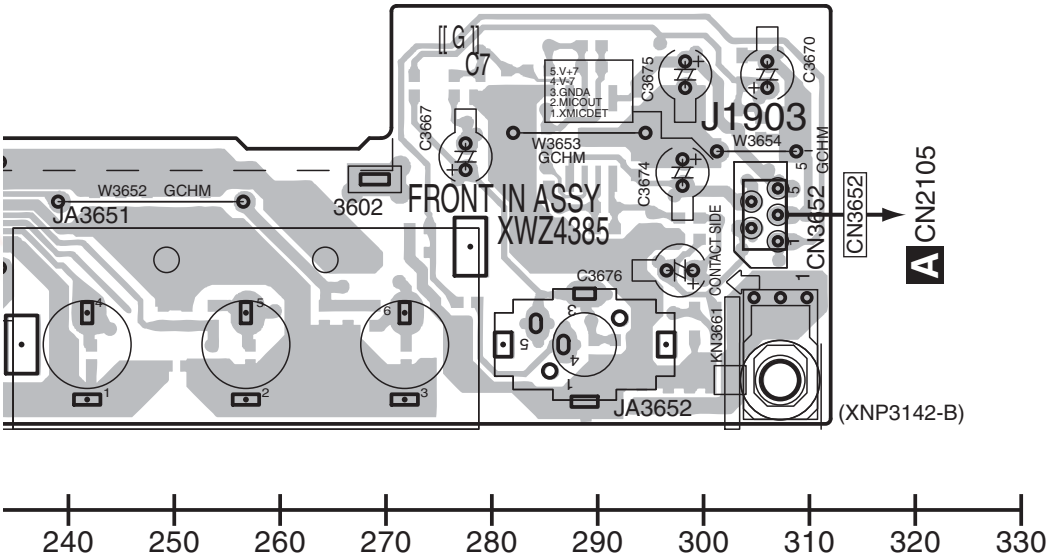

Q V6 H.P ASSY

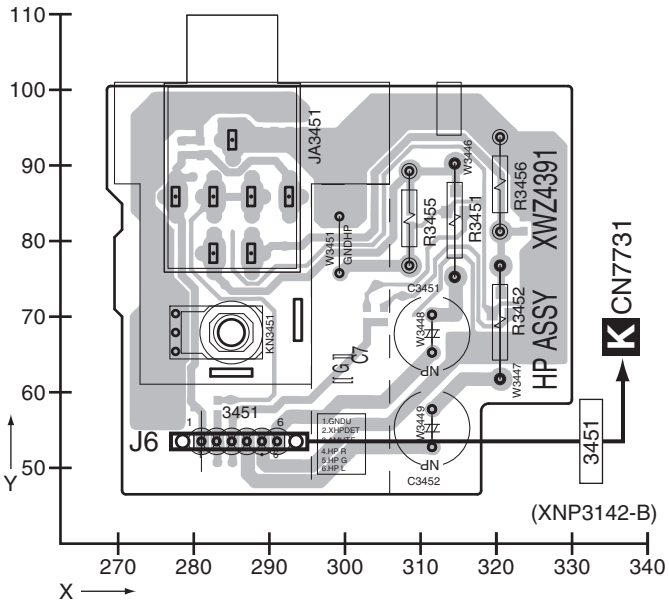

www.xiaoyu163.com

N Q

http://www.xiaoyu163.com

http://www.xiaoyu163.com

SIDE B

N V6 FRONT INPUT ASSY

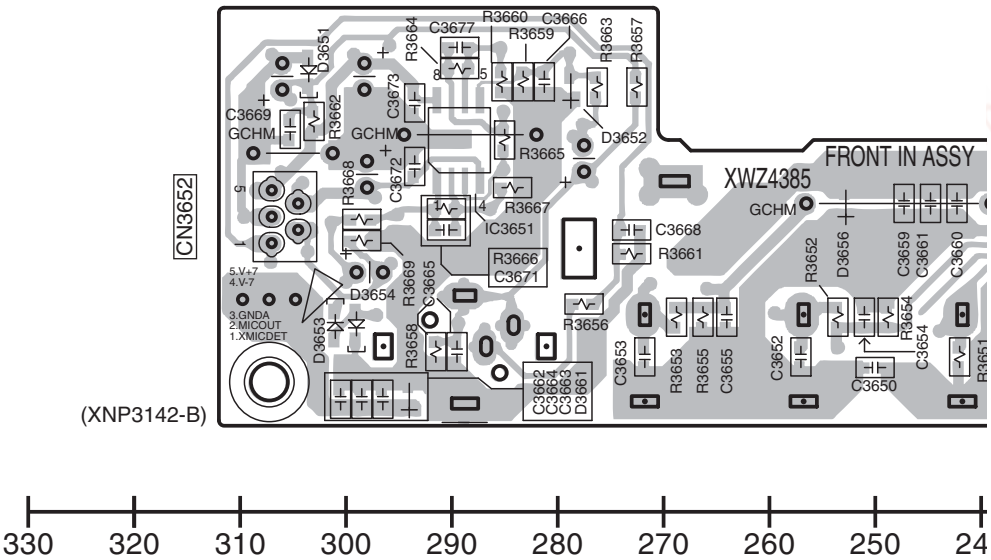

Q V6 H.P ASSY

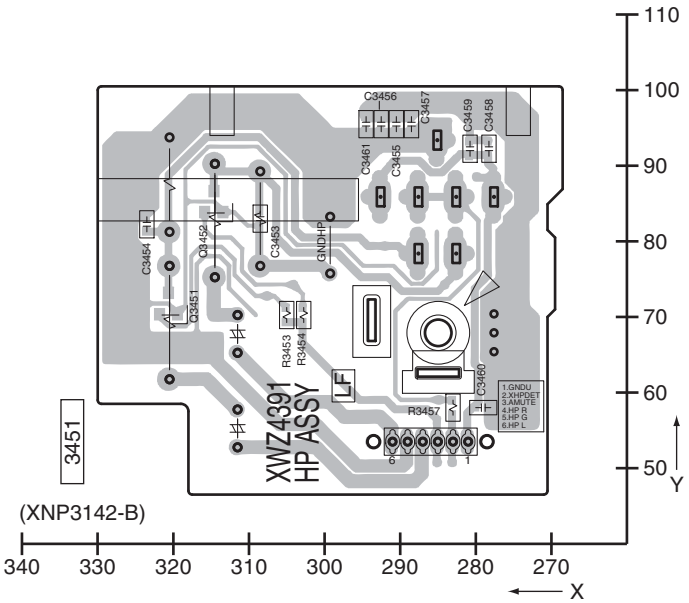

QQ 376315150 892498299
TEL 13942296513
www.xiaoyu163.com

http://www.xiaoyu163.com

http://www.xiaoyu163.com

SIDE B

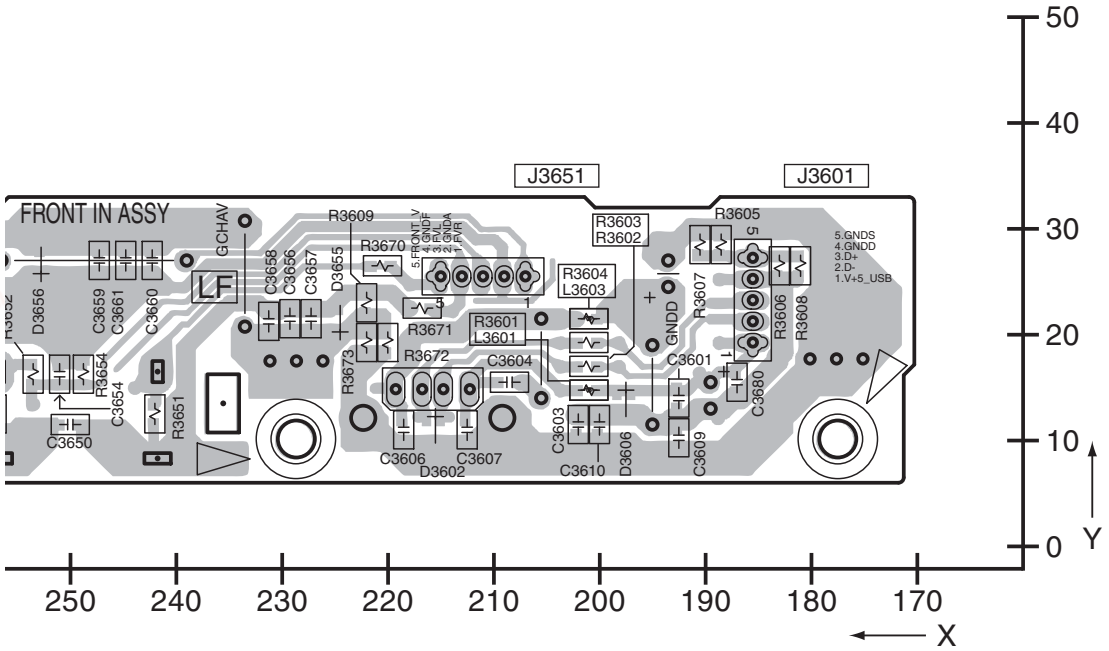

P V6 POWER SW ASSY

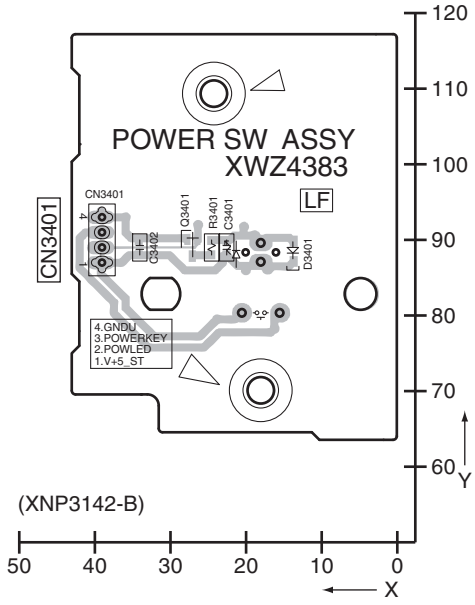

O V6 JOG ASSY

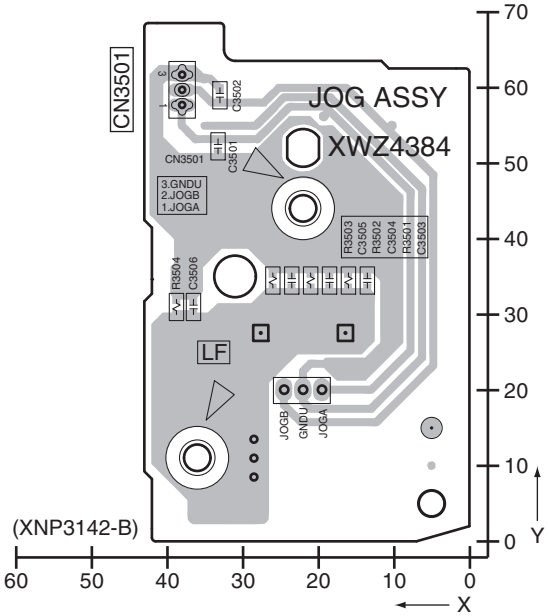

QQ 376315150 892498299
TEL 13942296513
www.xiaoyu163.com

N O P

http://www.xiaoyu163.com

http://www.xiaoyu163.com

11.8 V6 DISPLAY ASSY

SIDE A

QQ 376315150 892498299

R V6 DISPLAY ASSY

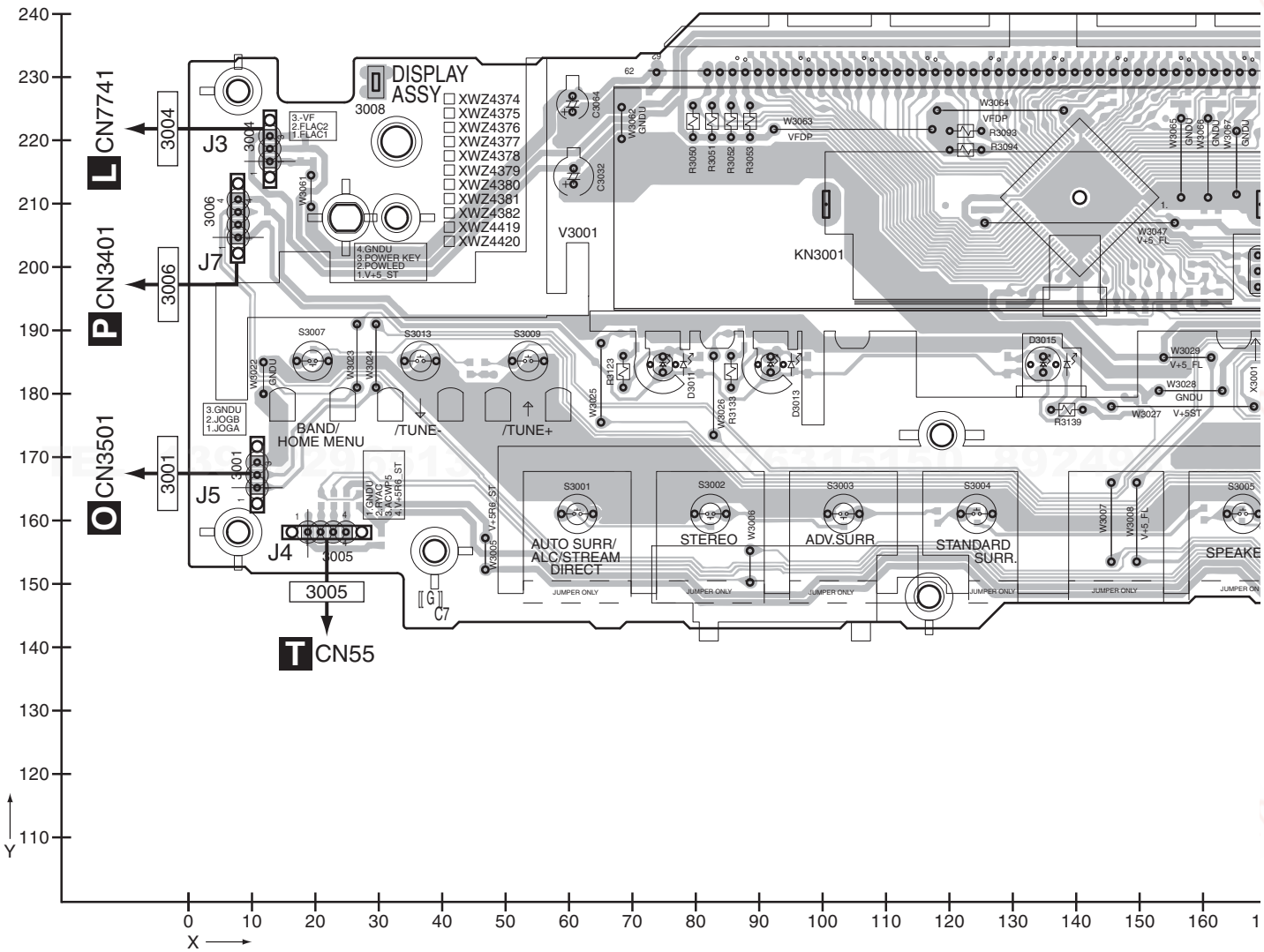

www.xiaoyu163.com

http://www.xiaoyu163.com

http://www.xiaoyu163.com

SIDE A

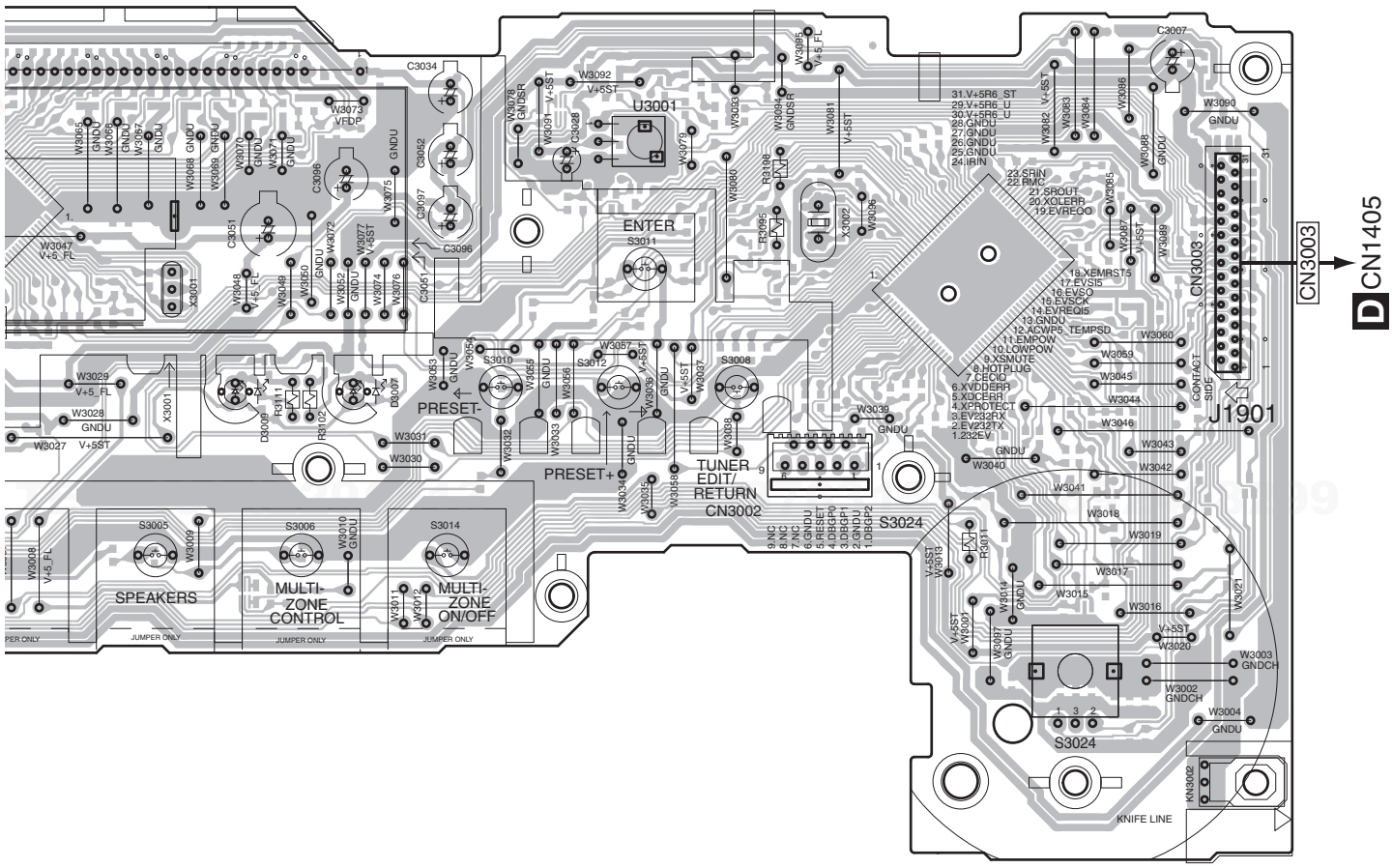

(XNP3142-B)

www.xiaoyu163.com

http://www.xiaoyu163.com

http://www.xiaoyu163.com

SIDE B

R V6 DISPLAY ASSY

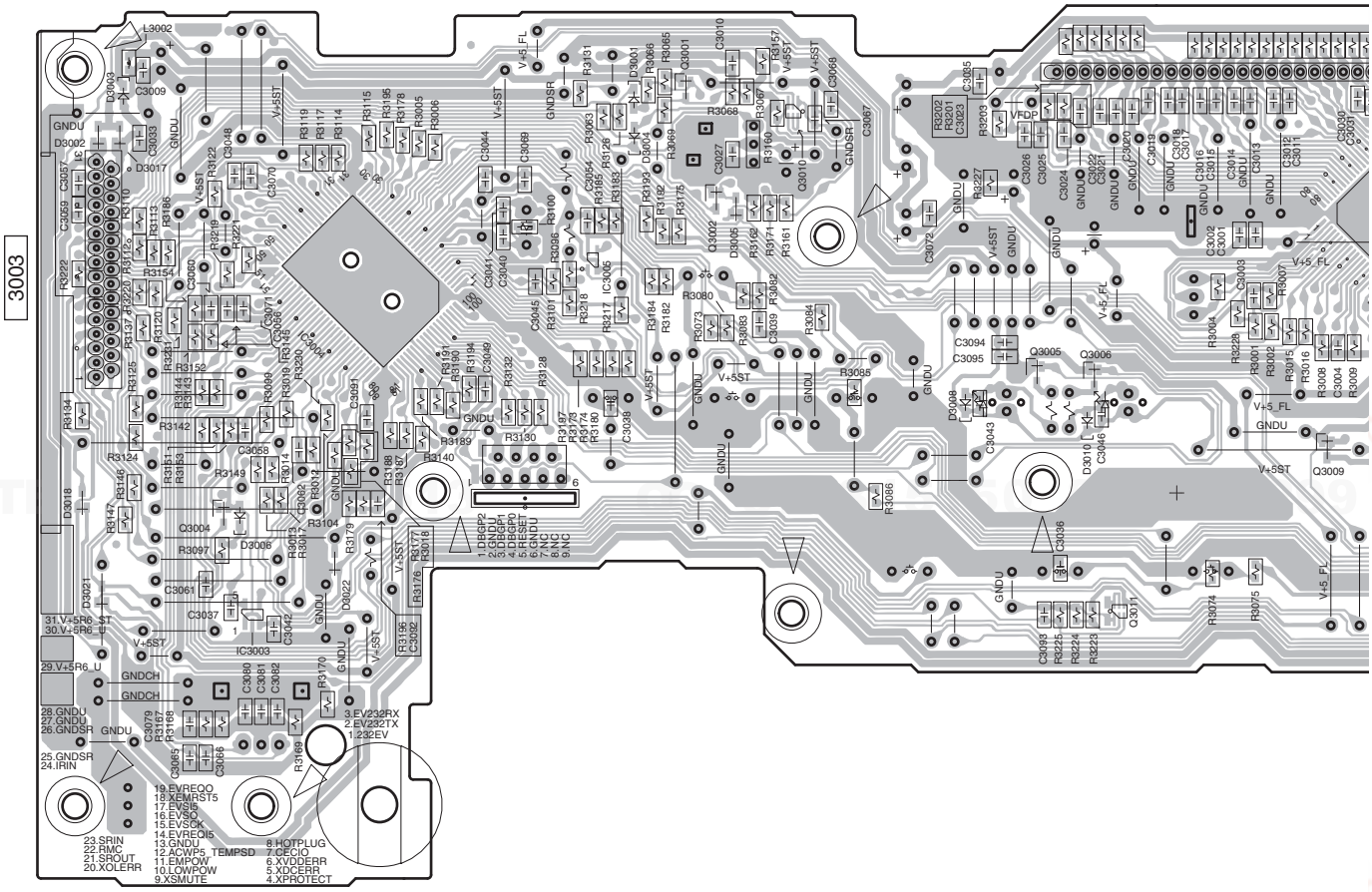

(XNP3142-B)

340 330 320 310 300 290 280 270 260 250 240 230 220 210 200 190 180 170 160 150

www.xiaoyu163.com

http://www.xiaoyu163.com

http://www.xiaoyu163.com

SIDE B

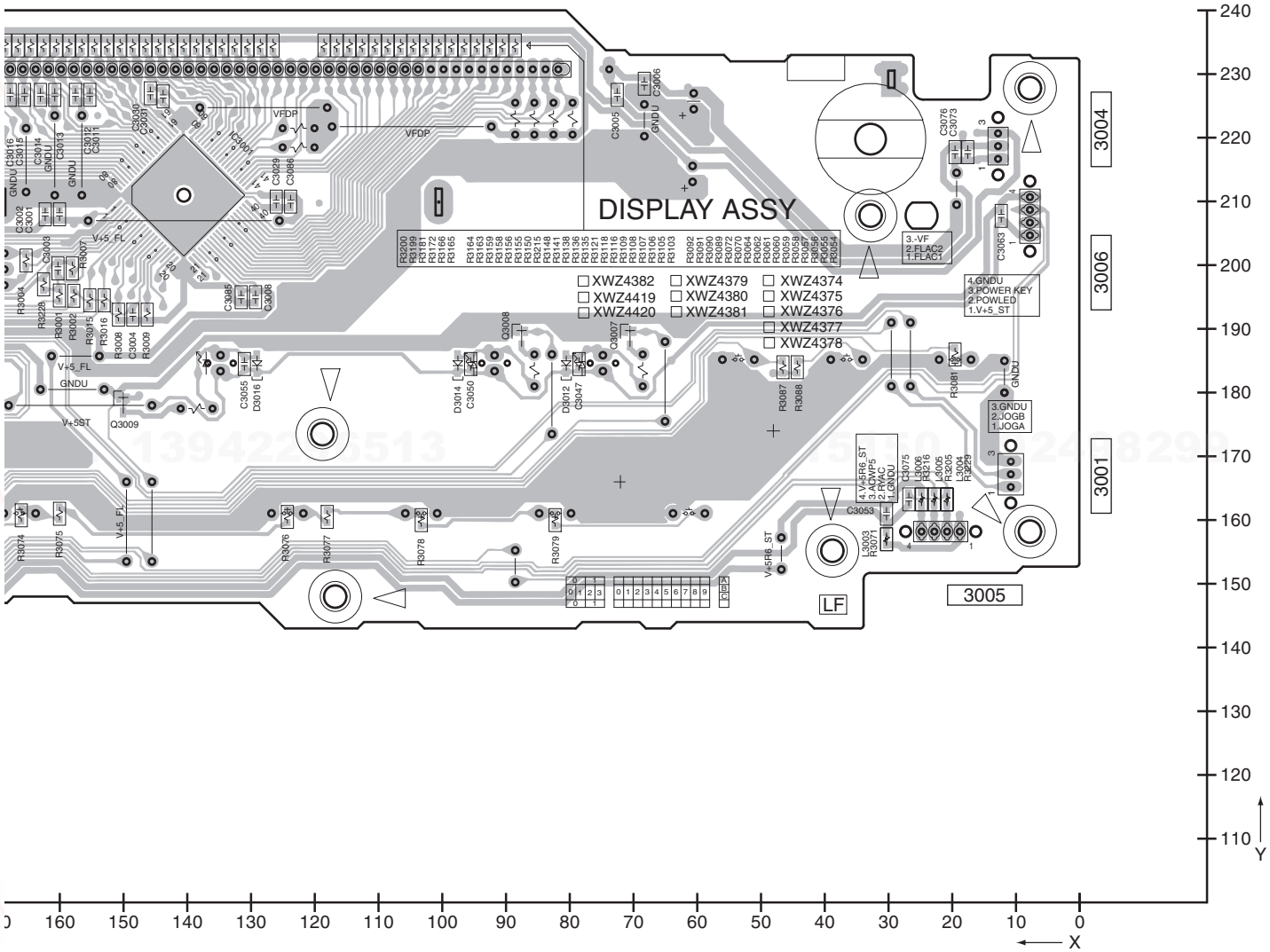

http://www.xiaoyu163.com

http://www.xiaoyu163.com

11.9 REGULATOR, V6 PRIMARY, V6 TRANS 1, TRANS 2 AND TRANS 3 ASSYS

SIDE A

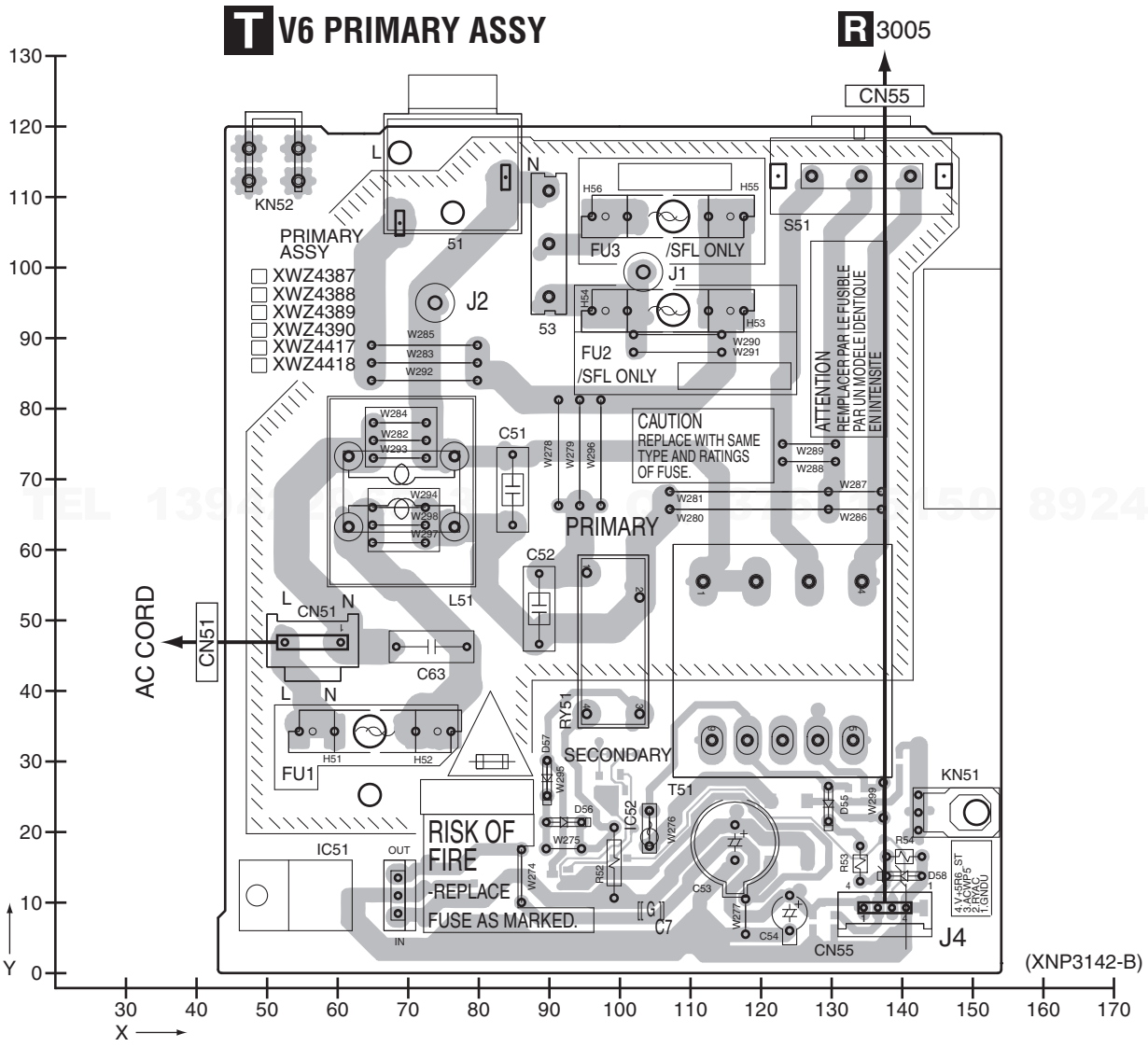

http://www.xiaoyu163.com

http://www.xiaoyu163.com

SIDE A

S REGULATOR ASSY

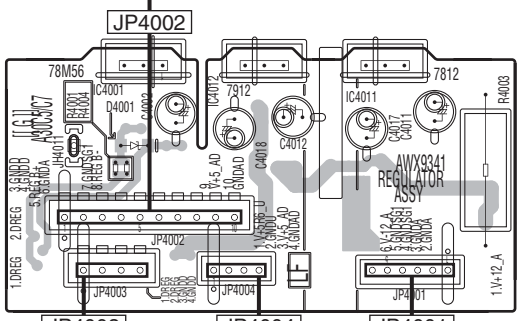

(ANP7691-B)

JP4003 → D CN1900

JP4004 → D CN1903

JP4001 → G CN7611

V TRANS 2 ASSY

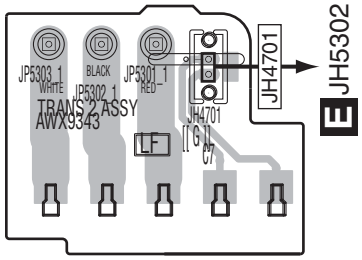

(ANP7689-C)

U V6 TRANS 1 ASSY

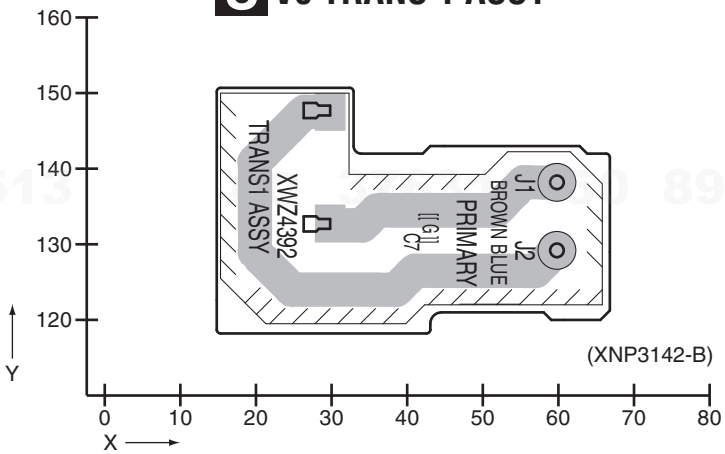

(XNP3142-B)

W TRANS 3 ASSY

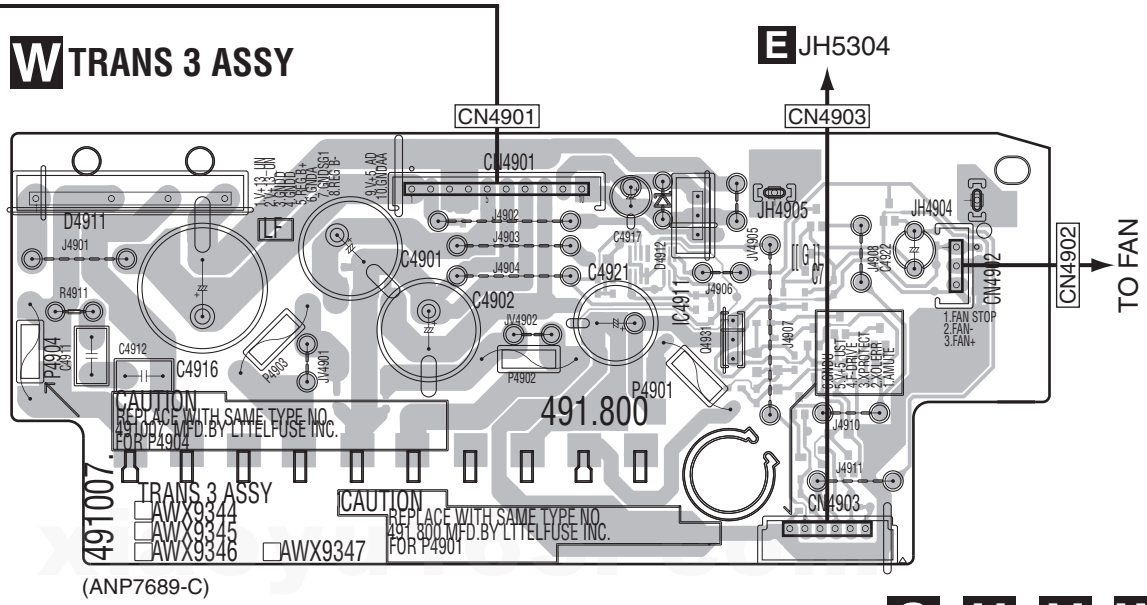

(ANP7689-C)

S U V W

http://www.xiaoyu163.com

http://www.xiaoyu163.com

SIDE B

V TRANS 2 ASSY

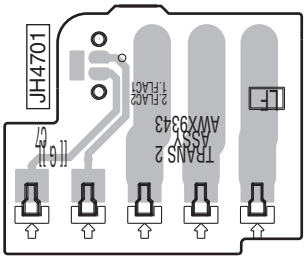

(ANP7689-C)

S REGULATOR ASSY

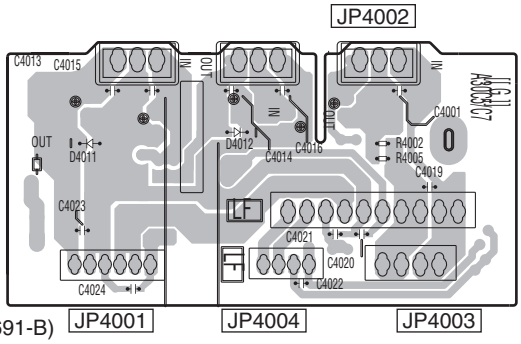

(ANP7691-B)

U V6 TRANS 1 ASSY

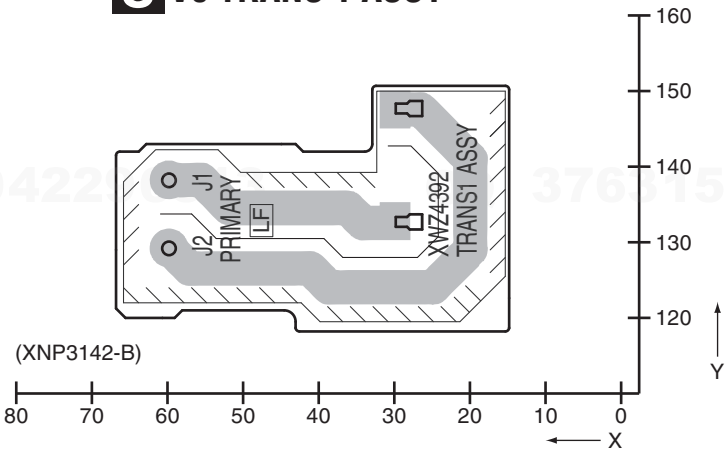

(XNP3142-B)

W TRANS 3 ASSY

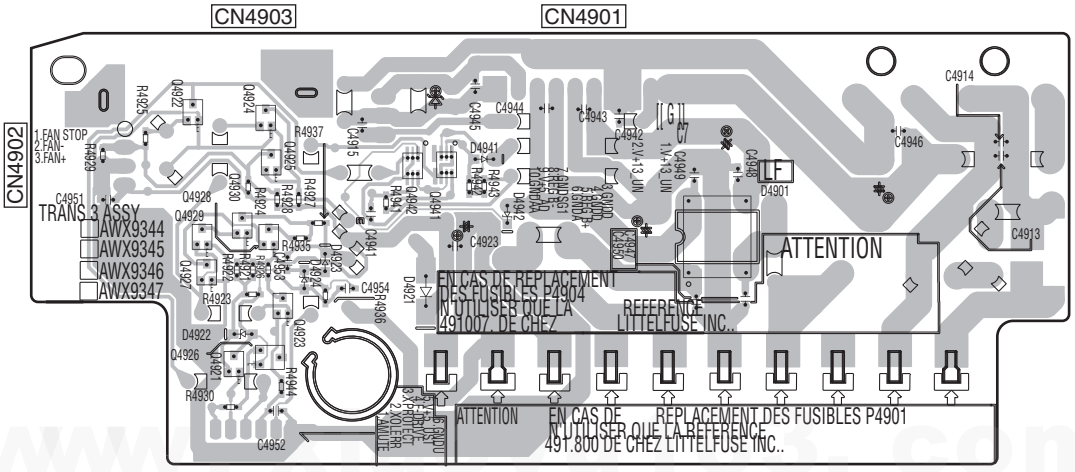

(ANP7689-C)

S U V W

http://www.xiaoyu163.com

http://www.xiaoyu163.com

SIDE B

T V6 PRIMARY ASSY

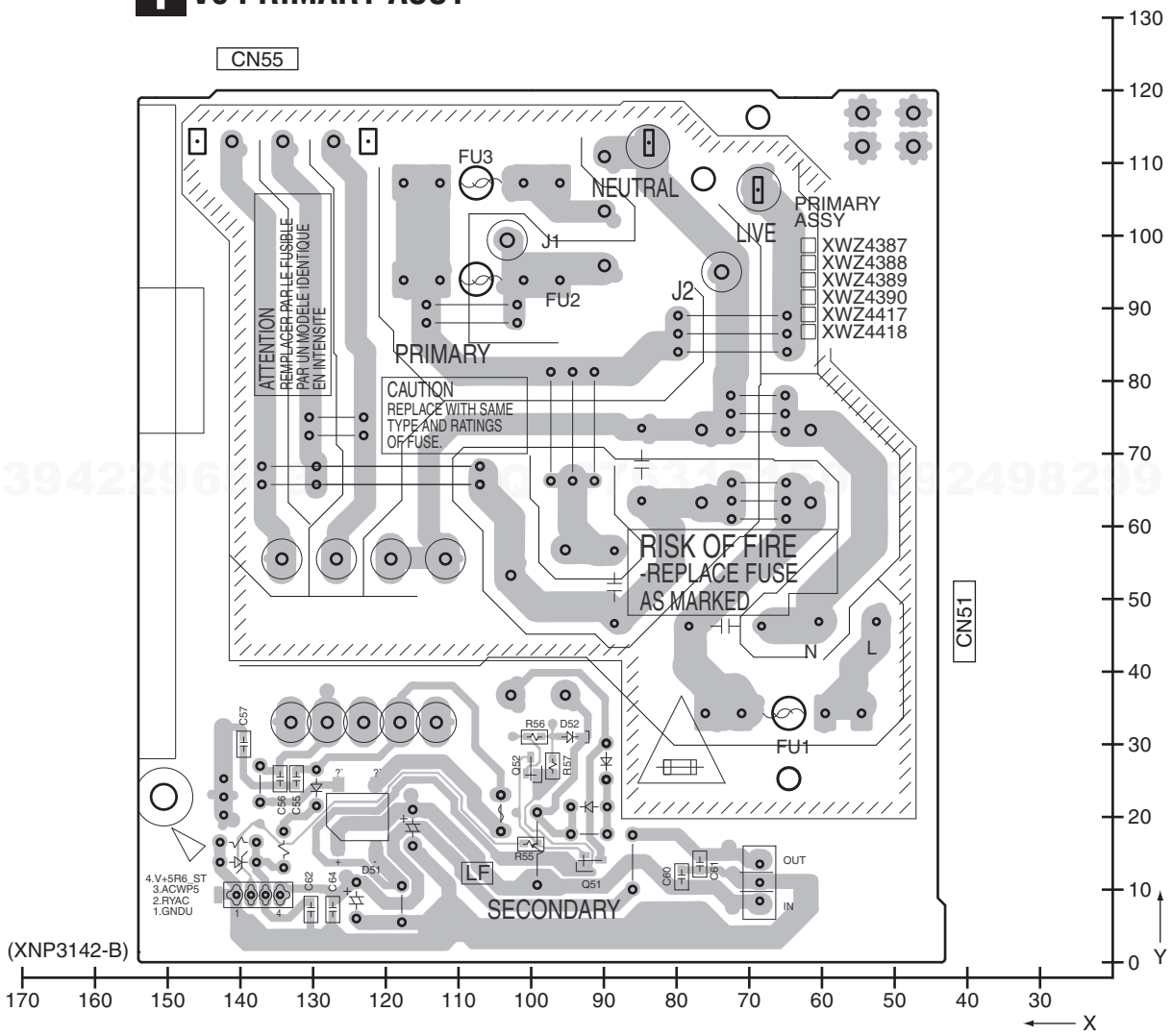

http://www.xiaoyu163.com

http://www.xiaoyu163.com

12. PCB PARTS LIST

NOTES: ● *Parts marked by "NSP" are generally unavailable because they are not in our Master Spare Parts List.*

● *The ⚠ mark found on some component parts indicates the importance of the safety factor of the part. Therefore, when replacing, be sure to use parts of identical designation.*

● *When ordering resistors, first convert resistance values into code form as shown in the following examples.*

Ex.1 When there are 2 effective digits (any digit apart from 0), such as 560 ohm and 47 k ohm (tolerance is shown by J = 5%, and K = 10%).

560 Ω	→	56×10^1	→	561	RD1/4PU 5 6 1 J
47 kΩ	→	47×10^3	→	473	RD1/4PU 4 7 3 J
0.5 Ω	→	R50			RN2H R 5 0 K
1 Ω	→	1R0			RS1P 1 R 0 K

Ex.2 When there are 3 effective digits (such as in high precision metal film resistors).

5.62 kΩ	→	562×10^1	→	5621	RN1/4PC 5 6 2 1 F

● *Meaning of the figures and others in the parentheses in the parts list.*

Example) IC 301 is on the point (face A, 91 of x-axis, and 111 of y-axis) of the corresponding PC board.
IC 301 (A, 91, 111) IC NJM2068V

LIST OF ASSEMBLIES

Mark	No.	Description	Part No.
NSP	1..	AMP ASSY	AWK8073
	2..	POWER PACK ASSY	AWX9337
	2..	IR/SR ASSY	AWX9342
	2..	TRANS 2 ASSY	AWX9343
	2..	TRANS 3 ASSY	AWX9344
	2..	BRIDGE 1 ASSY	AWX9348
	2..	BRIDGE 2 ASSY	AWX9349
	2..	BIND 2 ASSY	AWX9413
NSP	1..	COMPONENT_BIND ASSY	AWK8077
	2..	COMPONENT ASSY	AWX9350
	2..	BIND 1 ASSY	AWX9412
	2..	BIND 5 ASSY	AWX9515
NSP	1..	AUDIO ASSY	AWK8079
	2..	REGULATOR ASSY	AWX9341
	2..	AUDIO ASSY	AWX9352
	2..	BIND 3 ASSY	AWX9424
	2..	BIND 4 ASSY	AWX9428
	1..	DIGITAL MAIN ASSY (VSX-1019AH)	AWX9427
	1..	DIGITAL MAIN ASSY (VSX-919AH)	AWX9426
NSP	1..	COMPLEX ASSY (VSX-1019AH)	XWK3375
NSP	1..	COMPLEX ASSY (VSX-919AH)	XWK3376
	2..	V6 DISPLAY ASSY (VSX-1019AH)	XWZ4374
	2..	V6 DISPLAY ASSY (VSX-919AH)	XWZ4375
	2..	V6 POWER SW ASSY	XWZ4383
	2..	V6 JOG ASSY	XWZ4384
	2..	V6 FRONT INPUT ASSY	XWZ4385
	2..	V6 COMPOSITE ASSY (VSX-1019AH)	XWZ4386
	2..	V6 COMPOSITE ASSY (VSX-919AH)	XWZ4393
	2..	V6 PRIMARY ASSY	XWZ4387
	2..	V6 H.P ASSY	XWZ4391
	2..	V6 TRANS 1 ASSY	XWZ4392
	1..	FM/AM TUNER UNIT	AXX7250

CONTRAST OF PCB ASSEMBLIES

B V6 COMPOSITE ASSY

XWZ4386 and XWZ4393 are constructed the same except for the following:

Mark	Symbol and Description	XWZ4386	XWZ4393
	IC8506	PDC162A-TBB	Not used
	Q8502	LSC4081UB(QR)-TLB	Not used
	D8505	MC2846-11-TLB	Not used
	L8501	LCYA330J2520-T	Not used
	X8501	ASS7080-A -T	Not used
	R8526,R8539	RS1/10SR102J-T	Not used
	R8537	RS1/10SR512J-T	Not used
	R8538	RS1/10SR392J-T	Not used
	R8542	Not used	RS1/10SR0R0J-T
	R8545,R8546,R8547	RS1/10SR331J-T	Not used
	C8521,C8536,C8537,C8538	CCSRCH101J50-T	Not used
	C8522,C8523	CKSRYB122K50-T	Not used

http://www.xiaoyu163.com

http://www.xiaoyu163.com

Mark	Symbol and Description	XWZ4386	XWZ4393
	C8526,C8530	CKSRYB473K25-T	Not used
	C8528	CKSRYB103K50-T	Not used
	C8532,C8533	CCSRCH5R0C50-T	Not used
	C8534,C8535	CCSRCH240J50-T	Not used
	C8539,C8540	CEAT101M10-TS	Not used

R V6 DISPLAY ASSY

XWZ4374 and XWZ4375 are constructed the same except for the following:

Mark	Symbol and Description	XWZ4374	XWZ4375
	R3183	RS1/10SR473J-T	Not used
	R3182	Not used	RS1/10SR473J-T

PCB PARTS LIST FOR VSX-1019AH UNLESS OTHER WISE NOTED

A AUDIO ASSY

SEMICONDUCTORS

Mark	No.	Description	Part No.
	IC 2352,2701,2702,2741		NJM4565MD
	IC 2501		BD3473KS2
	IC 2502		TC4066BFT
	IC 2503		M61545FP
	IC 2761,2781,2801,2821		NJM4565MD
	Q 2001,2312		IMX25
⚠	Q 2401		2SD1858X
⚠	Q 2402		2SB1237X
⚠	Q 2681		2SD1664
	Q 2701		RT3T22M
	D 2352,2502		DAN217U
	D 2401,2402		HZU7R5(B2)
	D 2501		1SS302
	D 2681		UDZS10(B)

MISCELLANEOUS

Mark	No.	Description	Part No.
	JA 2101	JACK	DKB1083
	JA 2102-2106	PIN JACK(4P)	AKB7114
	JA 2107	PIN JACK(1P)	AKB7111
	CN 2003	CONNECTOR	CKS3376
	CN 2102,2103	19P SOCKET	XKP3080
	CN 2104	L-PLUG(3P)	KM200NA3L
	CN 2105	5P CONNECTOR	52044-0545
	CN 2106	23P SOCKET	XKP3082
	CN 2201	13P SOCKET	XKP3077

RESISTORS

Mark	No.	Description	Part No.
	R 2684		RD1/4MUF391J
	Other Resistors		RS1/10SR###J

CAPACITORS

Mark	No.	Description	Part No.
	C 2003,2004,2331,2407		CCSRCH471J50
	C 2101,2103,2301,2325		CKSRYB103K50
	C 2151-2154,2161-2164		CCSRCH101J50
	C 2155,2156,2165,2166		CEAT470M25
	C 2171-2174,2333		CCSRCH101J50
	C 2175,2176,2332		CEAT470M25
	C 2326,2411,2412		CEAT101M25
	C 2327,2409,2410		CKSRYB103K50
	C 2328,2569,2632-2635		CKSRYB104K16
	C 2401,2402,2559-2562		CEAT2R2M50
	C 2403,2404,2547,2548		CEAT100M50
	C 2408,2703,2704,2911		CCSRCH471J50
	C 2573,2576,2578		CKSRYB103K50
	C 2501-2506,2509-2514		CCSRCH101J50
	C 2507,2508,2517,2518		CCSRCH221J50
	C 2415,2416		CCSRCH102J50
	C 2521-2526,2529-2534		CCSRCH151J50
	C 2541-2546,2549-2554		CEAT470M25
	C 2557,2558,2568,2591		CEAT100M50
	C 2565,2566,2637,2638		CCSRCH101J50
	C 2585-2588,2621-2628		CEAT470M25
	C 2592,2701,2702,2709		CEAT100M50
	C 2603,2684		CEAT101M16
	C 2631,2636		CKSRYB222K50
	C 2643,2644,2698,2719		CKSRYB104K16
	C 2682,2699,2717,2718		CKSRYB103K50
	C 2697		CKSRYB105K16
	C 2705-2708,2743,2745		CCSRCH331J50
	C 2710,2713,2714,2741		CEAT100M50
	C 2720,2834,2835		CKSRYB104K16
	C 2721,2722,2746,2753		CKSRYB103K50
	C 2742,2749,2750,2761		CEAT100M50
	C 2744		CKSRYB223K50
	C 2747,2767,2768,2787		CCSRCH391J50
	C 2748		CKSRYB562K50
	C 2751,2752,2771,2772		CKSRYB472K50
	C 2754,2773,2774,2793		CKSRYB103K50
	C 2762,2769,2770,2781		CEAT100M50
	C 2763-2766,2783-2786		CCSRCH331J50
	C 2782,2789,2790,2801		CEAT100M50
	C 2788,2807,2808		CCSRCH391J50
	C 2791,2792,2811,2812		CKSRYB472K50
	C 2794,2813,2814,2910		CKSRYB103K50
	C 2802,2809,2810,2836		CEAT100M50
	C 2803-2806		CCSRCH331J50
	C 2833		CCSRCH221J50
	C 2902-2905,2908		CCSRCH391J50
	C 2912		CCSRCH471J50

B V6 COMPOSITE ASSY

MISCELLANEOUS

Mark	No.	Description	Part No.
	IC 8501 (B,185,90)	LOGIC IC	TC74HC4051AFT
	IC 8502 (B,174,90)	LOGIC IC	TC74HC4051AFT
	IC 8503 (B,195,90)	IC	TC74HC4053AFT

http://www.xiaoyu163.com

http://www.xiaoyu163.com

Mark	No.	Description	Part No.
	IC 8504	(B,220,90) VIDEO AMP IC	LA7109
	IC 8505	(B,180,55) LOGIC IC	TC4094BFN
	IC 8506	(B,221,56) CHARACTER GENERATOR	PDC162A
	Q 8502	(B,227,70) TRANSISTOR	LSC4081UB
	Q 8503	(B,261,98) TRANSISTOR	LSA1576UB
	D 8501	(B,196,69) DIODE	MC2848-11
	D 8502	(B,200,70) DIODE	1SS355
	D 8505	(B,233,71) DIODE	MC2846-11
	D 8506	(B,262,80) DIODE	1SS355
	D 8507	(B,237,81) DIODE	1SS355
	D 8508	(B,202,81) DIODE	MC2848-11
	L 8501	(B,221,46) CHIP COIL	LCYA330J2520
	JA 8501	(A,180,122) PIN JACK(2P)	AKB7176
	JA 8502	(A,208,122) PIN JACK(2P)	AKB7176
	JA 8503	(A,236,122) PIN JACK(2P)	AKB7176
	X 8501	(A,235,56) CRYSTAL (14.31818 MHz)	ASS7080
	CN 8501	(A,264,46) 19P SOCKET	XKP3080

RESISTORS

Mark	No.	Description	Part No.
	R 8501	(B,170,59)	RS1/10SR103J
	R 8503	(B,223,75)	RS1/10SR473J
	R 8504	(B,224,78)	RS1/10SR103J
	R 8505	(B,228,112)	RS1/10SR2200F
	R 8506	(B,226,112) CHIP RESISTOR	RS1/10SR1200F
	R 8507	(B,214,112)	RS1/10SR750J
	R 8508	(B,209,83)	RS1/10SR103J
	R 8509	(B,222,78)	RS1/10SR103J
	R 8511	(B,202,113)	RS1/10SR750J
	R 8513	(B,209,79)	RS1/10SR473J
	R 8514	(B,209,81)	RS1/10SR103J
	R 8515	(B,187,111)	RS1/10SR2200F
	R 8516	(B,185,111) CHIP RESISTOR	RS1/10SR1200F
	R 8517	(B,172,113)	RS1/10SR750J
	R 8518	(B,170,57)	RS1/10SR473J
	R 8519	(B,189,57)	RS1/10SR473J
	R 8520	(B,189,65)	RS1/10SR473J
	R 8521	(B,189,63)	RS1/10SR473J
	R 8522	(B,204,88)	RS1/10SR103J
	R 8523	(B,240,111)	RS1/10SR2200F
	R 8524	(B,242,111) CHIP RESISTOR	RS1/10SR1200F
	R 8525	(B,209,97)	RS1/10SR0R0J
	R 8526	(B,243,62)	RS1/10SR102J
	R 8527	(B,188,51)	RS1/10SR0R0J
	R 8530	(B,181,46)	RS1/10SR473J
	R 8531	(B,179,46)	RS1/10SR473J
	R 8532	(B,176,46)	RS1/10SR473J
	R 8533	(B,173,46)	RS1/10SR473J
	R 8534	(B,263,90)	RS1/10SR104J
	R 8535	(B,260,90)	RS1/10SR823J
	R 8537	(B,214,69)	RS1/10SR512J
	R 8538	(B,216,69)	RS1/10SR392J
	R 8539	(B,224,71)	RS1/10SR102J
	R 8541	(B,247,84)	RS1/10SR0R0J
	R 8545	(B,239,42)	RS1/10SR331J
	R 8546	(B,237,47)	RS1/10SR331J
	R 8547	(B,237,45)	RS1/10SR331J
	R 8548	(B,264,39)	RS1/10SR0R0J
	R 8549	(B,254,90)	RS1/10SR471J
	R 8550	(B,179,114)	RS1/10SR0R0J
	R 8551	(B,233,114)	RS1/10SR0R0J
	R 8552	(B,205,114)	RS1/10SR0R0J
	R 8554	(B,254,76)	RS1/10SR0R0J
	R 8555	(B,264,97)	RS1/10SR0R0J
	R 8556	(B,215,106)	RS1/10SR0R0J
	R 8557	(B,215,108)	RS1/10SR0R0J
	R 8558	(B,236,114)	RS1/10SR0R0J
	R 8559	(B,209,114)	RS1/10SR0R0J
	R 8560	(B,183,114)	RS1/10SR0R0J

CAPACITORS

Mark	No.	Description	Part No.
	C 8501	(A,170,65)	CEAT101M10
	C 8502	(B,173,81)	CKSRYB104K16
	C 8503	(B,195,82)	CKSRYB104K16
	C 8504	(B,180,93)	CKSRYB104K16
	C 8505	(B,198,98)	CKSRYB104K16
	C 8506	(A,202,98)	CEAT101M10
	C 8507	(B,228,116)	CCSRCH181J50
	C 8509	(B,188,114)	CCSRCH181J50
	C 8510	(B,180,87)	CKSRYB104K16
	C 8511	(A,202,86)	CEAT101M10
	C 8512	(B,242,113)	CCSRCH181J50
	C 8513	(B,190,93)	CKSRYB104K16
	C 8514	(A,236,91)	CEAT101M10
	C 8515	(A,236,84)	CEAT101M10
	C 8516	(B,189,59)	CKSRYB104K16
	C 8517	(B,229,88)	CKSRYB104K16
	C 8518	(B,229,93)	CKSRYB104K16
	C 8520	(A,253,95)	CEAT101M10
	C 8521	(B,238,63)	CCSRCH101J50
	C 8522	(B,211,57)	CKSRYB122K50
	C 8523	(B,216,65)	CKSRYB122K50
	C 8525	(B,264,101)	CKSRYB103K50
	C 8526	(B,232,61)	CKSRYB473K25
	C 8528	(B,230,69)	CKSRYB103K50
	C 8530	(B,210,51)	CKSRYB473K25
	C 8532	(B,239,53)	CCSRCH5R0C50
	C 8533	(B,239,57)	CCSRCH5R0C50
	C 8534	(B,227,47)	CCSRCH240J50
	C 8535	(B,227,45)	CCSRCH240J50
	C 8536	(B,216,44)	CCSRCH101J50
	C 8537	(B,231,44)	CCSRCH101J50
	C 8538	(B,233,44)	CCSRCH101J50
	C 8539	(A,237,68)	CEAT101M10
	C 8540	(A,211,45)	CEAT101M10
	C 8545	(B,257,97)	CKSRYB103K50

C COMPONENT ASSY

SEMICONDUCTORS

Mark	No.	Description	Part No.
	IC 8041,8051		TC74LVX4053FT
	IC 8061		NJM2581M
	IC 8081		LA7213
	IC 8101		BU4094BCFV
	IC 8231		TC74LVX4051FT
	IC 8311		MM1511XN
	IC 8351,8361,8441		TC74VHCT08AFTS1
	IC 8451		NJM2505AF
	Q 8081,8201,8202,8211		LSA1576UB
	Q 8082		RT1N141M-11
	Q 8212,8221,8222,8241		LSA1576UB

http://www.xiaoyu163.com

http://www.xiaoyu163.com

Mark	No.	Description	Part No.
	Q 8242		LSA1576UB
⚠	Q 8381,8421		2SD1858X
⚠	Q 8382		LSC4081UB
⚠	Q 8401		2SB1237X
⚠	Q 8402		LSA1576UB
	D 8081,8351		1SS355
	D 8352		MC2848-11
	D 8381,8401,8421		UDZS6R2(B)
	D 8382,8402		RR264M-400
	D 8451		DAN217U

MISCELLANEOUS

L 8457,8458	INDUCTOR	CTF1473
JA 8021	6P RCA PINJACK	XKB3025
JA 8071	3P RCA PINJACK	AKB7208
CN 8001,8005	18P SOCKET	AKP7232
CN 8003,8006,8007	19P PLUG	XKP3069
CN 8012,8015	19P SOCKET	XKP3080
CN 8016	PLUG(2P)	KM200NA2L
CN 8331	7P CONNECTOR	VKN1267
JH 8001	PCB BINDER	VEF1040

RESISTORS

R 8071,8073,8075		RS1/10SR1200F
R 8072,8074,8076		RS1/10SR2200F
R 8381,8401		RS3LMF220J
R 8421		RS3LMF390J
Other Resistors		RS1/10SR###J

CAPACITORS

C 8001,8081,8202,8204		CKSRYB103K50
C 8041,8042,8052,8054		CKSRYB104K16
C 8061,8062,8067-8069		CEAT101M10
C 8063,8064,8101,8231		CKSRYB104K16
C 8082		CEAT221M16
C 8083		CEAT3R3M50
C 8084		CEAT101M10
C 8205,8215,8225,8245		CEAT100M50
C 8212,8214,8222,8224		CKSRYB103K50
C 8242,8244,8314,8316		CKSRYB103K50
C 8312,8313		CKSRYB105K10
C 8315		CEAT470M16
C 8332,8451		CKSRYB103K50
C 8351,8361,8441,8455		CKSRYB104K16
C 8387,8407		CKSRYB224K10
C 8423		CEAT101M16
C 8452,8453		CKSQYB106K6R3
C 8011,8012,8456		CCSRCH102J50

D DIGITAL MAIN ASSY (VSX-1019AH)

SEMICONDUCTORS

Mark	No.	Description	Part No.
	IC 101		AK4114VQ
	IC 215,1081,1306,9003		TC7SH08FUS1
	IC 221,231,9002		TC74VHC157FTS1
	IC 241,1403,1405		TC74VHC125FTS1
	IC 251		K4S641632N-LC60
	IC 261		AYW7302
	IC 271		TC7SH32FUS1
	IC 281,291		TC74LCX573FTS1
	IC 301		DSPA56720AG
	IC 361		TC74VHC04FTS1
	IC 363		TC7WH126FU
	IC 364		TC7SZ08FU
	IC 391,1407		TC74VHC08FTS1
	IC 452,1801-1803,1805		TC74LCX541FTS1
	IC 501		AK5358AET
	IC 521		AK4388ET
⚠	IC 581		NJM2885DL1-33
⚠	IC 582		RP131H101D
	IC 602,652,702,752		WM8728SEDS
	IC 800		UPD61283F1-407LU2A
	IC 801,802		NJM12904V
	IC 803,1302,1702		TC7WHU04FU
	IC 1000,1001		K4H561638J-LCB3
	IC 1050		AYW7303
⚠	IC 1100,1101		S-1170B33UC-OTS
⚠	IC 1102		S-1170B25UC-OTK
⚠	IC 1104		MM1701WH
⚠	IC 1250,9001		AAT4614AIGU-2
	IC 1251		TC7PAU04FU
	IC 1300		PE7008A
	IC 1301		341S2164
⚠	IC 1303		S-1132B25-U5
	IC 1304,1305		BU4094BCFV
	IC 1401		TC74VHC126FTS1
	IC 1402,1408		TC74VHCT08AFTS1
	IC 1404		TC74VHC02FTS1
	IC 1406		TC74VHCT125AFTS1
	IC 1501		SII9233ACTU
	IC 1563		TC7WH157FU
	IC 1566		TC74VHC541FTS1
⚠	IC 1592		R1172H121B
	IC 1601		CXB1444R
	IC 1605		TC74VHC153FT
	IC 1701		ADV7181CBSTZ
	IC 1800		ABT1015
	IC 1804,1806		TC7SZ125FU
	IC 1807-1811		TC74VCX541FT
	IC 1813		TC7SA08FU
⚠	IC 1900		TPS54350PWP
⚠	IC 1930		LTC3850EGN
	IC 9000		SII9134CTU
	Q 241,552		DTC124EUA
	Q 551		RTQ025P02
	Q 800,801,1150,1154		2SA1576A
	Q 1151,1155,1157,1998		2SC4081
	Q 1156,1200-1204,1405		2SA1576A
	Q 1300,1401-1404		DTA124EUA
	Q 1400		DTC114EUA
	Q 1408,1999		RN4903
⚠	Q 1900		RTQ045N03
⚠	Q 1930,1931		SP8K1
	Q 9000		UMB1N
	Q 9001		DTC114YUA
	D 484		1SS302
	D 501		MA152WA
	D 502		MA152WK
	D 551,1997		1SS352
	D 582		1SR154-400
	D 1200		RR264M-400

http://www.xiaoyu163.com

http://www.xiaoyu163.com

Mark	No.	Description	Part No.
D	1400		RB501V-40
D	1402,1503,1506,1509		DAN202U
D	1512		DAN202U
D	1930,1931		RB160VA-40
D	1998		DAP202U
D	1999		UDZS5R6(B)
D	9000		UDZS5R1(B)

MISCELLANEOUS

Mark	No.	Description	Part No.
L	101-103	CHIP SOLID INDUCTOR	QTL1013
L	215,221	CHIP SOLID INDUCTOR	QTL1013
L	231,241	CHIP SOLID INDUCTOR	QTL1013
L	251,261	CHIP SOLID INDUCTOR	QTL1013
L	281,291	CHIP SOLID INDUCTOR	QTL1013
L	301-303	CHIP SOLID INDUCTOR	QTL1013
L	361-365	CHIP SOLID INDUCTOR	QTL1013
L	367,452	CHIP SOLID INDUCTOR	QTL1013
L	475-483,1800-1810	INDUCTOR	CTF1473
L	501,502	CHIP SOLID INDUCTOR	QTL1013
L	521,551	CHIP SOLID INDUCTOR	QTL1013
L	541,542	INDUCTOR	CTF1379
L	561,562	CHIP SOLID INDUCTOR	ATL7002
L	601,602	CHIP SOLID INDUCTOR	QTL1013
L	651,652	CHIP SOLID INDUCTOR	QTL1013
L	701,702	CHIP SOLID INDUCTOR	QTL1013
L	751,752	CHIP SOLID INDUCTOR	QTL1013
L	800	INDUCTOR	LCTC150K2125
L	801-805,808,809	EMI FILTER	DTL1106
L	806	CHIP COIL	LCYA390J2520
L	807	INDUCTOR	LCYA150J2520
L	810,1081	CHIP SOLID INDUCTOR	QTL1013
L	1100,1302,1303	CHIP BEADS	ATL7010
L	1150,1154,1156	INDUCTOR	ATL7035
L	1151,1155,1157	INDUCTOR	ATL7033
L	1200,1201	INDUCTOR	LCTC100K2125
L	1202-1204	INDUCTOR	LCTC4R7K2125
L	1250	COIL	ATH7079
L	1251,1300	CHIP SOLID INDUCTOR	QTL1013
L	1272,1402-1409	FERRITE BEAD	CTF1528
L	1301,1304	CHIP SOLID INDUCTOR	QTL1013
L	1501-1504,1611,1701	CHIP BEADS	ATL7010
L	1505,1506	CHIP SOLID INDUCTOR	QTL1013
L	1563,1566	CHIP SOLID INDUCTOR	QTL1013
L	1702,1900,1902,1903	CHIP BEADS	ATL7010
L	1703,1704	CHIP SOLID INDUCTOR	QTL1013
L	1706	INDUCTOR	CTF1295
L	1812	INDUCTOR	CTF1473
L	1901	INDUCTOR	CTH1255
L	1930,9000-9003,9008	CHIP BEADS	ATL7010
L	1931	INDUCTOR	ATH7074
L	1932	INDUCTOR	ATH7073
L	9004-9007	COIL	ATH7064
L	9010,9013	INDUCTOR	CTF1386
L	9011,9012	CHIP SOLID INDUCTOR	QTL1013
F	800-803,1800-1802	EMI FILTER	DTL1106
JA	101	PIN JACK(2P)	AKB7173
JA	103,105	OPT. LINK IN	GP1FAV51RKBF
JA	481	SOCKET	BKP1127
JA	1601-1604,9000	HDMI CONNECTOR	AKP7224
KN	481	SCREW PLATE	VNE1948
KN	1300,1301	EARTH METAL FITTING	VNF1109
KN	1304	EARTH METAL FITTING	VNF1109
X	361	CRYSTAL (22.5792 MHz)	ASS7071
X	362	CRYSTAL (24.576 MHz)	ASS7072
X	801,1501	CRYSTAL (27 MHz)	ASS7092
X	1250	CRYSTAL (48 MHz)	ASS7099
X	1300	CRYSTAL (26.864 MHz)	ASS7094
X	1701	CRYSTAL (28.63636 MHz)	ASS7096
CN	482	15P SOCKET	XKP3078
CN	501	23P SOCKET	XKP3082
CN	1250,1254	CONNECTOR	CKS4573
CN	1252	19P SOCKET	XKP3080
CN	1259	CONNECTOR	AKM1276
CN	1400	13P SOCKET	XKP3077
CN	1405	31P CONNECTOR	VKN1262
CN	1903	PLUG(4P)	KM200NA4
CN	1904	CONNECTOR	B4B-EH
JH	1900	PCB BINDER	VEF1040

RESISTORS

Mark	No.	Part No.
R	119,221,223,225	RAB4CQ101J
R	121	RS1/16SS1802F
R	126,127,132,133	RS1/10SR0R0J
R	227,231,232,234	RAB4CQ101J
R	233,253,254,256	RAB4CQ470J
R	257,316-318,320	RAB4CQ470J
R	283,284,293,294	RAB4CQ101J
R	312,1582,1869	RAB4CQ680J
R	321,622,672,722	RAB4CQ470J
R	332,457,458,601	RAB4CQ101J
R	347,834,905-908	RAB4CQ103J
R	348	RAB4CQ220J
R	434,861,863,864	RAB4CQ0R0J
R	552	RS1/4SA4R7J
R	575,581,804,826	RS1/10SR0R0J
R	651,701,751,1320	RAB4CQ101J
R	772,1539,1703-1705	RAB4CQ470J
R	806	RS1/16SS6800D
R	807	RS1/16SS4700D
R	813,815	RS1/10SR43R0D
R	814,816	RS1/10SR1000D
R	820	RS1/10SR4700F
R	821,822,824,825	RS1/10SR1001F
R	855,857,926,1334	RAB4CQ473J
R	875,879	RAB4CQ221J
R	927,1050-1053,1306	RAB4CQ103J
R	977,978,993,994	RAB4CQ0R0J
R	1003,1004,1007,1008	RAB4CQ330J
R	1010,1011,1015,1016	RAB4CQ330J
R	1020,1021,1024,1025	RAB4CQ330J
R	1027,1028,1032,1033	RAB4CQ330J
R	1039-1041,1045	RAB4CQ560J
R	1150,1202,1268,1721	RS1/10SR0R0J
R	1152,1170,1179,1200	RS1/16SS2200F
R	1153,1173,1180	RS1/16SS5601F
R	1203,1209	RS1/16SS4700F
R	1206,1211,1216,1221	RS1/16SS2200F
R	1212,1217,1222	RS1/16SS56R0F
R	1214,1219,1224	RS1/16SS3300F
R	1347-1350	RAB4CQ101J

http://www.xiaoyu163.com

http://www.xiaoyu163.com

Mark	No.	Description	Part No.
R	1355,1555,1556,1856		RAB4CQ473J
R	1363		RAB4CQ104J
R	1406,1916		RS1/10SR100J
R	1525-1530,1532-1536		RAB4CQ100J
R	1632		RS1/16SS4701F
R	1707,1716,1717,1811		RAB4CQ470J
R	1722,1845,1846,1934		RS1/10SR0R0J
R	1800,1801,1803-1810		RAB4CQ0R0J
R	1812,1817-1819		RAB4CQ470J
R	1823-1825,1838-1840		RAB4CQ470J
R	1849		RAB4CQ472J
R	1852,1853,1867,1868		RAB4CQ470J
R	1858-1866,1890-1899		RAB4CQ473J
R	1870,1871,1876,1879		RAB4CQ470J
R	1872-1875		RAB4CQ680J
R	1880		RAB4CQ470J
R	1881,1882,9205-9208		RAB4CQ103J
R	1908		RS1/16SS1002D
R	1910		RS1/16SS2001D
R	1930,1933		ACN7169
R	1931		RS1/8SQR18J
R	1932		ACN7168
R	1941		RS1/16SS1502F
R	1942		RS1/16SS1202F
R	1945		RS1/16SS4702D
R	1946		RS1/16SS1502D
R	1949,1950,1952-1956		RS1/10SR0R0J
R	9004		RS1/16SS6800F
R	9030,9032-9040,9225		RAB4CQ473J
R	9226		RAB4CQ473J
R	9357-9360		RAB4CQ0R0J
Other Resistors			RS1/16SS###J

CAPACITORS

Mark	No.	Description	Part No.
C	101		CKSRYB103K50
C	102		CKSRYB104K50
C	103,332,333,506		CEVW101M16
C	104,106,113,116		CKSSYB104K10
C	114,121,614,664		CEVW470M6R3
C	115		CCSRCH471J50
C	117,510,592-596		CKSSYB102K50
C	118,120,216,222		CKSSYB104K10
C	119,361,364,541		CCSSCH471J16
C	122		CKSRYB474K10
C	123,124,338,482		CKSSYB103K16
C	215,221,231,241		CKSSYB471K50
C	232,242,251,253		CKSSYB104K10
C	252,255,257,281		CKSSYB471K50
C	254,256,258-260		CKSSYB104K10
C	264,272,282,292		CKSSYB104K10
C	291,301,304,307		CKSSYB471K50
C	302,303,305,306		CKSSYB104K10
C	308,310,312		CKSSYB104K10
C	309,311,313,317		CKSSYB471K50
C	314-316,318-320		CKSSYB104K10
C	321,323,325,328		CKSSYB471K50
C	322,324,326,327		CKSSYB104K10
C	329,336,343,345		CKSSYB104K10
C	337,344,367,369		CKSSYB471K50
C	362,365,368,370		CKSSYB104K10
C	363,366,1100,1101		CKSQYB475K6R3
C	371,376,453,503		CKSSYB471K50
C	372,375,454,502		CKSSYB104K10
C	460,806,815,817		CKSSYB105K6R3
C	487,488,527		CEVW220M16
C	501,581-584,871		CKSQYB225K10
C	504,508,521,522		CKSSYB104K10
C	505,1203,1801,1824		DCH1201
C	507,525,531-538		CKSSYB471K50
C	509,805,831		CEVW100M16
C	511,512,567,624		CKSSYB103K16
C	524		CEVW220M6R3
C	526,539,551,553		CKSSYB104K10
C	529,530		CKSSYB472K25
C	540,568,601,604		CKSSYB471K50
C	542,1344		CCSSCH471J16
C	543,1166,1612,9043		CKSRYB105K10
C	552,577,606,618		CEVW101M16
C	561-566,578,586		CKSSYB104K10
C	602,605,613,615		CKSSYB104K10
C	603,653,703,753		CKSQYB475K10
C	616,651,654,666		CKSSYB471K50
C	617,652,655,663		CKSSYB104K10
C	656,668,706,718		CEVW101M16
C	665,667,702,705		CKSSYB104K10
C	674,724,774,860		CKSSYB103K16
C	701,704,716,751		CKSSYB471K50
C	713,715,717,752		CKSSYB104K10
C	714,764,874,1115		CEVW470M6R3
C	754,766,1081,1516		CKSSYB471K50
C	755,763,765,767		CKSSYB104K10
C	756,768,1202,1307		CEVW101M16
C	804,816,822,825		CKSSYB102K50
C	807,859,862,865		CKSSYB104K16
C	812,813,826-830		CKSSYB104K10
C	814,823,834,846		CEVW101M4
C	818,820,1503,1944		CEVW221M4
C	819,821,824,835		CKSSYB105K6R3
C	832,856,879,1030		CKSQYB106K6R3
C	833,836,848,851		CKSSYB102K50
C	837-845,852,928		CKSSYB104K10
C	847,850,853,857		CKSSYB105K6R3
C	849,855,1014,1032		CEVW101M4
C	854,858,863,866		CKSSYB102K50
C	861,864,868,882		CKSSYB105K6R3
C	867,870,929,1006		CKSSYB102K50
C	869,872,873,875		CKSSYB104K16
C	876,1002,1010-1013		CKSSYB104K16
C	878,883,888,1252		CKSQYB225K10
C	880,939,1004,1005		CKSSYB103K16
C	884		CCSSCH221J50
C	885		CCSSCH331J50
C	886,891		CKSSYB473K10
C	887,937,938,1001		CKSSYB105K6R3
C	889,1201,1206		CCSSCH101J50
C	890		CCSSCH151J50
C	926,927,1266,1300		CCSSCH100D50
C	1003,1007,1015-1020		CKSSYB105K6R3
C	1008,1009,1025,1027		CKSSYB102K50

http://www.xiaoyu163.com

http://www.xiaoyu163.com

Mark	No.	Description	Part No.
	C	1021,1029,1052,1250	CKSSYB104K16
	C	1022,1026,1051,1053	CKSSYB105K6R3
	C	1023,1024,1114,1303	CKSSYB103K16
	C	1028,1050,1218,1253	CKSSYB102K50
	C	1031,1505,1507,1709	CKSQYB106K6R3
	C	1082,1156,1157,1172	CKSSYB104K10
	C	1103,1104,1106,1107	CKSQYB475K6R3
	C	1112,1113,1185-1187	CKSSYB105K6R3
	C	1151,1168,1176	CCSSCH5R0C50
	C	1152,1167,1175	CCSSCH4R0C50
	C	1153,1154,1169,1170	CCSSCH220J50
	C	1155,1171,1179	CCSSCH7R0D50
	C	1173,1180,1181,1204	CKSSYB104K10
	C	1177,1178	CCSSCH220J50
	C	1200,1205	CCSSCH560J50
	C	1207,1210,1213,1216	CKSSYB104K10
	C	1208,1212,1215,1625	CCSSCH470J50
	C	1209,1211,1214	CCSSCH390J50
	C	1217,1302,1305	CKSSYB104K10
	C	1254,1263,1313-1316	CKSSYB102K50
	C	1262,1802-1819,1821	CKSSYB104K16
	C	1267,1743	CCSSCH120J50
	C	1301,1306,1905	CKSRYB104K16
	C	1304,1742	CCSSCH100D50
	C	1308-1312,1317,1320	CKSSYB104K10
	C	1318,1319,1322,1324	CKSSYB102K50
	C	1321,1323,1325,1326	CKSSYB104K10
	C	1327,1329,1331	CKSSYB102K50
	C	1328,1330,1332-1335	CKSSYB104K10
	C	1336-1339,1347,1349	CKSSYB102K50
	C	1340,1415,1519,1708	CKSSYB103K16
	C	1341,1342,1346,1348	CKSSYB104K10
	C	1343,1501,1611,1705	CEVW101M16
	C	1354,1357,1372	CKSSYB104K10
	C	1355,1356,1407,1412	CKSSYB102K50
	C	1400-1406,1408,1410	CKSSYB104K10
	C	1411	CEAT102M16
	C	1417,1419,1510,1512	CKSSYB102K50
	C	1418,1502,1504,1509	CKSSYB104K10
	C	1506,1508,9003,9005	CKSSYB105K6R3
	C	1511,1515,1518,1520	CKSSYB104K10
	C	1513,1514	CCSSCH8R0D50
	C	1517,1521,1522,1525	CKSSYB471K50
	C	1523,1524,1527,1528	CKSSYB104K10
	C	1526,1529,1534,1536	CKSSYB471K50
	C	1530,1533,1540,1543	CKSSYB102K50
	C	1531,1532,1535,1537	CKSSYB104K10
	C	1538,1544,1575	CKSSYB471K50
	C	1539,1541,1542,1545	CKSSYB104K10
	C	1569,1619,1711,1730	CKSSYB102K50
	C	1570,1574,1613-1618	CKSSYB104K10
	C	1577	CEVW470M4
	C	1593,1594	CKSQYB475K6R3
	C	1601-1604,9047	CCSSCH102J50
	C	1620-1624,1634,1703	CKSSYB104K10
	C	1626	CCSSCH470J50
	C	1635-1644,1828,1830	CKSSYB471K50
	C	1704,1706,1710,1713	CKSSYB104K10
	C	1707	CKSSYB823K10

Mark	No.	Description	Part No.
	C	1712,1718,1721,1723	CKSQYB106K6R3
	C	1714,1725,1731,1835	CKSSYB103K16
	C	1715,1717,1719,1722	CKSSYB104K10
	C	1716,1720,1745,1800	CEVW101M16
	C	1724,1726-1729,1732	CKSSYB104K10
	C	1733,1741,1746,1748	CKSSYB104K10
	C	1735-1739,1744,1820	CKSSYB102K50
	C	1822,1858-1874,1878	CKSSYB102K50
	C	1823	CEVW221M6R3
	C	1825,9049	CEVW101M16
	C	1826	DCH1201
	C	1827,1829,1831,1833	CKSSYB104K10
	C	1832,1834,1837,1839	CKSSYB471K50
	C	1836,1838,1840,1842	CKSSYB104K10
	C	1841,1843,1845,1847	CKSSYB471K50
	C	1844,1846,1848,1877	CKSSYB104K10
	C	1849,9002,9004,9006	CKSSYB471K50
	C	1900	CEVW101M25
	C	1901	CKSQYB104K25
	C	1903,1904,1931,1932	CCG1195
	C	1906	CKSRYB153K25
	C	1907	CCSRCH681J50
	C	1908,1933,1934	CKSRYB104K25
	C	1909	CKSQYB105K16
	C	1910	BCG1059
	C	1912,1937,1941	CCSRCH102J50
	C	1914	CKSRYB103K25
	C	1916,1997,1998,9009	CKSSYB104K10
	C	1938,1942,1948	CKSQYB475K10
	C	1939,1943	CCG1233
	C	1945-1947	CKSRYB104K25
	C	1949,1950,1990,1993	CKSSYB102K50
	C	1952,1958	CKSRYB223K16
	C	1953,1957	CCSRCH561J50
	C	1959	CCSRCH101J50
	C	1994,9022,9051,9053	CKSSYB102K50
	C	9001	DCH1165
	C	9007,9011,9017,9019	CKSSYB105K6R3
	C	9008,9010,9012,9014	CKSSYB471K50
	C	9013,9015,9026,9031	CKSSYB104K10
	C	9016,9018,9021,9027	CKSSYB471K50
	C	9020	CKSSYB104K16
	C	9023-9025	CKSQYB106K6R3
	C	9028,9029	CKSSYB105K6R3
	C	9030,9032	CKSSYB471K50
	C	9035-9042	VCG1066
	C	9044	CKSRYB105K10
	C	9048	CKSSYB103K16
	C	9050,9052,9054	CKSSYB104K10
	C	9055,9155	CKSSYB102K50

D DIGITAL MAIN ASSY (VSX-919AH)

SEMICONDUCTORS

IC	101	AK4114VQ
IC	215,1081,1306,9003	TC7SH08FUS1
IC	221,231,9002	TC74VHC157FTS1
IC	241,1403,1405	TC74VHC125FTS1
IC	251	K4S641632N-LC60

http://www.xiaoyu163.com

http://www.xiaoyu163.com

Mark	No.	Description	Part No.
	IC 261		AYW7302
	IC 271		TC7SH32FUS1
	IC 281,291		TC74LCX573FTS1
	IC 301		DSPA56720AG
	IC 361		TC74VHC04FTS1
	IC 363		TC7WH126FU
	IC 364		TC7SZ08FU
	IC 391,1407		TC74VHC08FTS1
	IC 452,1801-1803,1805		TC74LCX541FTS1
	IC 501		AK5358AET
⚠	IC 581		NJM2885DL1-33
⚠	IC 582		RP131H101D
	IC 602,652,702,752		WM8728SEDS
	IC 800		UPD61283F1-407LU2A
	IC 801,802		NJM12904V
	IC 803,1302,1702		TC7WHU04FU
	IC 1000,1001		K4H561638J-LCB3
	IC 1050		AYW7303
⚠	IC 1100,1101		S-1170B33UC-OTS
⚠	IC 1102		S-1170B25UC-OTK
⚠	IC 1104		MM1701WH
⚠	IC 1250,9001		AAT4614AIGU-2
	IC 1251		TC7PAU04FU
	IC 1300		PE7008A
	IC 1301		341S2164
⚠	IC 1303		S-1132B25-U5
	IC 1304,1305		BU4094BCFV
	IC 1401		TC74VHC126FTS1
	IC 1402,1408		TC74VHCT08AFTS1
	IC 1404		TC74VHC02FTS1
	IC 1406		TC74VHCT125AFTS1
	IC 1501		SII9233ACTU
	IC 1563		TC7WH157FU
	IC 1566		TC74VHC541FTS1
⚠	IC 1592		R1172H121B
	IC 1605		TC74VHC153FT
	IC 1701		ADV7181CBSTZ
	IC 1804,1806		TC7SZ125FU
	IC 1807-1811		TC74VCX541FT
	IC 1813		TC7SA08FU
⚠	IC 1900		TPS54350PWP
⚠	IC 1930		LTC3850EGN
	IC 9000		SII9134CTU
	Q 241,552		DTC124EUA
	Q 551		RTQ025P02
	Q 800,801,1150,1154		2SA1576A
	Q 1151,1155,1157,1998		2SC4081
	Q 1156,1200-1204,1405		2SA1576A
	Q 1300,1401-1404		DTA124EUA
	Q 1400		DTC114EUA
	Q 1408,1999		RN4903
⚠	Q 1900		RTQ045N03
⚠	Q 1930,1931		SP8K1
	Q 9000		UMB1N
	Q 9001		DTC114YUA
	D 484		1SS302
	D 501		MA152WA
	D 502		MA152WK
	D 551,1997		1SS352

Mark	No.	Description	Part No.
	D 582		1SR154-400
	D 1200		RR264M-400
	D 1400		RB501V-40
	D 1402,1506,1509,1512		DAN202U
	D 1930,1931		RB160VA-40
	D 1998		DAP202U
	D 1999		UDZS5R6(B)
	D 9000		UDZS5R1(B)

MISCELLANEOUS

L	101-103 CHIP SOLID INDUCTOR	QTL1013
L	215,221 CHIP SOLID INDUCTOR	QTL1013
L	231,241 CHIP SOLID INDUCTOR	QTL1013
L	251,261 CHIP SOLID INDUCTOR	QTL1013
L	281,291 CHIP SOLID INDUCTOR	QTL1013
L	301-303 CHIP SOLID INDUCTOR	QTL1013
L	361-365 CHIP SOLID INDUCTOR	QTL1013
L	367,452 CHIP SOLID INDUCTOR	QTL1013
L	475-483,1800-1810 INDUCTOR	CTF1473
L	501,502 CHIP SOLID INDUCTOR	QTL1013
L	551,601 CHIP SOLID INDUCTOR	QTL1013
L	561,562 CHIP SOLID INDUCTOR	ATL7002
L	602,651 CHIP SOLID INDUCTOR	QTL1013
L	652,701 CHIP SOLID INDUCTOR	QTL1013
L	702,751 CHIP SOLID INDUCTOR	QTL1013
L	752,810 CHIP SOLID INDUCTOR	QTL1013
L	800 INDUCTOR	LCTC150K2125
L	801-805,808,809 EMI FILTER	DTL1106
L	806 CHIP COIL	LCYA390J2520
L	807 INDUCTOR	LCYA150J2520
L	1081,1251 CHIP SOLID INDUCTOR	QTL1013
L	1100,1302,1303 CHIP BEADS	ATL7010
L	1150,1154,1156 INDUCTOR	ATL7035
L	1151,1155,1157 INDUCTOR	ATL7033
L	1200,1201 INDUCTOR	LCTC100K2125
L	1202-1204 INDUCTOR	LCTC4R7K2125
L	1250 COIL	ATH7079
L	1272,1402-1409 FERRITE BEAD	CTF1528
L	1300,1301 CHIP SOLID INDUCTOR	QTL1013
L	1304,1505 CHIP SOLID INDUCTOR	QTL1013
L	1501-1504,1701,1702 CHIP BEADS	ATL7010
L	1506,1563 CHIP SOLID INDUCTOR	QTL1013
L	1566,1703 CHIP SOLID INDUCTOR	QTL1013
L	1704,9011 CHIP SOLID INDUCTOR	QTL1013
L	1706 INDUCTOR	CTF1295
L	1812 INDUCTOR	CTF1473
L	1900,1902,1903,1930 CHIP BEADS	ATL7010
L	1901 INDUCTOR	CTH1255
L	1931 INDUCTOR	ATH7074
L	1932 INDUCTOR	ATH7073
L	9000-9003,9008 CHIP BEADS	ATL7010
L	9004-9007 COIL	ATH7064
L	9010,9013 INDUCTOR	CTF1386
L	9012 CHIP SOLID INDUCTOR	QTL1013
F	800-803 EMI FILTER	DTL1106
JA	102 JACK	VKB1244
JA	103,105 OPT. LINK IN	GP1FAV51RKBF
JA	481 SOCKET	BKP1127
JA	1602-1604,9000 HDMI CONNECTOR	AKP7224
KN	481 SCREW PLATE	VNE1948

http://www.xiaoyu163.com

http://www.xiaoyu163.com

Mark	No.	Description	Part No.
	KN 1300,1301	EARTH METAL FITTING	VNF1109
	KN 1304	EARTH METAL FITTING	VNF1109
	X 361	CRYSTAL (22.5792 MHz)	ASS7071
	X 362	CRYSTAL (24.576 MHz)	ASS7072
	X 801,1501	CRYSTAL (27.000 MHz)	ASS7092
	X 1250	CRYSTAL (48 MHz)	ASS7099
	X 1300	CRYSTAL (26.864 MHz)	ASS7094
	X 1701	CRYSTAL (28.63636 MHz)	ASS7096
	CN 482	15P SOCKET	XKP3078
	CN 501	23P SOCKET	XKP3082
	CN 1250,1254	CONNECTOR	CKS4573
	CN 1252	19P SOCKET	XKP3080
	CN 1259	CONNECTOR	AKM1276
	CN 1400	13P SOCKET	XKP3077
	CN 1405	31P CONNECTOR	VKN1262
	CN 1903	PLUG(4P)	KM200NA4
	CN 1904	CONNECTOR	B4B-EH
	JH 1900	PCB BINDER	VEF1040

RESISTORS

Mark	No.	Description	Part No.
	R 119,221,223,225		RAB4CQ101J
	R 121		RS1/16SS1802F
	R 126,132,133,575		RS1/10SR0R0J
	R 227,231,232,234		RAB4CQ101J
	R 233,253,254,256		RAB4CQ470J
	R 257,316-318,320		RAB4CQ470J
	R 283,284,293,294		RAB4CQ101J
	R 312,1582,1869		RAB4CQ680J
	R 321,622,672,722		RAB4CQ470J
	R 332,457,458,601		RAB4CQ101J
	R 347,834,905-908		RAB4CQ103J
	R 348		RAB4CQ220J
	R 434,861,863,864		RAB4CQ0R0J
	R 552		RS1/4SA4R7J
	R 581,804,826,1150		RS1/10SR0R0J
	R 651,701,751,1320		RAB4CQ101J
	R 772,1539,1703-1705		RAB4CQ470J
	R 806		RS1/16SS6800D
	R 807		RS1/16SS4700D
	R 813,815		RS1/10SR43R0D
	R 814,816		RS1/10SR1000D
	R 820		RS1/10SR4700F
	R 821,822,824,825		RS1/10SR1001F
	R 855,857,926,1334		RAB4CQ473J
	R 875,879		RAB4CQ221J
	R 927,1050-1053,1306		RAB4CQ103J
	R 977,978,993,994		RAB4CQ0R0J
	R 1003,1004,1007,1008		RAB4CQ330J
	R 1010,1011,1015,1016		RAB4CQ330J
	R 1020,1021,1024,1025		RAB4CQ330J
	R 1027,1028,1032,1033		RAB4CQ330J
	R 1039-1041,1045		RAB4CQ560J
	R 1152,1170,1179,1200		RS1/16SS2200F
	R 1153,1173,1180		RS1/16SS5601F
	R 1202,1268,1721,1722		RS1/10SR0R0J
	R 1203,1209		RS1/16SS4700F
	R 1206,1211,1216,1221		RS1/16SS2200F
	R 1212,1217,1222		RS1/16SS56R0F
	R 1214,1219,1224		RS1/16SS3300F
	R 1347-1350		RAB4CQ101J
	R 1355,1555,1556,1856		RAB4CQ473J
	R 1363		RAB4CQ104J
	R 1406,1916		RS1/10SR100J
	R 1525-1530,1532-1536		RAB4CQ100J
	R 1707,1716,1717		RAB4CQ470J
	R 1828-1837,9357-9360		RAB4CQ0R0J
	R 1838-1840,1852,1853		RAB4CQ470J
	R 1858-1866,1890-1899		RAB4CQ473J
	R 1867,1868,1870,1871		RAB4CQ470J
	R 1872-1875		RAB4CQ680J
	R 1876,1879,1880		RAB4CQ470J
	R 1881,1882,9205-9208		RAB4CQ103J
	R 1908		RS1/16SS1002D
	R 1910		RS1/16SS2001D
	R 1930,1933		ACN7169
	R 1931		RS1/8SQR18J
	R 1932		ACN7168
	R 1934,1949,1950		RS1/10SR0R0J
	R 1941		RS1/16SS1502F
	R 1942		RS1/16SS1202F
	R 1945		RS1/16SS4702D
	R 1946		RS1/16SS1502D
	R 1952-1956		RS1/10SR0R0J
	R 9004		RS1/16SS6800F
	R 9030,9032-9040,9225		RAB4CQ473J
	R 9226		RAB4CQ473J
	Other Resistors		RS1/16SS###J

CAPACITORS

Mark	No.	Description	Part No.
	C 101		CKSRYB103K50
	C 102		CKSRYB104K50
	C 103,332,333,506		CEVW101M16
	C 104,106,113,116		CKSSYB104K10
	C 114,121,614,664		CEVW470M6R3
	C 115		CCSRCH471J50
	C 117,510,592-596		CKSSYB102K50
	C 118,120,216,222		CKSSYB104K10
	C 119,361,364,1344		CCSSCH471J16
	C 122		CKSRYB474K10
	C 123,338,482,511		CKSSYB103K16
	C 215,221,231,241		CKSSYB471K50
	C 232,242,251,253		CKSSYB104K10
	C 252,255,257,281		CKSSYB471K50
	C 254,256,258-260		CKSSYB104K10
	C 264,272,282,292		CKSSYB104K10
	C 291,301,304,307		CKSSYB471K50
	C 302,303,305,306		CKSSYB104K10
	C 308,310,312		CKSSYB104K10
	C 309,311,313,317		CKSSYB471K50
	C 314-316,318-320		CKSSYB104K10
	C 321,323,325,328		CKSSYB471K50
	C 322,324,326,327		CKSSYB104K10
	C 329,336,343,345		CKSSYB104K10
	C 337,344,367,369		CKSSYB471K50
	C 362,365,368,370		CKSSYB104K10
	C 363,366,1100,1101		CKSQYB475K6R3
	C 371,376,453,503		CKSSYB471K50
	C 372,375,454,502		CKSSYB104K10
	C 487,488		CEVW220M16

http://www.xiaoyu163.com

http://www.xiaoyu163.com

Mark	No.	Description	Part No.
C	501,581-584,871		CKSQYB225K10
C	504,508,551		CKSSYB104K10
C	505,1203		DCH1201
C	507,531-538,568		CKSSYB471K50
C	509,805,831		CEVW100M16
C	512,567,624,674		CKSSYB103K16
C	552,577,606,618		CEVW101M16
C	561-566,578,586		CKSSYB104K10
C	601,604,616,651		CKSSYB471K50
C	602,605,613,615		CKSSYB104K10
C	603,653,703,753		CKSQYB475K10
C	617,652,655,663		CKSSYB104K10
C	654,666,701,704		CKSSYB471K50
C	656,668,706,718		CEVW101M16
C	665,667,702,705		CKSSYB104K10
C	713,715,717,752		CKSSYB104K10
C	714,764,874,1115		CEVW470M6R3
C	716,751,754,766		CKSSYB471K50
C	724,774,860,880		CKSSYB103K16
C	755,763,765,767		CKSSYB104K10
C	756,768,1202,1307		CEVW101M16
C	804,816,822,825		CKSSYB102K50
C	806,815,817,819		CKSSYB105K6R3
C	807,859,862,865		CKSSYB104K16
C	812,813,826-830		CKSSYB104K10
C	814,823,834,846		CEVW101M4
C	818,820,1503,1944		CEVW221M4
C	821,824,835,847		CKSSYB105K6R3
C	832,856,879,1030		CKSQYB106K6R3
C	833,836,848,851		CKSSYB102K50
C	837-845,852,928		CKSSYB104K10
C	849,855,1014,1032		CEVW101M4
C	850,853,857,861		CKSSYB105K6R3
C	854,858,863,866		CKSSYB102K50
C	864,868,882,887		CKSSYB105K6R3
C	867,870,929,1006		CKSSYB102K50
C	869,872,873,875		CKSSYB104K16
C	876,1002,1010-1013		CKSSYB104K16
C	878,883,888,1252		CKSQYB225K10
C	884		CCSSCH221J50
C	885		CCSSCH331J50
C	886,891		CKSSYB473K10
C	889,1201,1206		CCSSCH101J50
C	890		CCSSCH151J50
C	926,927,1266,1300		CCSSCH100D50
C	937,938,1001,1003		CKSSYB105K6R3
C	939,1004,1005,1023		CKSSYB103K16
C	1007,1015-1020,1022		CKSSYB105K6R3
C	1008,1009,1025,1027		CKSSYB102K50
C	1021,1029,1052,1250		CKSSYB104K16
C	1024,1114,1303,1340		CKSSYB103K16
C	1026,1051,1053,1112		CKSSYB105K6R3
C	1028,1050,1218,1253		CKSSYB102K50
C	1031,1505,1507,1709		CKSQYB106K6R3
C	1081,1516,1517,1521		CKSSYB471K50
C	1082,1156,1157,1172		CKSSYB104K10
C	1103,1104,1106,1107		CKSQYB475K6R3
C	1113,1185-1187,1506		CKSSYB105K6R3
C	1151,1168,1176		CCSSCH5R0C50
C	1152,1167,1175		CCSSCH4R0C50

Mark	No.	Description	Part No.
C	1153,1154,1169,1170		CCSSCH220J50
C	1155,1171,1179		CCSSCH7R0D50
C	1166,9043,9044		CKSRYB105K10
C	1173,1180,1181,1204		CKSSYB104K10
C	1177,1178		CCSSCH220J50
C	1200,1205		CCSSCH560J50
C	1207,1210,1213,1216		CKSSYB104K10
C	1208,1212,1215		CCSSCH470J50
C	1209,1211,1214		CCSSCH390J50
C	1217,1302,1305		CKSSYB104K10
C	1254,1263,1313-1316		CKSSYB102K50
C	1262,9020		CKSSYB104K16
C	1267,1743		CCSSCH120J50
C	1301,1306,1905		CKSRYB104K16
C	1304,1742		CCSSCH100D50
C	1308-1312,1317,1320		CKSSYB104K10
C	1318,1319,1322,1324		CKSSYB102K50
C	1321,1323,1325,1326		CKSSYB104K10
C	1327,1329,1331		CKSSYB102K50
C	1328,1330,1332-1335		CKSSYB104K10
C	1336-1339,1347,1349		CKSSYB102K50
C	1341,1342,1346,1348		CKSSYB104K10
C	1343,1501,1705,1716		CEVW101M16
C	1354,1357,1372		CKSSYB104K10
C	1355,1356,1407,1412		CKSSYB102K50
C	1400-1406,1408,1410		CKSSYB104K10
C	1411		CEAT102M16
C	1415,1519,1708,1714		CKSSYB103K16
C	1417,1419,1510,1512		CKSSYB102K50
C	1418,1502,1504,1509		CKSSYB104K10
C	1508,9003,9005,9007		CKSSYB105K6R3
C	1511,1515,1518,1520		CKSSYB104K10
C	1513,1514		CCSSCH8R0D50
C	1522,1525,1526,1529		CKSSYB471K50
C	1523,1524,1527,1528		CKSSYB104K10
C	1530,1533,1540,1543		CKSSYB102K50
C	1531,1532,1535,1537		CKSSYB104K10
C	1534,1536,1538,1544		CKSSYB471K50
C	1539,1541,1542,1545		CKSSYB104K10
C	1569,1711,1730		CKSSYB102K50
C	1570,1574,1634,1703		CKSSYB104K10
C	1575,1828,1830,1832		CKSSYB471K50
C	1577		CEVW470M4
C	1593,1594		CKSQYB475K6R3
C	1602-1604,9047		CCSSCH102J50
C	1704,1706,1710,1713		CKSSYB104K10
C	1707		CKSSYB823K10
C	1712,1718,1721,1723		CKSQYB106K6R3
C	1715,1717,1719,1722		CKSSYB104K10
C	1720,1745,9049		CEVW101M16
C	1724,1726-1729,1732		CKSSYB104K10
C	1725,1731,9048		CKSSYB103K16
C	1733,1741,1746,1748		CKSSYB104K10
C	1735-1739,1744,1878		CKSSYB102K50
C	1827,1829,1831,1833		CKSSYB104K10
C	1834,1837,1839,1841		CKSSYB471K50
C	1836,1838,1840,1842		CKSSYB104K10
C	1843,1845,1847,1849		CKSSYB471K50
C	1844,1846,1848,1877		CKSSYB104K10

http://www.xiaoyu163.com

http://www.xiaoyu163.com

Mark	No.	Description	Part No.
	C 1900		CEVW101M25
	C 1901		CKSQYB104K25
	C 1903,1904,1931,1932		CCG1195
	C 1906		CKSRYB153K25
	C 1907		CCSRCH681J50
	C 1908,1933,1934		CKSRYB104K25
	C 1909		CKSQYB105K16
	C 1910		BCG1059
	C 1912,1937,1941		CCSRCH102J50
	C 1914		CKSRYB103K25
	C 1916,1997,1998,9009		CKSSYB104K10
	C 1938,1942,1948		CKSQYB475K10
	C 1939,1943		CCG1233
	C 1945-1947		CKSRYB104K25
	C 1949,1950,1990,1993		CKSSYB102K50
	C 1952,1958		CKSRYB223K16
	C 1953,1957		CCSRCH561J50
	C 1959		CCSRCH101J50
	C 1994,9022,9051,9053		CKSSYB102K50
	C 9001		DCH1165
	C 9002,9004,9006,9008		CKSSYB471K50
	C 9010,9012,9014,9016		CKSSYB471K50
	C 9011,9017,9019,9028		CKSSYB105K6R3
	C 9013,9015,9026,9031		CKSSYB104K10
	C 9018,9021,9027,9030		CKSSYB471K50
	C 9023-9025		CKSQYB106K6R3
	C 9029		CKSSYB105K6R3
	C 9032		CKSSYB471K50
	C 9035-9042		VCG1066
	C 9050,9052,9054		CKSSYB104K10
	C 9055,9155		CKSSYB102K50

E POWER PACK ASSY

SEMICONDUCTORS

Mark	No.	Description	Part No.
⚠	IC 5001,5002		PAC014A
⚠	IC 5003		PAC015A
⚠	IC 5004		AEK7063
⚠	IC 5401,5402		ICP-N10
	Q 5001-5003,5005-5008		2SC5938A
	Q 5009-5011,5013-5016		2SC2240
	Q 5019,5505-5507		LTA124EUB
	Q 5020,5407		LTC124EUB
⚠	Q 5401		2SC5511
⚠	Q 5402		2SA2005
	Q 5403,5405		2SA1145
	Q 5404,5408		2SC2240
	Q 5410,5501-5504		LSC4081UB
	Q 5508-5511		DTC114TUA
	D 5001-5003,5005-5011		1SS133
	D 5013,5014,5016,5401		1SS133
	D 5015,5017-5031		1SS355
⚠	D 5301		D5SBA20(B)
⚠	D 5302		PTZ20(B)
⚠	D 5303		MTZJ10(B)

MISCELLANEOUS

Mark	No.	Description	Part No.
	L 5001-5003,5005-5008	COIL	ATH1004
	J 5301	JUMPER WIRE	D20PYY0630E
	J 5302	JUMPER WIRE	D20PYY0215E
	J 5303	JUMPER WIRE	D20PYY0325E
	J 5304	PARALLEL WIRE	D20PYY0625E
	JA 5001	SP TERMINAL 8-P(V0)	XKE3039
	JA 5002	SP TERMINAL 6-P(V0)	XKE3040
	KN 5001	WRAPPING TERMINAL	VNF1084
	RY 5001-5004	RELAY	ASR7001
	CN 5001,5002	19P PLUG	XKP3069
	CN 5004	9P PLUG	XKP3064
	JH 5001,5002	PCB BINDER	VEF1040
	JH 5301,5304	6P CABLE HOLDER	51048-0600
	JH 5302	2P CABLE HOLDER	51048-0200
	JH 5303	3P CABLE HOLDER	51048-0300
	JP 5301	BOARD IN JUMPER	DB216NB0
	JP 5302	BOARD IN JUNPER	DB016NB0

RESISTORS

Mark	No.	Description	Part No.
	R 5009-5011,5013-5016		RS1/10SR103J
	R 5023		RS1/10SR563J
	R 5031,5071		RS1/10SR182J
	R 5041-5043,5108		RS1/10SR683J
	R 5048,5114,5115,5418		RS1/10SR103J
⚠	R 5057-5059,5061-5064		ACN7094
	R 5079		RS1/10SR821J
	R 5087,5419		RS1/10SR333J
⚠	R 5089-5091,5093-5096		RD1/4PUF101J
⚠	R 5097-5099,5101-5104		RS1LMF4R7J
	R 5105-5107,5109-5112		RS1/10SR472J
	R 5113		RS1/10SR473J
	R 5117,5119,5120,5417		RS1/10SR0R0J
	R 5301		RD1/4MUF100J
	R 5303		RS2LMF242J
	R 5305,5306		RS2LMF331J
⚠	R 5421,5422		RS3LMF681J
	R 5423,5424,5502		RS1/10SR103J
	R 5501		RS1/10SR682J
	Other Resistors		RD1/4PU###J

CAPACITORS

Mark	No.	Description	Part No.
	C 5001-5003,5005-5008		CKSRYB331K50
	C 5009-5011,5013-5016		CEAT4R7M50
	C 5017-5019,5021-5024		CCSRCH470J50
	C 5025-5027,5029-5032		CEAT101M16
	C 5041-5043,5045-5048		CCSRCJ3R0C50
	C 5049-5051,5053-5056		CEANP2R2M50
	C 5057-5059,5061-5067		CFTLA224J50
	C 5069-5072		CFTLA224J50
	C 5073-5075,5077-5080		CFTLA123J2A
	C 5081,5082,5086		CKSRYB272K50
	C 5087,5088,5091,5092		CEAT1R0M2A
	C 5089,5090,5093,5094		CEAT330M2A
	C 5095,5096		CEAT1R0M2A
	C 5097,5098		CEAT330M2A
	C 5099		CEAT101M25
	C 5301,5302		XCH3032
	C 5303,5309		CFTLA104J2A
	C 5305		CEAT101M35
	C 5306		CEAT101M16
	C 5307,5308,5310,5311		CEANP470M25
	C 5401,5402		CEAT100M2A
	C 5501,5503		CKSRYB102K50
	C 5502,5504		CEAT221M6R3

http://www.xiaoyu163.com

http://www.xiaoyu163.com

Mark	No.	Description	Part No.

F IR/SR ASSY

MISCELLANEOUS

L	4841,4853	CHIP SOLID INDUCTOR	QTL1013
L	4854	CHIP SOLID INDUCTOR	QTL1013
L	4861,4871	INDUCTOR	CTF1473
L	4862	INDUCTOR	CTF1385
JA	4841,4851,4861,4871	JACK	VKB1243
KN	4841	SCREW PLATE	VNE1948
CN	4801	9P SOCKET	XKP3075

RESISTORS

	All Resistors		RS1/10SR###J

CAPACITORS

C	4842,4862		CCSRCH471J50
C	4843,4861		CKSRYB104K16
C	4844,4863		CKSRYB103K50

G BRIDGE 2 ASSY

MISCELLANEOUS

CN	7611	L-PLUG(6P)	KM200NA6L
CN	7612	15P PLUG	XKP3067
CN	7613	19P PLUG	XKP3069
CN	7614,7615	23P PLUG	XKP3071

CAPACITORS

C	7611,7612		CCSRCH102J50

H BRIDGE 1 ASSY

MISCELLANEOUS

CN	7601,7602	13P PLUG	XKP3066
JH	7601	PCB BINDER	VEF1040

I BIND 1 ASSY

MISCELLANEOUS

JH	7711,7712	PCB BINDER	VEF1040

J BIND 2 ASSY

MISCELLANEOUS

JH	7721-7725	PCB BINDER	VEF1040

K BIND 3 ASSY

MISCELLANEOUS

CN	7731	6PJUMPER CONNECTOR	52151-0610
CN	7732	6P JUMPER CONNECTOR	52147-0610
JH	7731	PCB BINDER	VEF1040

L BIND 4 ASSY

MISCELLANEOUS

CN	7741	3PJUMPER CONNECTOR	52151-0310
CN	7742	3P JUMPER CONNECTOR	52147-0310
JH	7741,7742	PCB BINDER	VEF1040

M BIND 5 ASSY

MISCELLANEOUS

JH	7721	PCB BINDER	VEF1040

N V6 FRONT INPUT ASSY

MISCELLANEOUS

IC	3651	(B,289,33) DUAL OP-AMP	NJM4565MD
D	3651	(B,304,40) DIODE	HZU5R1(B2)
D	3653	(B,301,16) DIODE	HZU5R1(B2)
D	3654	(B,299,16) DIODE	HZU5R1(B2)
J	3601	(A,186,19) 5P SHIELDED CABLE	XDX3084
J	3651	(A,207,26) 5P SHIELDED CABLE	XDX3083
JA	3601	(A,216,11) JACK	XKB3056
JA	3651	(A,257,14) 3P PIN JACK	XKB3063
JA	3652	(A,289,14) MIC JACK	XKN3012
KN	3601	(A,231,18) WRAPPING TERMINAL	VNF1084
KN	3661	(A,310,18) WRAPPING TERMINAL	VNF1084
CN	3652	(A,307,23) CONNECTOR	9604S-05C
	3602	(A,269,29) PCB BINDER	VEF1040

RESISTORS

R	3601	(B,201,15)	RS1/10SR0R0J
R	3602	(B,201,17)	RS1/10SR0R0J
R	3603	(B,201,19)	RS1/10SR0R0J
R	3604	(B,201,22)	RS1/10SR0R0J
R	3606	(B,183,27)	RS1/10SR0R0J
R	3608	(B,181,27)	RS1/10SR0R0J
R	3609	(B,222,23)	RS1/10SR2R2J
R	3651	(B,242,13)	RS1/10SR75R0F
R	3652	(B,254,16)	RS1/10SR331J
R	3653	(B,269,16)	RS1/10SR331J
R	3654	(B,249,16)	RS1/10SR474J
R	3655	(B,266,16)	RS1/10SR474J
R	3656	(B,278,18)	RS1/10SR102J
R	3657	(B,273,38)	RS1/10SR682J
R	3658	(B,292,13)	RS1/10SR104J
R	3659	(B,283,39)	RS1/10SR104J
R	3660	(B,285,39)	RS1/10SR432J
R	3662	(B,303,35)	RS1/10SR102J
R	3663	(B,276,38)	RS1/10SR101J
R	3664	(B,289,40)	RS1/10SR333J
R	3665	(B,285,33)	RS1/10SR101J
R	3666	(B,291,27)	RS1/10SR333J
R	3667	(B,284,29)	RS1/10SR432J
R	3668	(B,299,26)	RS1/10SR101J
R	3669	(B,299,24)	RS1/10SR104J
R	3671	(B,217,23)	RS1/10SR0R0J
R	3672	(B,220,19)	RS1/10SR0R0J
R	3673	(B,222,19)	RS1/10SR0R0J

CAPACITORS

C	3601	(B,193,14)	CKSRYB104K16

http://www.xiaoyu163.com

http://www.xiaoyu163.com

Mark	No.	Description	Part No.
	C 3602	(A,190,16)	CEAT221M16
	C 3652	(B,257,13)	CCSRCH101J50
	C 3653	(B,272,13)	CCSRCH101J50
	C 3654	(B,251,16)	CCSRCH101J50
	C 3655	(B,264,16)	CCSRCH101J50
	C 3656	(B,229,22)	CKSRYB103K50
	C 3657	(B,227,22)	CKSRYB471K50
	C 3658	(B,231,21)	CKSRYB224K16
	C 3659	(B,247,27)	CKSRYB103K50
	C 3660	(B,242,27)	CKSRYB471K50
	C 3661	(B,245,27)	CKSRYB224K16
	C 3662	(B,301,9)	CKSRYB103K50
	C 3663	(B,297,9)	CKSRYB104K50
	C 3665	(B,290,13)	CKSRYB471K50
	C 3666	(B,281,39)	CCSRCH101J50
	C 3667	(A,278,30)	CEAT100M50
	C 3670	(A,306,38)	CEAT100M50
	C 3671	(B,291,25)	CCSRCH330J50
	C 3672	(B,294,31)	CKSRYB103K50
	C 3673	(B,294,37)	CKSRYB103K50
	C 3674	(A,298,31)	CEAT100M50
	C 3675	(A,298,40)	CEAT100M50
	C 3676	(A,299,21)	CEAT100M50
	C 3677	(B,289,42)	CCSRCH330J50

O V6 JOG ASSY

MISCELLANEOUS

S 3501	(A,22,28)	ROTARY ENCODER	XSX3009
CN 3501	(A,38,58)	3P JUMPER CONNECTOR	52147-0310

CAPACITORS

C 3501	(B,33,52)		CKSRYB103K50
C 3502	(B,33,59)		CKSRYB103K50

P V6 POWER SW ASSY

MISCELLANEOUS

Q 3401	(B,27,89)	TRANSISTOR	LTC143EUB
D 3402	(A,18,90)	LED(BLUE)	SLR343BC4T(JKLM)
S 3401	(A,21,80)	SWITCH	VSG1024
CN 3401	(A,39,87)	4P JUMPER CONNECTOR	52147-0410

RESISTORS

R 3401	(B,25,89)		RS1/10SR221J

Q V6 H.P ASSY

MISCELLANEOUS

Q 3451	(B,321,72)	TRANSISTOR	2SC5938A
Q 3452	(B,315,85)	TRANSISTOR	2SC5938A
JA 3451	(A,285,101)	HEADPHONE JACK	XKB3066
KN 3451	(A,278,70)	WRAPPING TERMINAL	VNF1084
3451	(A,281,54)	6P CABLE HOLDER	51048-0600

RESISTORS

R 3453	(B,305,70)		RS1/10SR472J
R 3454	(B,303,70)		RS1/10SR472J
⚠ R 3455	(A,309,89)	METAL OXIDE RESISTOR	RS1LMF151J
⚠ R 3456	(A,321,81)	METAL OXIDE RESISTOR	RS1LMF151J
R 3457	(B,283,58)		RS1/10SR102J

CAPACITORS

C 3453	(B,309,83)		CKSRYB223K50
C 3454	(B,324,82)		CKSRYB223K50
C 3457	(B,289,96)		CKSRYB104K16
C 3458	(B,278,92)		CKSRYB103K50
C 3459	(B,281,92)		CCSRCH471J50
C 3460	(B,279,58)		CKSRYB104K16

R V6 DISPLAY ASSY

MISCELLANEOUS

IC 3001	(B,141,211)	DISPLAY U-COM	PE5615A
IC 3003	(B,300,155)	IC	S-1200B33-M5
IC 3004	(B,284,201)	MICROCOMPUTER IC	PDC188B8
IC 3005	(B,253,205)	RESET IC	BU4842F
Q 3001	(B,240,228)	TRANSISTOR	LSA1576UB
Q 3002	(B,235,213)	TRANSISTOR	LTC124EUB
Q 3004	(B,304,169)	MOS FET	SSM3K15FU
Q 3005	(B,191,189)	TRANSISTOR	LTC143EUB
Q 3007	(B,71,189)	TRANSISTOR	LTC143EUB
Q 3008	(B,88,189)	TRANSISTOR	LTC143EUB
Q 3009	(B,150,178)	TRANSISTOR	LTC143EUB
Q 3010	(B,225,225)	TRANSISTOR	RT3T22M
D 3001	(B,247,227)	DIODE	1SS355
D 3002	(B,322,222)	DIODE	MC2848-11
D 3003	(B,318,228)	DIODE	1SS355
D 3004	(B,247,222)	DIODE	1SS355
D 3005	(B,233,212)	DIODE	MC2848-11
D 3006	(B,302,169)	DIODE	RB751V-40
D 3007	(A,195,186)	LED(RED)	SLR-343VC(NPQ)
D 3011	(A,75,186)	LED(RED)	SLR-343VC(NPQ)
D 3013	(A,92,186)	LED(RED)	SLR-343VC(NPQ)
D 3015	(A,135,186)	LED(BLUE)	SLR343BC4T(JKLM)
D 3017	(B,319,222)	DIODE	MC2848-11
D 3018	(B,324,171)	DIODE	DAN217U
D 3021	(B,321,158)	DIODE	DAN217U
D 3022	(B,289,163)	DIODE	DAN217U
L 3002	(B,317,232)	CHIP SOLID INDUCTOR	ATL7002
KN 3001	(A,135,195)	FL HOLDER(FE)	VNF1096
KN 3002	(A,317,131)	WRAPPING TERMINAL	VNF1084
V 3001	(A,196,231)	FL TUBE DISPLAY	AAV7115
S 3001	(A,59,161)	SWITCH	VSG1024
S 3002	(A,85,161)	SWITCH	VSG1024
S 3003	(A,106,161)	SWITCH	VSG1024
S 3004	(A,122,161)	SWITCH	VSG1024
S 3005	(A,164,161)	SWITCH	VSG1024
S 3006	(A,185,161)	SWITCH	VSG1024
S 3007	(A,22,185)	SWITCH	VSG1024
S 3008	(A,253,185)	SWITCH	VSG1024
S 3009	(A,51,185)	SWITCH	VSG1024
S 3010	(A,214,185)	SWITCH	VSG1024
S 3011	(A,234,202)	SWITCH	VSG1024
S 3012	(A,231,185)	SWITCH	VSG1024
S 3013	(A,34,185)	SWITCH	VSG1024
S 3014	(A,206,161)	SWITCH	VSG1024
S 3024	(A,299,144)	ROTARY ENCODER	XSX3005
X 3001	(A,169,197)	CERAMIC RESONATOR (5 MHz)	VSS1142
X 3002	(A,262,212)	CRYSTAL (15.0 MHz)	CSS1653

http://www.xiaoyu163.com

http://www.xiaoyu163.com

Mark	No.	Description	Part No.
CN	3003	(A,322,188) 31P CONNECTOR	VKN1262
U	3001	(A,237,221) REMOTE RECEIVER UNIT	GP1UE274XKC1
	3008	(A,29,229) PCB BINDER	VEF1040
	3001	(A,11,165) 3P CABLE HOLDER	51048-0300
	3006	(A,8,205) 4P CABLE HOLDER	51048-0400
	3005	(A,19,158) 4P CABLE HOLDER	51048-0400
	3004	(A,13,217) 3P CABLE HOLDER	51048-0300

RESISTORS

R	3001	(B,160,195)	RS1/10SR101J
R	3002	(B,158,195)	RS1/10SR101J
R	3005	(B,277,221)	RS1/10SR221J
R	3006	(B,275,220)	RS1/10SR221J
R	3007	(B,158,200)	RS1/10SR104J
R	3008	(B,151,192)	RS1/10SR104J
R	3009	(B,146,192)	RS1/10SR104J
R	3011	(A,284,161)	RD1/4PU221J
R	3012	(B,292,178)	RS1/10SR0R0J
R	3014	(B,297,175)	RS1/10SR474J
R	3015	(B,155,194)	RS1/10SR0R0J
R	3016	(B,153,194)	RS1/10SR0R0J
R	3017	(B,296,171)	RS1/10SR473J
R	3018	(B,284,179)	RS1/10SR221J
R	3019	(B,295,183)	RS1/10SR221J
R	3050	(A,80,221)	RD1/4PU104J
R	3051	(A,83,221)	RD1/4PU104J
R	3052	(A,86,221)	RD1/4PU104J
R	3053	(A,89,221)	RD1/4PU104J
R	3054	(B,89,234)	RS1/10SR104J
R	3055	(B,91,234)	RS1/10SR104J
R	3056	(B,93,234)	RS1/10SR104J
R	3057	(B,95,234)	RS1/10SR104J
R	3058	(B,97,234)	RS1/10SR104J
R	3059	(B,99,234)	RS1/10SR104J
R	3060	(B,101,234)	RS1/10SR104J
R	3061	(B,103,234)	RS1/10SR104J
R	3062	(B,105,234)	RS1/10SR104J
R	3063	(B,251,224)	RS1/10SR470J
R	3064	(B,107,234)	RS1/10SR104J
R	3065	(B,242,229)	RS1/10SR104J
R	3066	(B,245,228)	RS1/10SR104J
R	3067	(B,231,228)	RS1/10SR103J
R	3068	(B,233,228)	RS1/10SR472J
R	3069	(B,242,225)	RS1/10SR102J
R	3070	(B,109,234)	RS1/10SR104J
R	3071	(B,30,157)	RS1/10SR0R0J
R	3072	(B,111,234)	RS1/10SR104J
R	3073	(B,236,195)	RS1/10SR392J
R	3074	(B,166,161)	RS1/10SR621J
R	3075	(B,160,161)	RS1/10SR911J
R	3076	(B,124,161)	RS1/10SR132J
R	3077	(B,118,161)	RS1/10SR222J
R	3078	(B,103,160)	RS1/10SR392J
R	3079	(B,82,160)	RS1/10SR123J
R	3080	(B,234,195)	RS1/10SR392J
R	3081	(B,20,186)	RS1/10SR621J
R	3082	(B,229,200)	RS1/10SR392J
R	3083	(B,232,200)	RS1/10SR621J
R	3084	(B,221,197)	RS1/10SR911J
R	3085	(B,216,186)	RS1/10SR132J
R	3086	(B,213,172)	RS1/10SR222J
R	3087	(B,47,184)	RS1/10SR392J
R	3088	(B,44,184)	RS1/10SR123J
R	3089	(B,113,235)	RS1/10SR104J
R	3090	(B,115,235)	RS1/10SR104J
R	3091	(B,117,235)	RS1/10SR104J
R	3092	(B,119,235)	RS1/10SR104J
R	3093	(A,120,222)	RD1/4PU104J
R	3094	(A,120,219)	RD1/4PU104J
R	3095	(A,256,206)	RD1/4PU104J
R	3096	(B,256,203)	RS1/10SR101J
R	3097	(B,304,164)	RS1/10SR333J
R	3099	(B,298,182)	RS1/10SR154J
R	3100	(B,262,209)	RS1/10SR105J
R	3101	(B,258,202)	RS1/10SR0R0J
R	3102	(A,189,186)	RD1/4PU681J
R	3103	(B,127,234)	RS1/10SR104J
R	3105	(B,129,234)	RS1/10SR104J
R	3106	(B,131,234)	RS1/10SR104J
R	3107	(B,133,234)	RS1/10SR104J
R	3108	(B,135,234)	RS1/10SR104J
R	3109	(B,137,234)	RS1/10SR104J
R	3114	(B,288,219)	RS1/10SR473J
R	3116	(B,139,234)	RS1/10SR104J
R	3117	(B,290,219)	RS1/10SR473J
R	3118	(B,141,234)	RS1/10SR104J
R	3119	(B,293,219)	RS1/10SR473J
R	3121	(B,143,234)	RS1/10SR104J
R	3122	(B,305,214)	RS1/10SR473J
R	3123	(A,69,186)	RD1/4PU681J
R	3133	(A,86,186)	RD1/4PU681J
R	3135	(B,145,234)	RS1/10SR104J
R	3136	(B,147,234)	RS1/10SR104J
R	3138	(B,149,234)	RS1/10SR104J
R	3139	(A,136,178)	RD1/4PU151J
R	3140	(B,276,180)	RS1/10SR221J
R	3141	(B,151,234)	RS1/10SR104J
R	3142	(B,307,181)	RS1/10SR101J
R	3143	(B,305,186)	RS1/10SR104J
R	3144	(B,307,186)	RS1/10SR104J
R	3145	(B,306,194)	RS1/10SR104J
R	3146	(B,317,173)	RS1/10SR101J
R	3147	(B,318,168)	RS1/10SR101J
R	3148	(B,153,234)	RS1/10SR104J
R	3149	(B,299,175)	RS1/10SR473J
R	3150	(B,157,234)	RS1/10SR473J
R	3151	(B,305,181)	RS1/10SR221J
R	3152	(B,308,194)	RS1/10SR221J
R	3153	(B,303,181)	RS1/10SR103J
R	3154	(B,308,198)	RS1/10SR473J
R	3155	(B,159,234)	RS1/10SR473J
R	3156	(B,161,234)	RS1/10SR473J
R	3157	(B,229,232)	RS1/10SR104J
R	3158	(B,163,234)	RS1/10SR473J
R	3159	(B,165,234)	RS1/10SR473J
R	3160	(B,227,225)	RS1/10SR622J
R	3161	(B,226,212)	RS1/10SR101J
R	3162	(B,230,212)	RS1/10SR334J
R	3163	(B,167,234)	RS1/10SR473J

http://www.xiaoyu163.com

http://www.xiaoyu163.com

Mark	No.	Description	Part No.
	R 3164	(B,169,234)	RS1/10SR473J
	R 3165	(B,177,235)	RS1/10SR473J
	R 3166	(B,179,235)	RS1/10SR473J
A	R 3171	(B,228,212)	RS1/10SR0R0J
	R 3172	(B,181,235)	RS1/10SR473J
	R 3173	(B,252,190)	RS1/10SR473J
	R 3174	(B,250,190)	RS1/10SR473J
	R 3175	(B,241,209)	RS1/10SR473J
	R 3176	(B,286,175)	RS1/10SR474J
	R 3177	(B,287,179)	RS1/10SR473J
	R 3178	(B,279,221)	RS1/10SR221J
	R 3179	(B,287,171)	RS1/10SR274J
	R 3180	(B,248,190)	RS1/10SR473J
	R 3181	(B,183,235)	RS1/10SR473J
B	R 3183	(B,249,210)	RS1/10SR473J
	R 3184	(B,244,202)	RS1/10SR473J
	R 3186	(B,312,205)	RS1/10SR101J
	R 3187	(B,279,180)	RS1/10SR474J
	R 3188	(B,281,180)	RS1/10SR474J
	R 3189	(B,277,185)	RS1/10SR473J
	R 3190	(B,272,184)	RS1/10SR473J
	R 3191	(B,274,185)	RS1/10SR473J
	R 3192	(B,243,209)	RS1/10SR473J
	R 3194	(B,270,186)	RS1/10SR473J
	R 3195	(B,281,222)	RS1/10SR221J
C	R 3196	(B,285,171)	RS1/10SR474J
	R 3197	(B,254,190)	RS1/10SR473J
	R 3198	(A,256,214)	RD1/4PU473J
	R 3199	(B,185,235)	RS1/10SR473J
	R 3200	(B,187,235)	RS1/10SR473J
	R 3201	(B,187,226)	RS1/10SR473J
	R 3202	(B,189,226)	RS1/10SR473J
	R 3203	(B,196,224)	RS1/10SR473J
	R 3205	(B,23,163)	RS1/10SR0R0J
	R 3215	(B,155,234)	RS1/10SR104J
D	R 3216	(B,25,163)	RS1/10SR0R0J
	R 3217	(B,249,198)	RS1/10SR221J
	R 3218	(B,256,199)	RS1/10SR473J
	R 3219	(B,304,202)	RS1/10SR221J
	R 3220	(B,316,200)	RS1/10SR473J
	R 3221	(B,301,204)	RS1/10SR221J
	R 3222	(B,324,203)	RS1/10SR473J
	R 3227	(B,197,215)	RS1/10SR473J
	R 3228	(B,163,197)	RS1/10SR104J
	R 3229	(B,21,163)	RS1/10SR0R0J
E	R 3230	(B,290,183)	RS1/10SR102J
	R 3231	(B,311,196)	RS1/10SR102J

CAPACITORS

Mark	No.	Description	Part No.
	C 3001	(B,160,208)	CKSRYB102K50
	C 3002	(B,162,208)	CKSRYB104K16
	C 3003	(B,160,200)	CKSRYB104K16
	C 3004	(B,149,192)	CCSRCH471J50
	C 3006	(B,68,228)	CKSRYB102K50
	C 3007	(A,313,233)	CEJQ221M6R3
	C 3008	(B,129,195)	CKSRYB104K16
	C 3009	(B,315,231)	CKSRYB103K50
F	C 3010	(B,233,232)	CKSRYB103K50
	C 3011	(B,155,227)	CKSRYB471K50
	C 3012	(B,158,227)	CKSRYB471K50
	C 3013	(B,161,227)	CKSRYB471K50
	C 3014	(B,163,227)	CKSRYB471K50
	C 3015	(B,166,227)	CKSRYB471K50
	C 3016	(B,168,227)	CKSRYB471K50
	C 3017	(B,170,227)	CKSRYB471K50
	C 3018	(B,172,227)	CKSRYB471K50
	C 3019	(B,175,227)	CKSRYB471K50
	C 3020	(B,177,225)	CKSRYB471K50
	C 3021	(B,180,225)	CKSRYB471K50
	C 3022	(B,182,225)	CKSRYB471K50
	C 3023	(B,185,225)	CKSRYB471K50
	C 3024	(B,187,222)	CKSRYB471K50
	C 3025	(B,190,222)	CKSRYB471K50
	C 3026	(B,192,222)	CKSRYB471K50
	C 3027	(B,233,219)	CKSRYB103K50
	C 3028	(A,226,219)	CEJQ470M6R3
	C 3029	(B,126,210)	CKSRYB105K10
	C 3030	(B,146,227)	CKSRYB102K50
	C 3031	(B,144,226)	CKSRYB104K50
	C 3032	(A,61,213)	CEAT470M50
	C 3034	(A,209,227) ELECT. CAPACITOR	CEAT101M35
	C 3035	(B,199,229)	CKSRYB471K50
	C 3036	(B,187,162)	CKSRYB102K50
	C 3037	(B,303,156)	CKSRYB105K10
	C 3038	(B,250,185)	CKSRYB102K50
	C 3039	(B,229,196)	CKSRYB102K50
	C 3040	(B,265,208)	CCSRCH120J50
	C 3041	(B,265,212)	CCSRCH120J50
	C 3042	(B,297,153)	CKSRYB105K10
	C 3044	(B,268,216)	CKSRYB105K10
	C 3045	(B,261,202)	CKSRYB104K16
	C 3048	(B,303,216)	CKSRYB104K16
	C 3049	(B,268,186)	CKSRYB104K16
	C 3051	(A,183,207)	CEAL101M16
	C 3052	(A,209,217)	CEAT470M50
	C 3053	(B,30,161)	CKSRYB104K16
	C 3054	(B,253,210)	CKSRYB105K16
	C 3056	(B,301,198)	CKSRYB104K16
	C 3057	(B,324,215)	CKSRYB104K16
	C 3058	(B,301,181)	CKSRYB104K16
	C 3059	(B,324,212)	CKSRYB104K16
	C 3061	(B,307,159)	CKSRYB472K50
	C 3062	(B,294,178)	CKSRYB104K16
	C 3063	(B,12,208)	CKSRYB102K50
	C 3064	(A,61,224)	CEAT4R7M50
	C 3065	(B,309,135)	CKSRYB103K50
	C 3066	(B,307,135)	CKSRYB103K50
	C 3067	(B,222,224)	CKSRYB103K50
	C 3068	(B,219,226)	CKSRYB153K50
	C 3069	(B,262,216)	CKSRYB471K50
	C 3070	(B,300,216)	CKSRYB471K50
	C 3073	(B,18,218)	CKSRYB102K50
	C 3075	(B,27,163)	CKSRYB102K50
	C 3076	(B,20,218)	CKSRYB104K16
	C 3080	(B,301,141)	CKSRYB471K50
	C 3081	(B,299,141)	CKSRYB103K50
	C 3082	(B,297,141)	CKSRYB224K16
	C 3091	(B,284,183)	CKSRYB473K16
	C 3092	(B,283,171)	CKSRYB473K16

http://www.xiaoyu163.com

http://www.xiaoyu163.com

Mark	No.	Description	Part No.
	C 3094	(B,195,193)	CKSRYB104K16
	C 3096	(A,194,214)	CEAL470M16
	C 3097	(A,209,209)	CEAT470M50

S REGULATOR ASSY

SEMICONDUCTORS

Mark	No.	Description	Part No.
⚠	IC 4001		NJM78M56FA
⚠	IC 4011		KIA7812API
⚠	IC 4012		KIA7912PI
	D 4011,4012		RB501V-40

MISCELLANEOUS

Mark	No.	Description	Part No.
	JH 4011	PCB BINDER	VEF1040
	JP 4001	CONNECTOR ASS'Y	PF06PG-R05
	JP 4002	10P HOUSING ASSY	XDX3088
	JP 4003	PF04EN CABLE ASSY	XDX3090
	JP 4004	PF04PG CABLE ASSY	XDX3091

RESISTORS

Mark	No.	Description	Part No.
	R 4003		RS3LMF331J
	Other Resistors		RS1/10SR###J

CAPACITORS

Mark	No.	Description	Part No.
	C 4001		CKSRYB103K50
	C 4002		CEHAT101M16
	C 4011,4012		CEHAT220M50
	C 4013,4014		CKSRYB104K25
	C 4017		CEHATR33M50
	C 4018		CEHAT2R2M50

T V6 PRIMARY ASSY

MISCELLANEOUS

Mark	No.	Description	Part No.
⚠	IC 51	(A,69,14) REGULATOR IC	NJM78M56FA
	Q 51	(B,92,14) TRANSISTOR	LTC143EUB
	Q 52	(B,100,27) TRANSISTOR	LSC4081UB
⚠	D 51	(B,124,20) BRIDGE DIODE	DF06SA
	D 52	(B,95,31) DIODE	UDZS20(B)
	D 55	(A,130,22) DIODE	1SR139-400
	D 56	(A,95,21) DIODE	1SS133
	D 57	(A,90,25) DIODE	1SS133
	D 58	(A,138,14) DIODE	MTZJ5R1(B)
⚠	L 51	(A,77,73) LINE FILTER	XTF3004
	H 51	(A,55,34) FUSE CLIP	AKR1004
	H 52	(A,76,34) FUSE CLIP	AKR1004
	KN 51	(A,142,25) WRAPPING TERMINAL	VNF1084
	KN 52	(A,47,117) SCREW PLATE	VNE1948
⚠	RY 51	(A,95,57) JOE LOWPOWER RELAY	ASR7013
⚠	T 51	(A,112,56) STANDBY TRANSFORMER	ATT7108
⚠	CN 51	(A,60,47) AC CODE SOCKET	RKP1751
	CN 55	(A,135,9) 4PJUMPER CONNECTOR	52151-0410

RESISTORS

Mark	No.	Description	Part No.
	R 52	(A,99,11)	RD1/2PM270J
	R 53	(A,134,13)	RD1/4PU332J
	R 54	(A,143,17)	RD1/4PU103J
	R 55	(B,100,16)	RS1/10SR102J
	R 56	(B,100,31)	RS1/10SR223J
	R 57	(B,97,27)	RS1/10SR222J

CAPACITORS

Mark	No.	Description	Part No.
⚠	C 51	(A,85,64) FILM CAPACITOR	ACE7013
⚠	C 52	(A,89,57) SAFETY CAPACITOR	XCG3010
	C 53	(A,116,21) ELECT. CAPACITOR	CEAT222M25
	C 54	(A,124,11)	CEAT470M25
	C 55	(B,132,25)	CKSRYB103K25
	C 56	(B,135,25)	CKSRYB103K25
	C 57	(B,140,30)	CKSRYB103K25
	C 62	(B,130,7)	CKSRYB104K25

U V6 TRANS 1 ASSY

V6 TRANS 1 ASSY has no service part.

V TRANS 2 ASSY

MISCELLANEOUS

Mark	No.	Description	Part No.
	JH 4701	2P CABLE HOLDER	51048-0200

W TRANS 3 ASSY

SEMICONDUCTORS

Mark	No.	Description	Part No.
⚠	IC 4911		KIA7805API
	Q 4921		LSA1576UB
	Q 4922,4924,4927,4929		LTC124EUB
	Q 4923,4925		LSC4081UB
	Q 4926		2SD2704K
	Q 4928,4930		LTA124EUB
	Q 4931		2SD1858X
	Q 4941		RT3P22M
	Q 4942		RT3N22M
⚠	D 4901		S1WB(A)60SD
⚠	D 4911		D5SBA20(B)
	D 4912		MTZJ6R2(B)
	D 4921		1SR154-400
	D 4922		UDZS5R1(B)
	D 4923,4924		UDZS13(B)
	D 4941		1SS355
	D 4942		UDZS6R2(B)

MISCELLANEOUS

Mark	No.	Description	Part No.
	CN 4901	10P TOP POST	B10B-EH
	CN 4902	3P TOP POST	B3B-EH
	CN 4903	6P JUMPER CONNECTOR	52147-0610

RESISTORS

Mark	No.	Description	Part No.
	All Resistors		RS1/10SR###J

MISCELLANEOUS

Mark	No.	Description	Part No.
	JH 4904,4905	PCB BINDER	VEF1040
⚠	P 4901	PROTECTOR(800MA)	AEK7063
⚠	P 4904	PROTECTOR(7A)	AEK7047

CAPACITORS

Mark	No.	Description	Part No.
	C 4901,4902		CEAT222M25
	C 4914,4948,4949		CKSRYB104K50
	C 4915		CKSRYB103K25
	C 4916		CEAT472M16
	C 4917		CEAT101M10
	C 4921		CEAT471M35
	C 4923,4947,4950		CKSRYB103K50

http://www.xiaoyu163.com

http://www.xiaoyu163.com

Mark	No.	Description	Part No.
	C 4941		CKSRYB105K16
	C 4951		CCSRCH101J50

FM/AM TUNER UNIT

FM/AM TUNER UNIT has no service part.

http://www.xiaoyu163.com