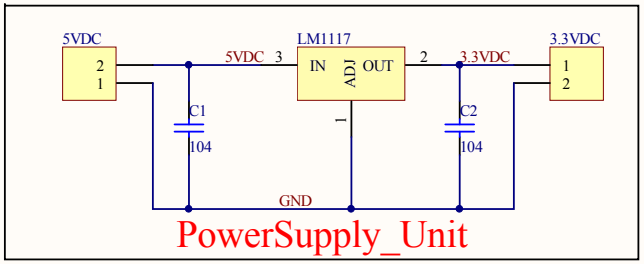

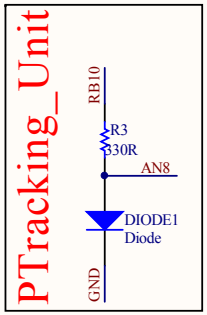

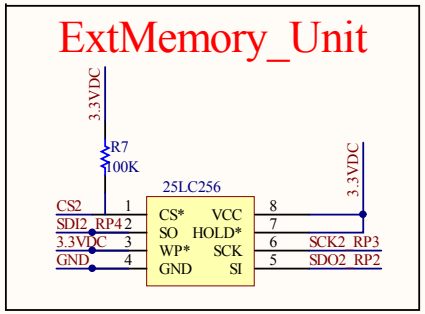

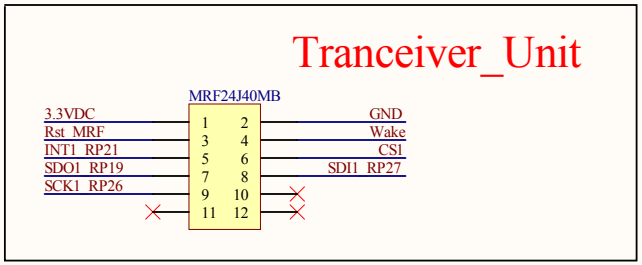

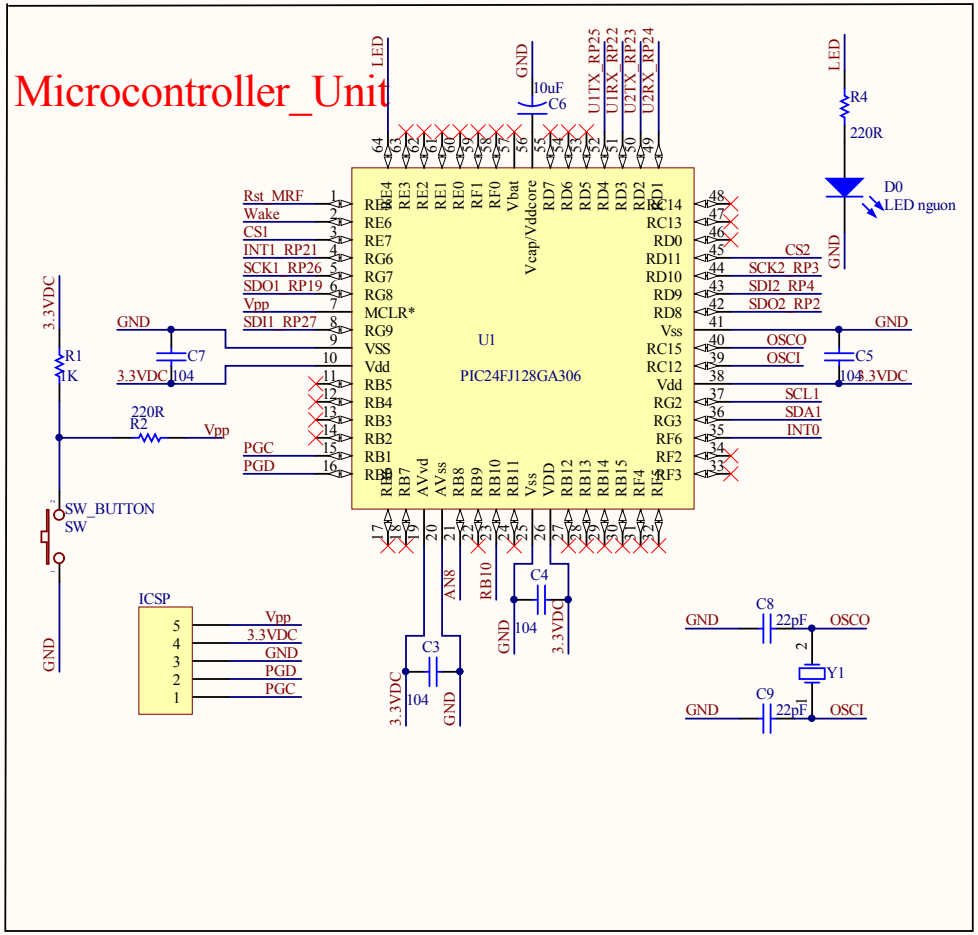

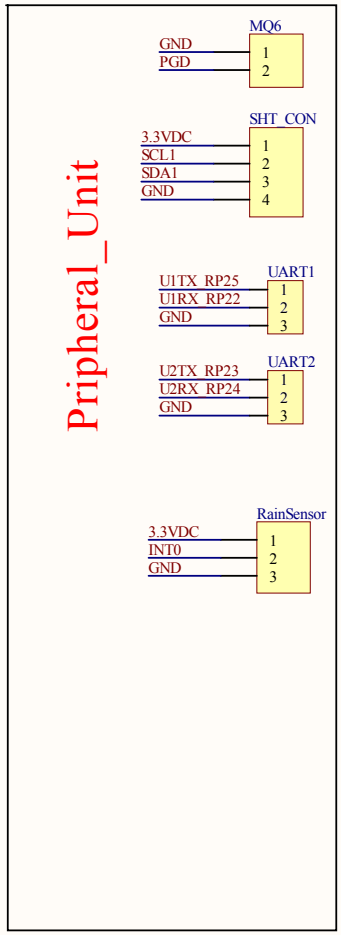

Title		
Size A4	Number	Revision
Date: 11/7/2012	Sheet of	
File: D:\SUBDIRECTORY\..\Canhbaochayrung.SchDoc	Drawn By:	