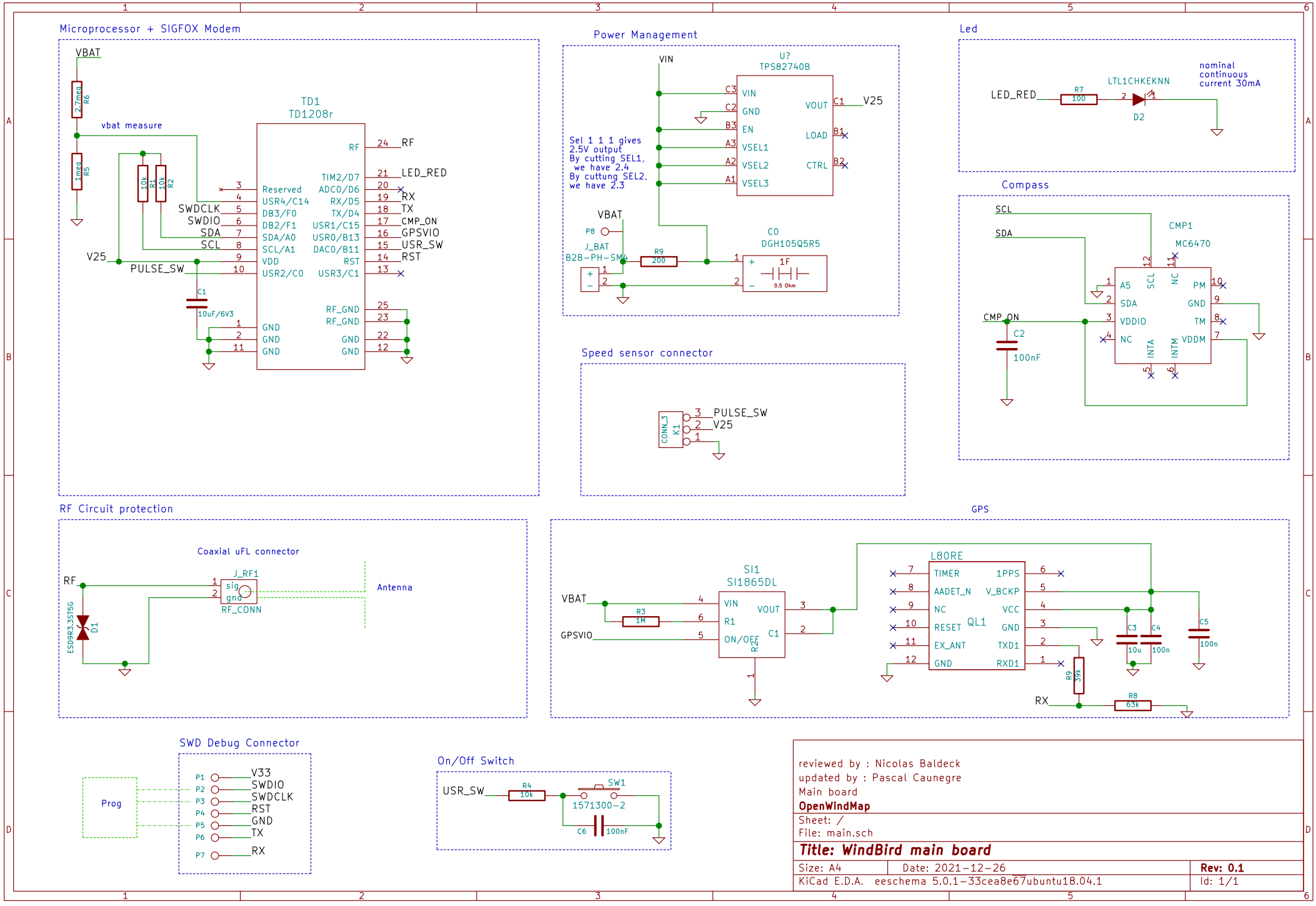

reviewed by : Nicolas Baldeck
updated by : Pascal Caunegre
Main board
OpenWindMap

Sheet: /
File: main.sch

Title: WindBird main board

Size: A4	Date: 2021-12-26	**Rev: 0.1**
KiCad E.D.A. eeschema 5.0.1-33cea8e67ubuntu18.04.1		Id: 1/1