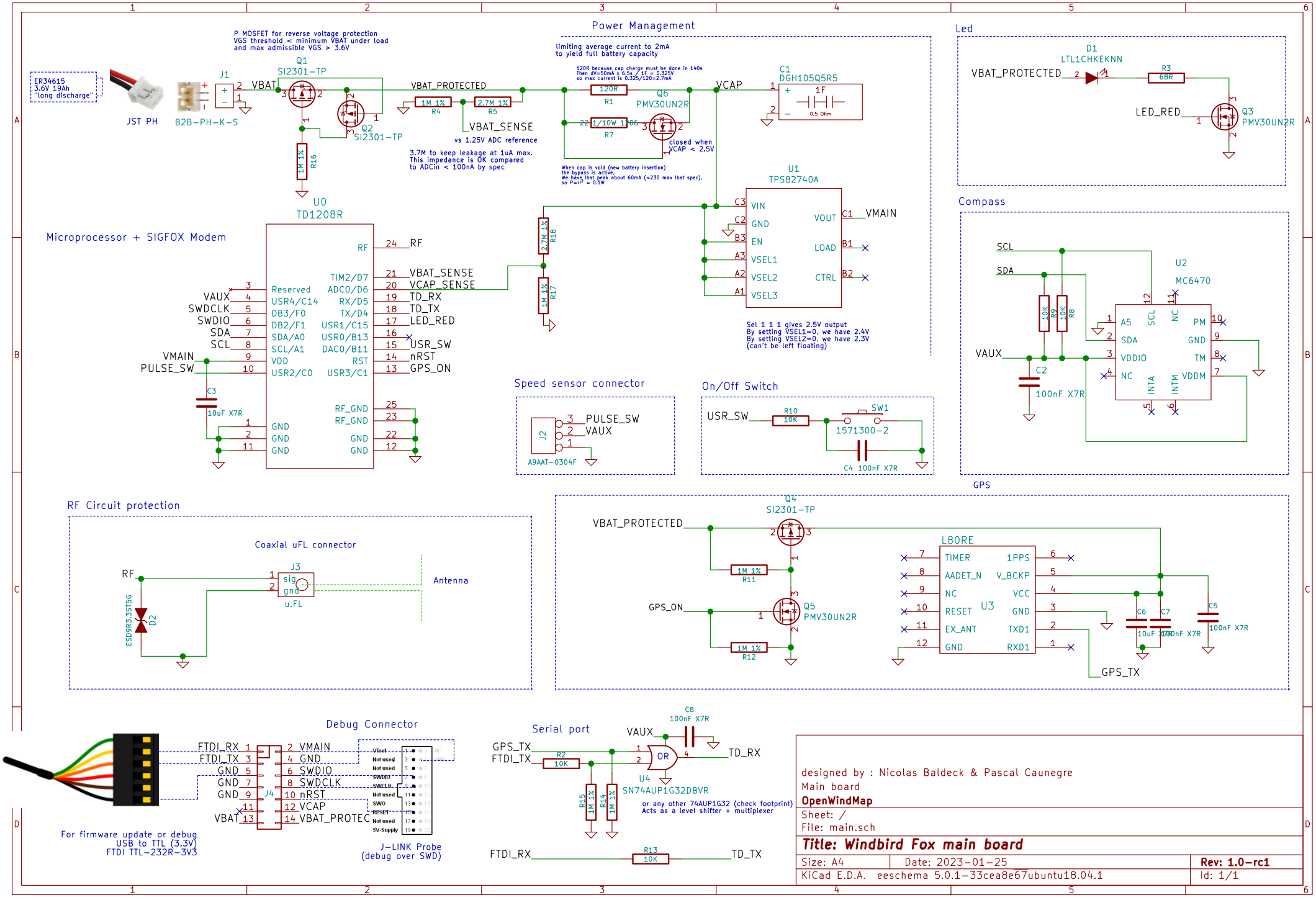

designed by : Nicolas Baldeck & Pascal Caunegre
Main board
OpenWindMap
Sheet: /
File: main.sch

Title: Windbird Fox main board

Size: A4	Date: 2023-01-25	**Rev: 1.0-rc1**
KiCad E.D.A. eeschema 5.0.1-33cea8e67ubuntu18.04.1		Id: 1/1

GPS will not work when FTDI TX wire is plugged
FTDI cable should only be used for firmware upgrades (GPS off)
Pull-down resistor on GPS_TX might not be required.