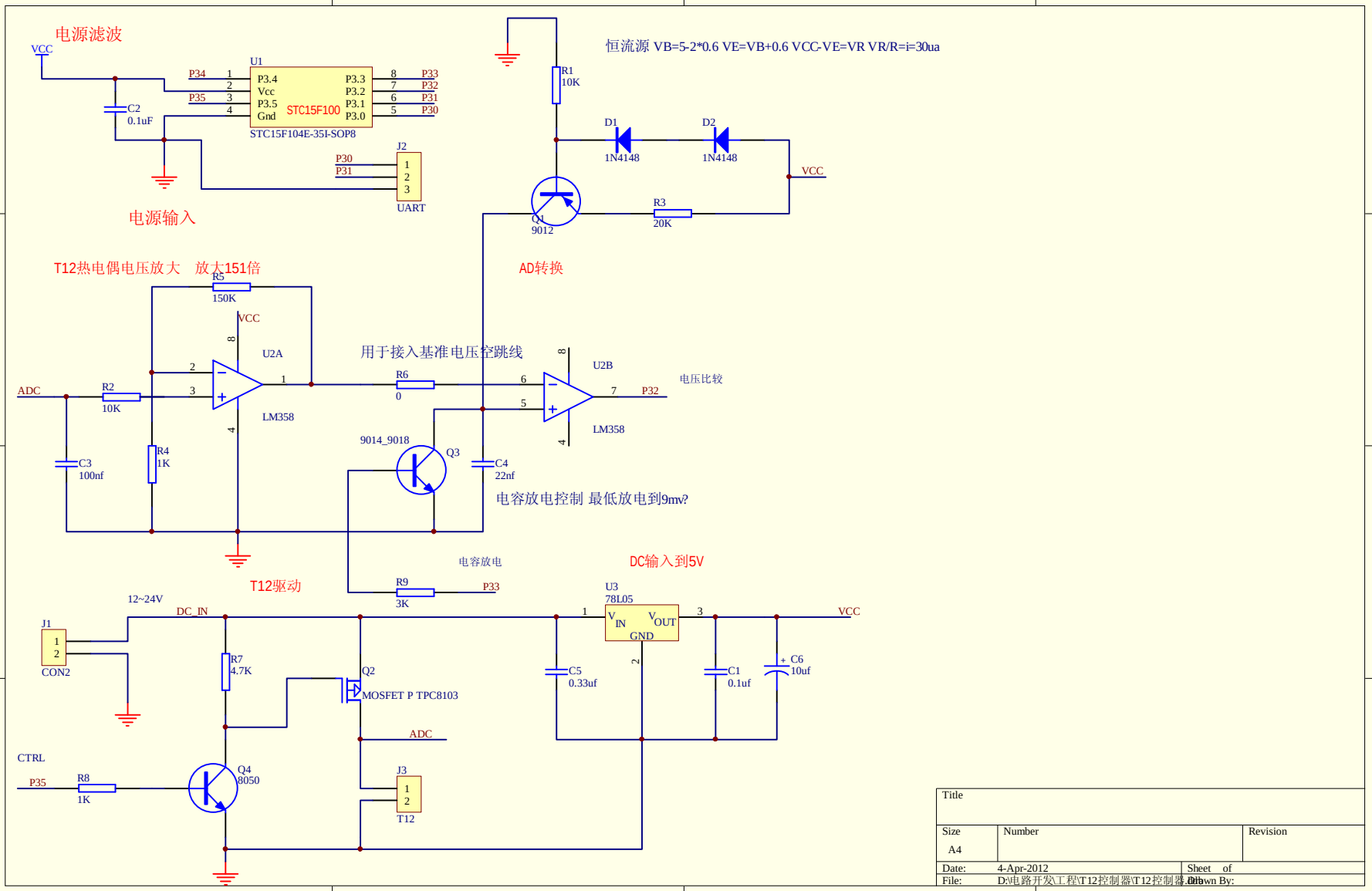

Title		
Size A4	Number	Revision
Date: 4-Apr-2012	Sheet of	
File: D:\电路开发\工程\T12控制器\T12控制器.Drb	Drawn By:	