The actuator output is given as a digital (low power) signal. This is so the acutator can optionally use a separate power supply than the sensor board and be decoupled from it since it may have significantly different power requirements. We plan to use a transistor on a separate circuit board to power the actuator separately, with the transistor base triggered by the ACT_OUT signal.

Programming Port. On CP2104 Friend, pinout is:
RTS | RX | TX | V+ (5V/3V3) | CTS | GND

RTS and CTS remain unused.

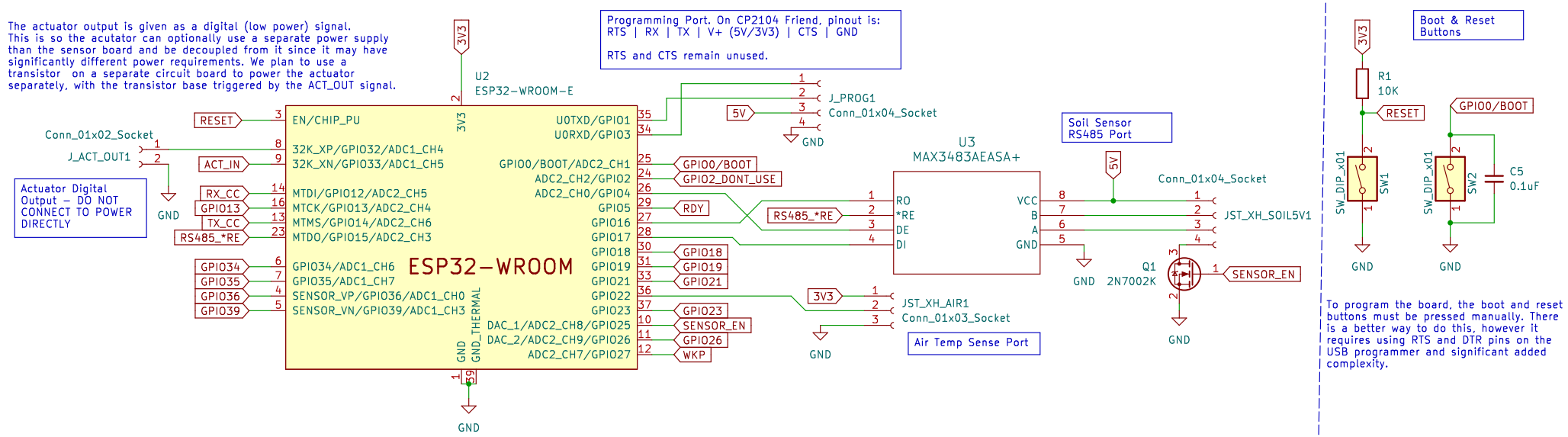

Boot & Reset Buttons

To program the board, the boot and reset buttons must be pressed manually. There is a better way to do this, however it requires using RTS and DTR pins on the USB programmer and significant added complexity.

3V3 Power LDO – HT7833

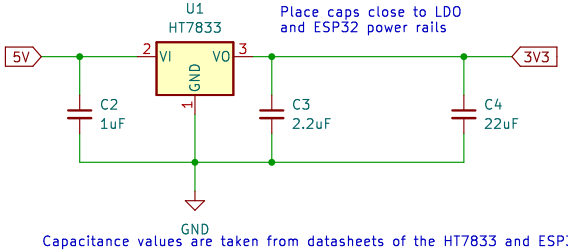

Place caps close to LDO and ESP32 power rails

Capacitance values are taken from datasheets of the HT7833 and ESP32.

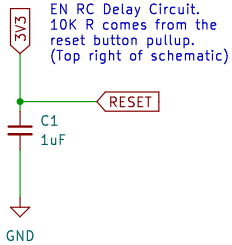

EN RC Delay Circuit.
10K R comes from the reset button pullup.
(Top right of schematic)

CottonCandy Node Connections

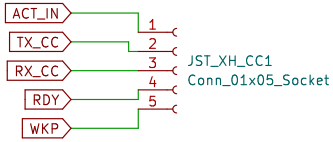

We assume that actuation input will be provided as a pulse, akin to the WKP signal, on a different port which we name "ACT_IN". The actual downstream data is expected on the "RX_CC" port.

Spare GPIO Bank

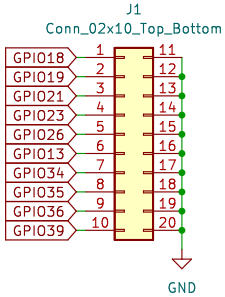

Spare GPIOs are paired with GND for simplified connection to external devices. This is presented as a 2x10 standard 0.100" female(?) connector on the board.

Optional Power LED

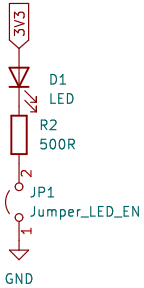

Sheet: /	
File: esp32_sensor_node.kicad_sch	
Title: ESP32 WROOM 32 – CottonCandy Sensor and Actuator Platform	
Size: A4 Date: Dec 2 2023	**Rev:** 1.0
KiCad E.D.A. kicad 7.0.9	Id: 1/1