User manual Super expansionboard v1.2.3a

v1.0

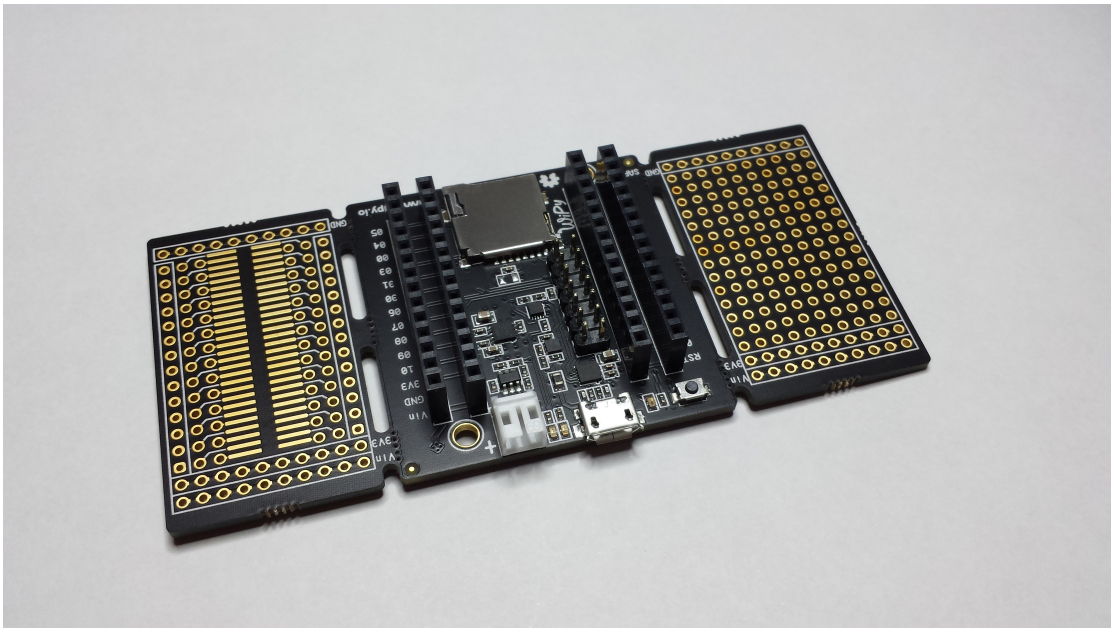

1. Features

- All WiPy pins available on breakout pins
- Micro USB Connector for power and for serial communication.
- User Button
- User LED
- Reverse battery protection
- LiPo battery charger
- Micro SD card connector with push-pull function
- 7 jumpers for enabling or disabling features
- 2 prototyping areas

2. Block diagram

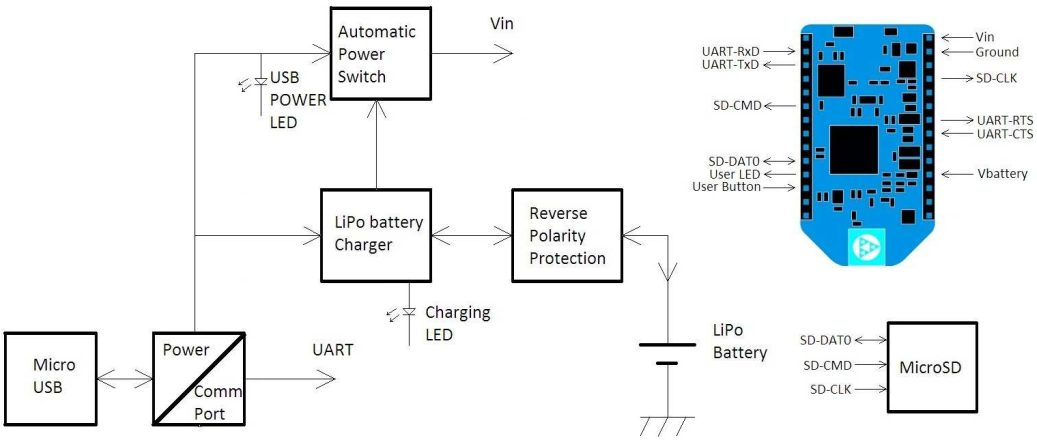

3. Overview

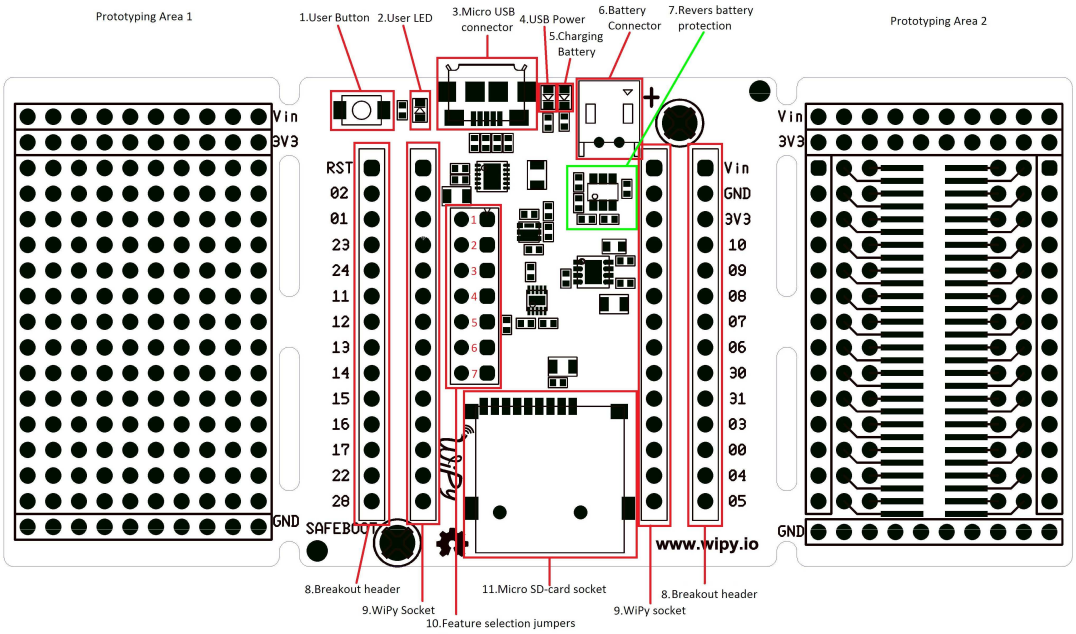

1. User switch
2. User LED
3. Micro USB connector for power and serial communication
4. USB Powered LED
5. LiPo battery charging
6. LiPo battery connector (JST)
7. Reverse battery protection
8. WiPy breakout header
9. WiPy socket
10. Feature selection jumpers
11. Micro SD-card socket

Prototyping area 1

- 14x 10 holes isolated (100mill/2.54mm pitch)
- 10x hole connected to Vin
- 10x hole connected to 3V3
- 10x hole connected to ground

Prototyping area 2,

- breakout SOIC to holes (56way)
- 14 x 2 holes isolated
- 10x hole connected to Vin
- 10x hole connected to 3V3
- 10x hole connected to ground

4. Feature selection jumpers

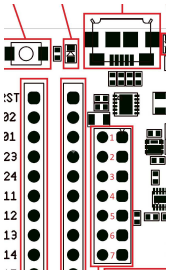

Jumper number	Pin Name	Pin function jumper Closed	Pin function jumper Open
1	GPIO2	RxD	GPIO2
2	GPIO6	CTS	GPIO6
3	GPIO1	TxD	GPIO1
4	GPIO7	RTS	GPIO7
5	GPIO3	Vbattery	GPIO3
6	GPIO16	User LED Enabled	User LED Disabled
7	-	Battery charge current 450mA	Battery charge current 100mA

5. cautions and warnings

The following conditions WILL CAUSE THE WiPy TO BE PERMANTLY DAMAGED.

- When a voltage above 3.6V is applied to any pin of the WiPy (besides the Vin pin)
- When a voltages above 1.8V is applied to an analogue input.

6. Remarks and suggestions

If you have any remarks or suggestions please let us know at welisten@wipy.io