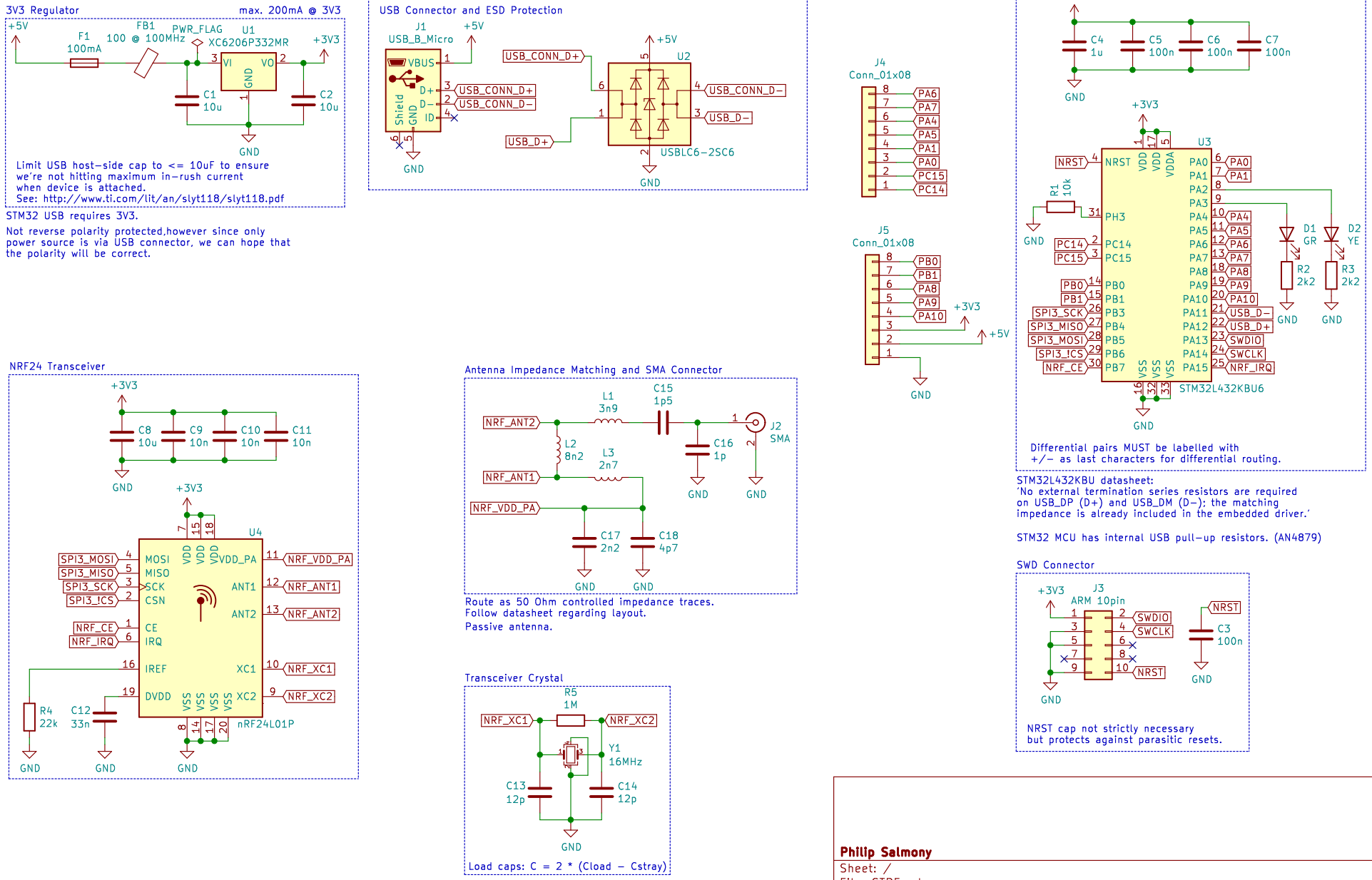

Philip Salmony

Sheet: /

File: STRF.sch

Title: STRF

Size: A4	Date: 2020-05-09	**Rev: 1.0**
KiCad E.D.A. kicad (5.1.9)-1		Id: 1/1