(1)

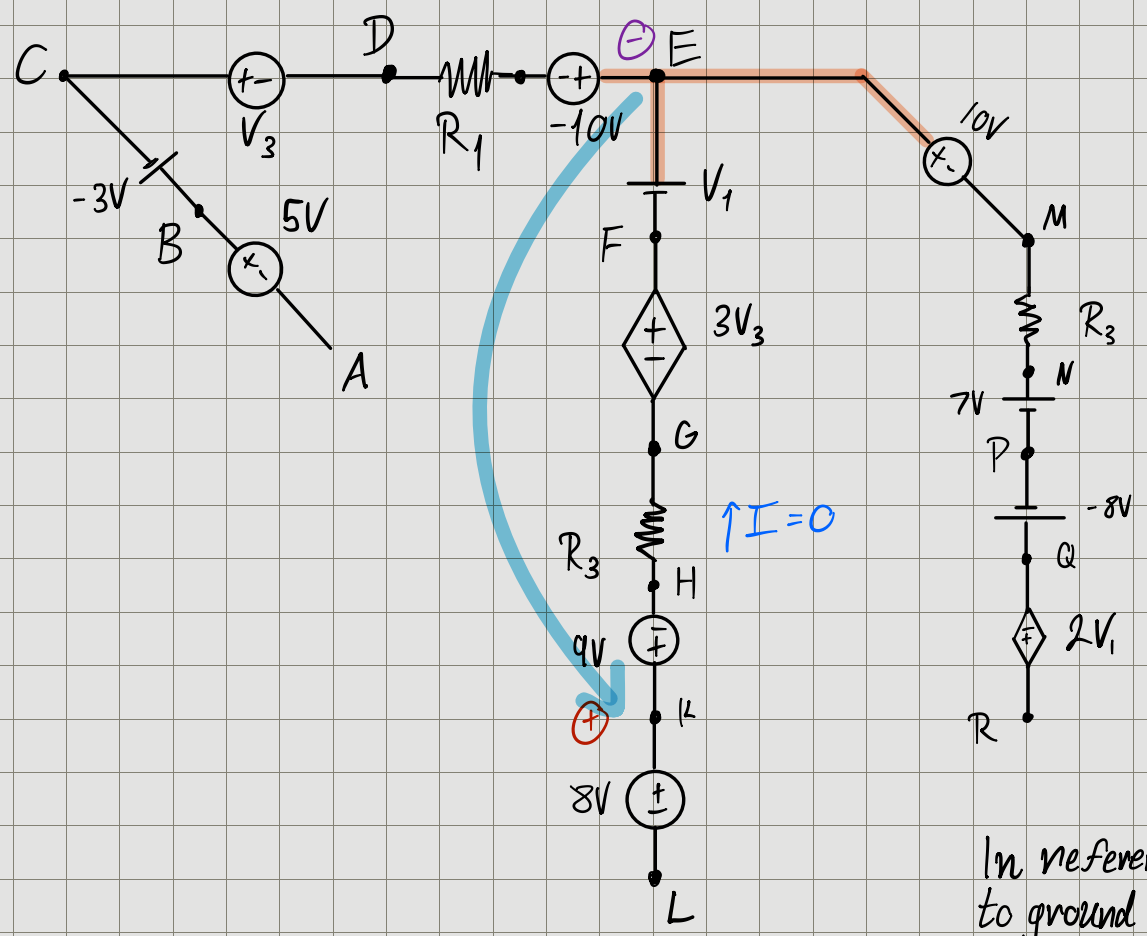


if $V_1 = 6V$ & $V_3 = 5V_1$

$V_{KE} = 9 - 15 - 6 = -12V$

positive terminal

negative terminal

$V_E$ is ground, so

$V_M = V_{M(E)} = -10V$ (Nodal Voltage)

$V_A = -5 + (-3) + 5 - (-10)$

$V_A = 7V$

In reference to ground

$V_{RE} = V_Q + 12V = -13V$

$V_{AR} = V_A - V_{RE} = 20V$

$V_L = V_{KE} - 8 = -20V$

$V_Q = -8 - 7 - 10 = -25V$

$V_B = V_A + 5 = 12V$

(2)

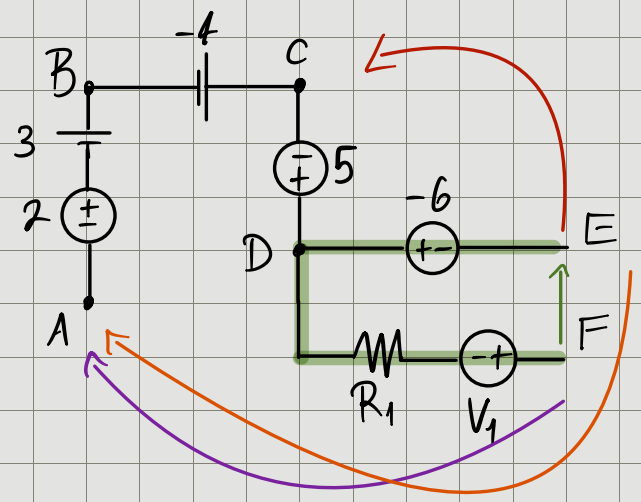


# Class Work

① find $V_c$ if $V_E = -5V$?

$V_{CE} = V_c - V_E$

$\Rightarrow V_c = V_{CE} + V_E = -5 - 6 - 5 = -16V$

$\boxed{V_c = -16V}$

② What is $V_1$ if $V_E = -5V$ and $V_F = -5$?

$V_{EF} = V_E - V_F = 0$

$V_{EF} = 6 - V_1 \Rightarrow \boxed{V_1 = 6V}$

Exam Questions:

① if $V_A = 10V$, what is $V_E$?

② if $V_A = 10V$ and $V_f = 1V$, what is $V_1$?

$V_{AF} = V_A - V_F = 10 - 1 = 9V$

$V_{AF} = -2 - 3 + 4 - 5 - V_1$

$= -6 - V_1$

$\Rightarrow V_1 = -15V$

$V_{AE} = V_A - V_E$

$V_{AE} = -2 - 3 + 4 - 5 - 6 = -12V$

$\Rightarrow V_E = 22V$

Rule of pinky toe,

$V_{AB}$

go in this direction and sum voltages backward from A

(3)

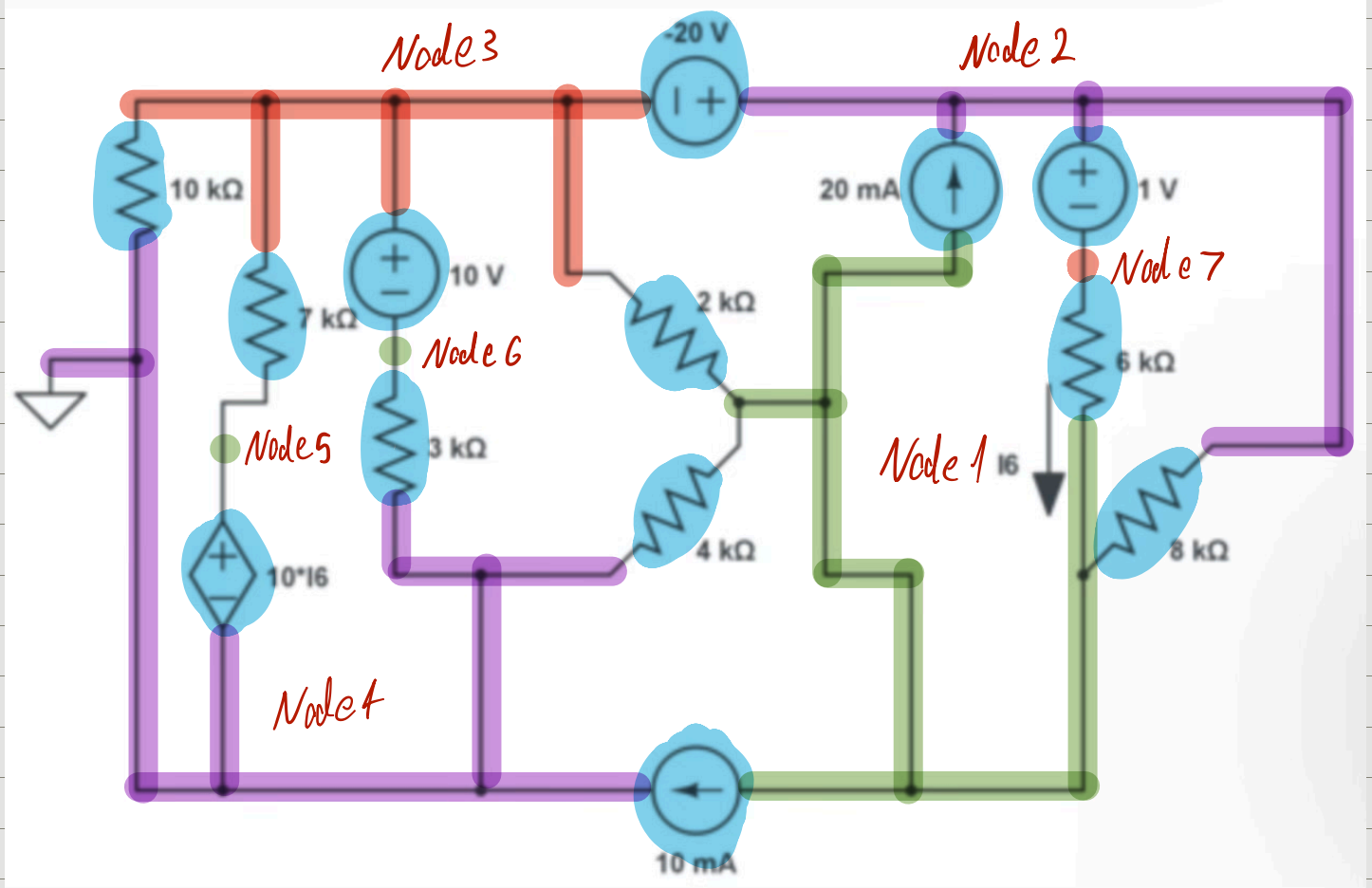


13 Branches

7 Nodes