Superposition

Steps

1. Simplify
2. Keep Dependents
3. Only 1 independent
4. Add Results

How to turn off

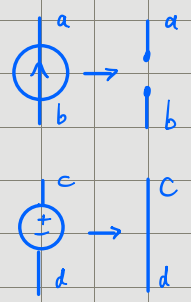

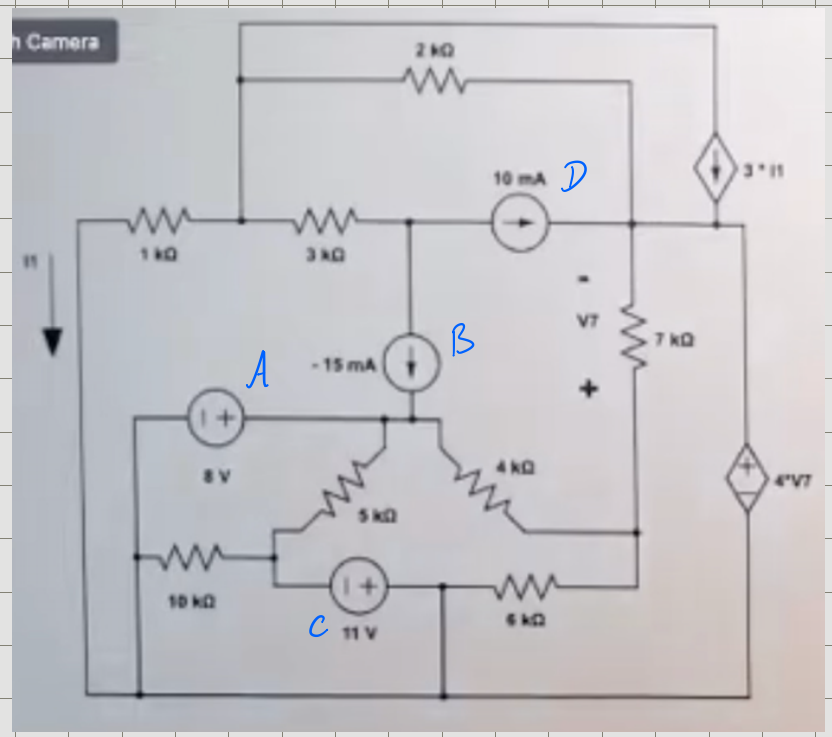

Find V_7 using Superposition

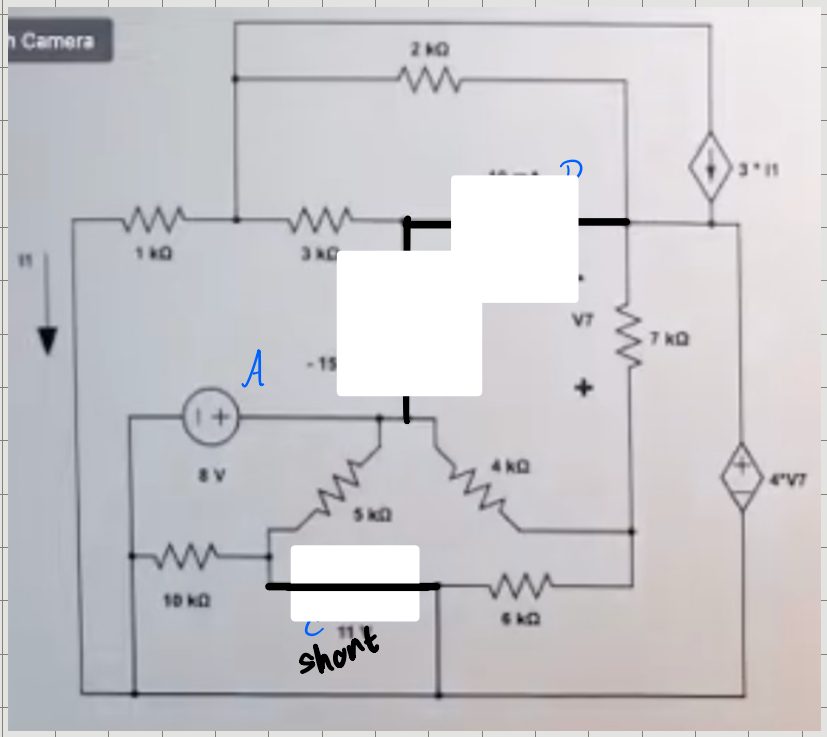
Camera
2 kΩ
3 * I1
1 kΩ
3 kΩ
I1
V7
7 kΩ
A
8 V
4 kΩ
4*V7
5 kΩ
10 kΩ
6 kΩ
short

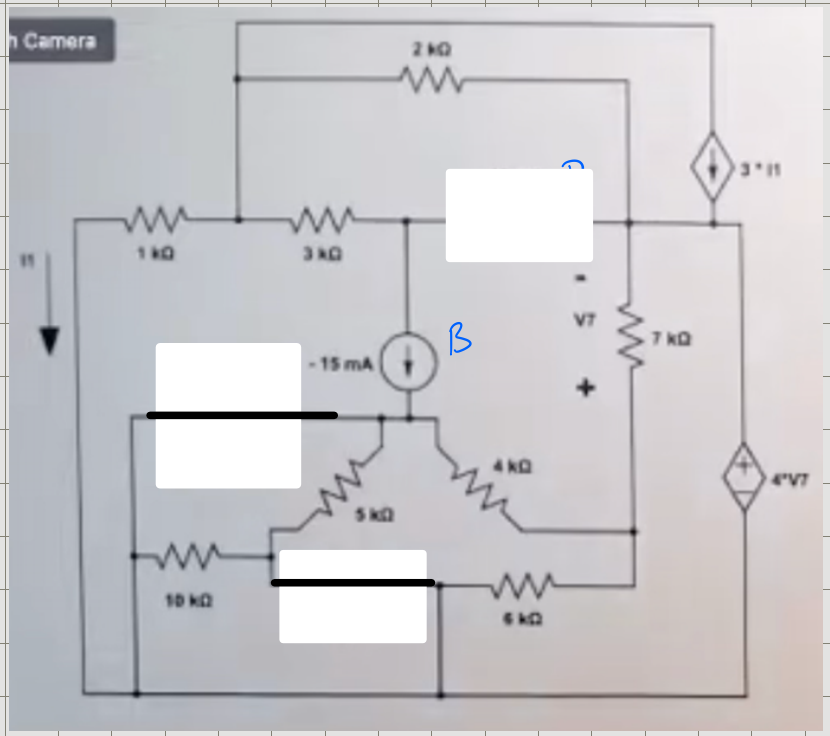
n Camera
2 kΩ
3 * I1
1 kΩ
3 kΩ
I1
B
V7
7 kΩ
- 15 mA
4 kΩ
4*V7
5 kΩ
10 kΩ
6 kΩ

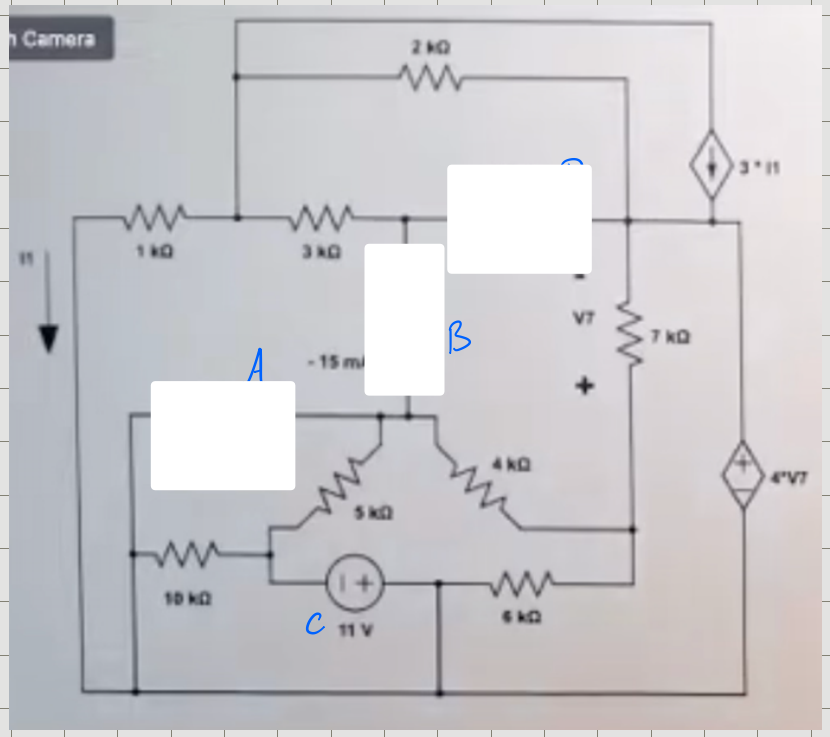
Camera
2 kΩ
3 * i1
1 kΩ
3 kΩ
i1
V7
7 kΩ
- 15 mA
A
B
4 kΩ
4*V7
5 kΩ
10 kΩ
C
11 V
6 kΩ

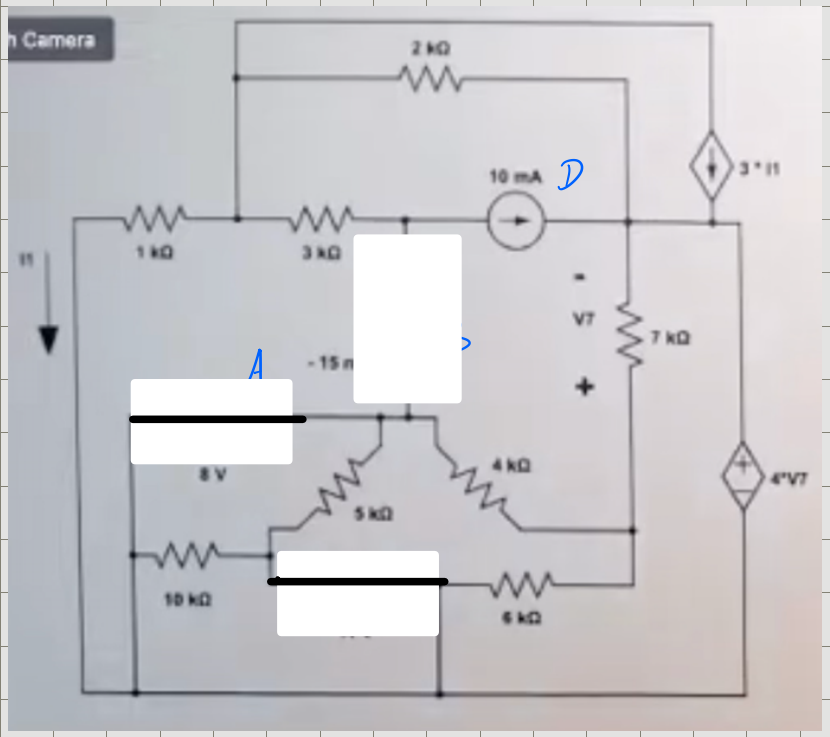

$$V_7 = V_{7a} + V_{7b} + V_{7c} + V_{7d}$$

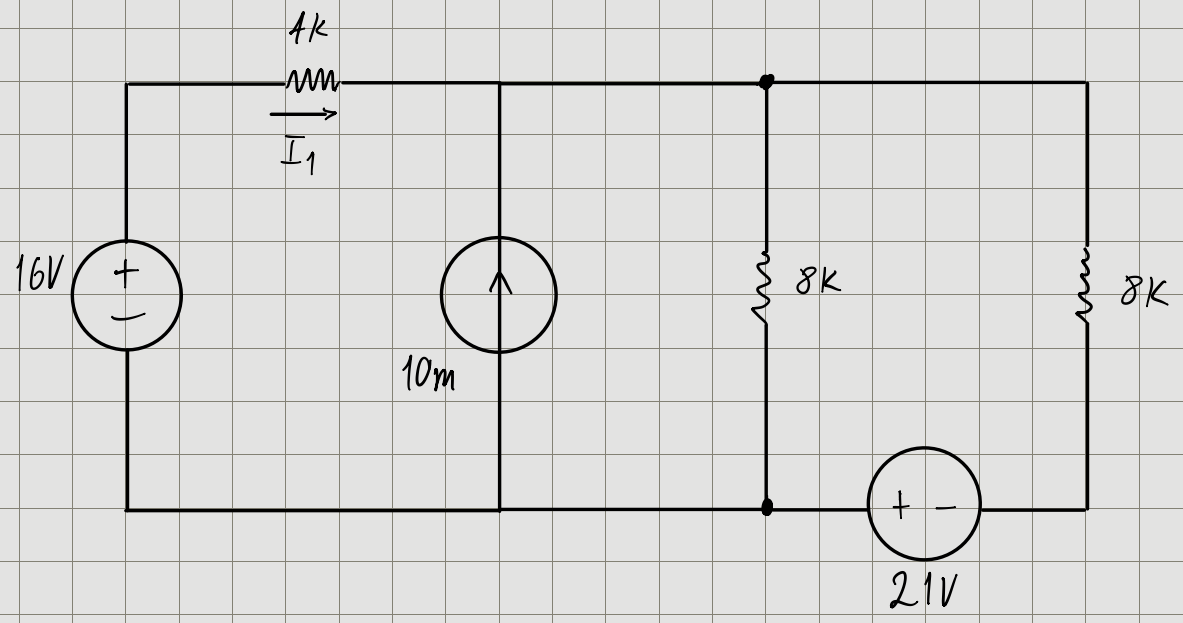

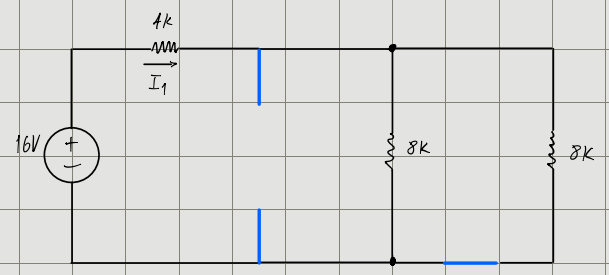

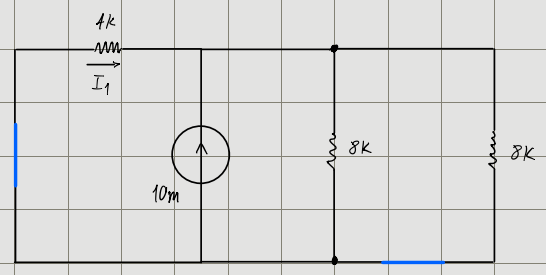

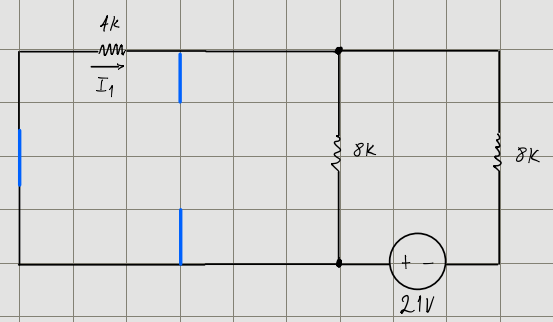

$$I_A = \frac{16}{8k} = 2mA$$

$$I_B = -5mA$$

$$\frac{4k\,(8k)^2}{12k} = \frac{32}{12} = 2.5k$$

$$R_{eq} = (8+2.5)k = 10.5k$$

$$I = 2mA$$

$$I_c = \frac{2}{3}\cdot 2m \cong 1.3mA$$

$$I_1 = I_A + I_B + I_C = 2 - 5 + 1.3 = -1.7mA$$

Q1 50 Independent Voltage Supplies, 30 Independent current Supplies, 10 VCCS, 20 VCVS, 30 CCCS, and 40 CCVS

you would need $50 + 30 = 80$ circuits using superposition