ECE285
Nathalia Peixoto

HW04 – ECE285

1. If a circuit has 210 nodes and 170 branches as well as meshes, and 20 of the branches are independent voltage supplies, 25 are dependent voltage supplies, 40 are independent current supplies, and 13 are dependente current supplies, then:
   a. How many KCL equations will we write to solve this using nodal analysis?

   b. How many KVL equations will we write for a mesh analysis solution of this circuit?

   c. Someone solved this circuit using nodal analysis. Now there is a resistor, say R9, that is between nodes NC and ND. There is a plus next to NC and a minus next to ND. What is the current through R9?

   d. Someone solved this circuit using mesh analysis. A resistor, R7, is between IA and IB (both mesh currents). IA is to the left and IB to the right of R7. If we want the current through R7 to be pointing up, what is the voltage drop across that resistor?

2. Look at both circuits below (no need to solve them)
   (a) How many KVL equations are needed to solve them using mesh analysis?
   (b) For the circuit on the left (first circuit), which method then would you choose, and why?
   (c) Which method (nodal or mesh) would you use for the circuit on the right, and why?

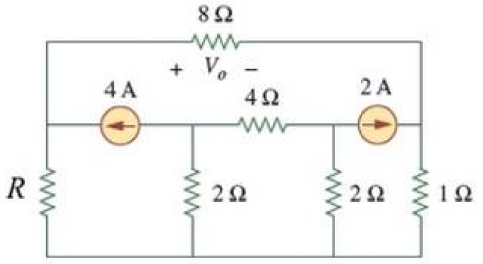

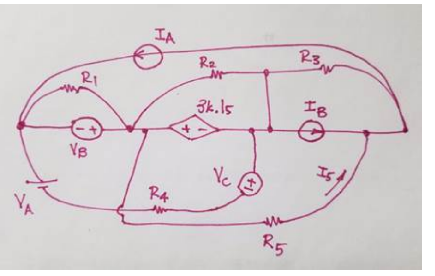

3. Write at least five expressions for the circuit below as if you were going to solve it using mesh analysis, if R2 is 16 Ohms.

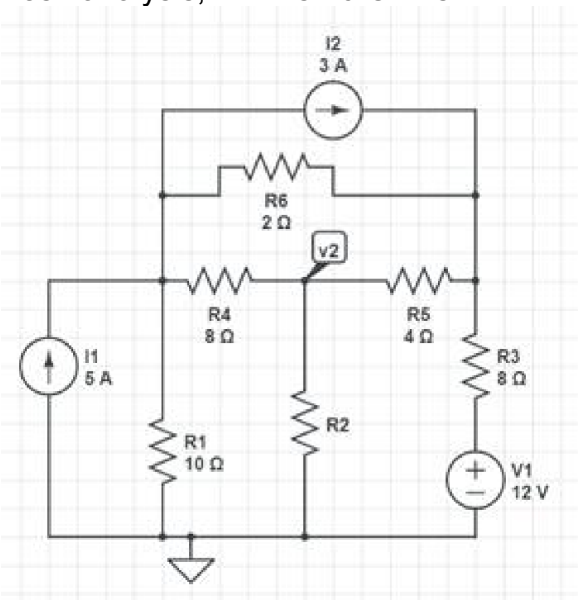

4. Replace R4 with a 15 kOhm resistor. The circuit shows an arrow (up), indicating I2 (current through resistor R2). What is that current? (solve this using mesh analysis).

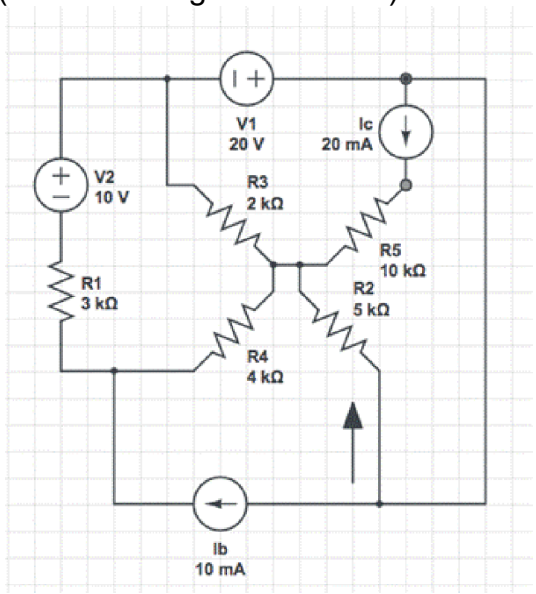

5. The 10 Ohm resistor was replaced with a resistor of value 20 Ohms. What happens when you try to find I1 using mesh analysis? Can you write one equation that solves it?

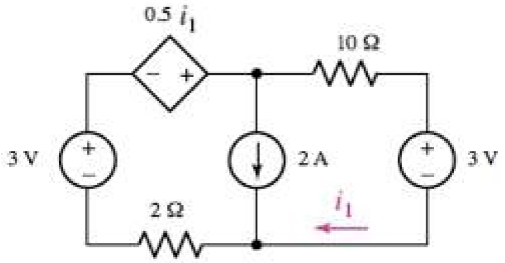

6. If R=50 Ohms, use mesh analysis and indicate the system of equations that allows us to find all mesh currents. Assume that those four currents are calculated (using a computer/calculator). Then write (in English) how you would go about finding nodal voltage “a” (Va).

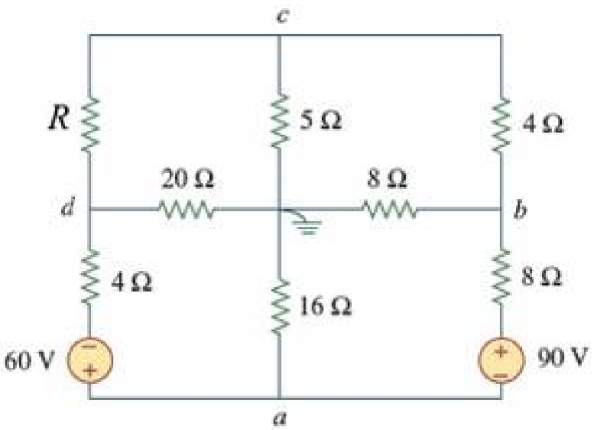

7. Find vx using mesh analysis if the 1000 Ohm resistor is replaced with a 3k Ohm resistor.

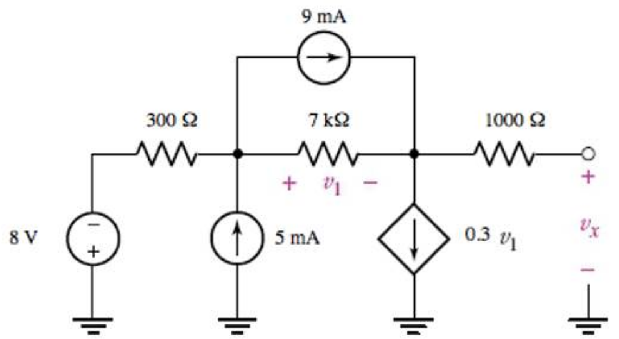

8. If R6=16 Ohms, set up the solution for the circuit below using mesh analysis. We are specifically interested in a system of equations that allows currents for all meshes to be defined (B, C, D, E, F).

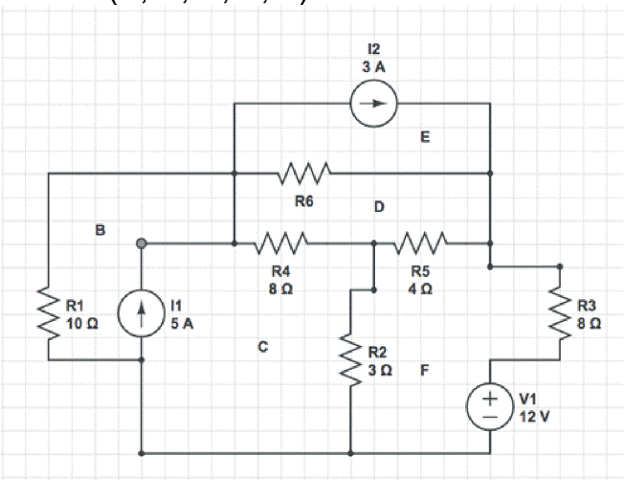

9. Write a KVL equation for the circuit above that includes at least 4 terms.

Try this exam problem, and time yourself (finishing this in less than 15 min would be optimal), as well as attempt to write this in one page. There aren't many sheets available on the exam, and one problem was that students who wrote in "large font" ran out of space. The next page is exactly what the spring 2022 students had for their first midterm, including the writeup for the problem.
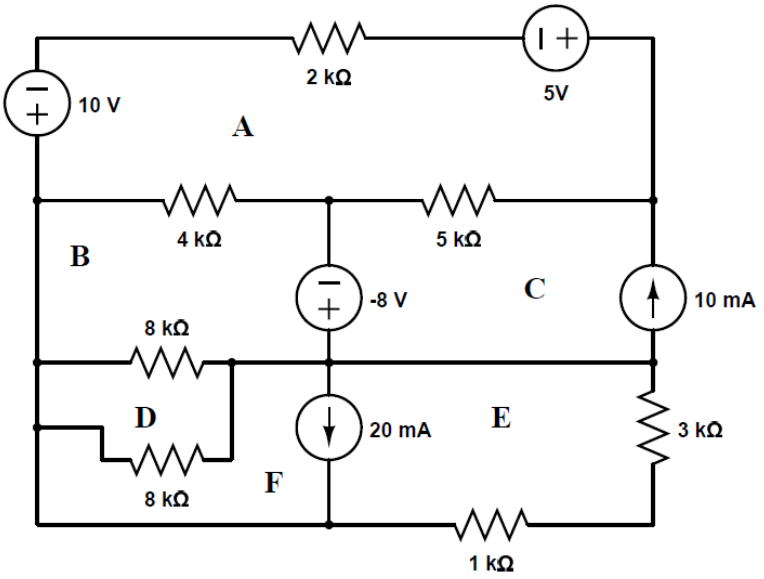
10. Set the solution up for the circuit below, without solving it, using ***mesh*** analysis. You need to write at least six equations associated with this circuit. *Label the circuit in the drawing provided*. Labeling will be graded. Use the mesh labels as indicated in the circuit. Write a system of equations that can be easily entered into a calculator/computer for its solution. ***Use only this page – be careful with space in writing equations.***