ECE285
Nathalia Peixoto

HW06

Opamps, part 2

1. What is f(x,u,t,z)?

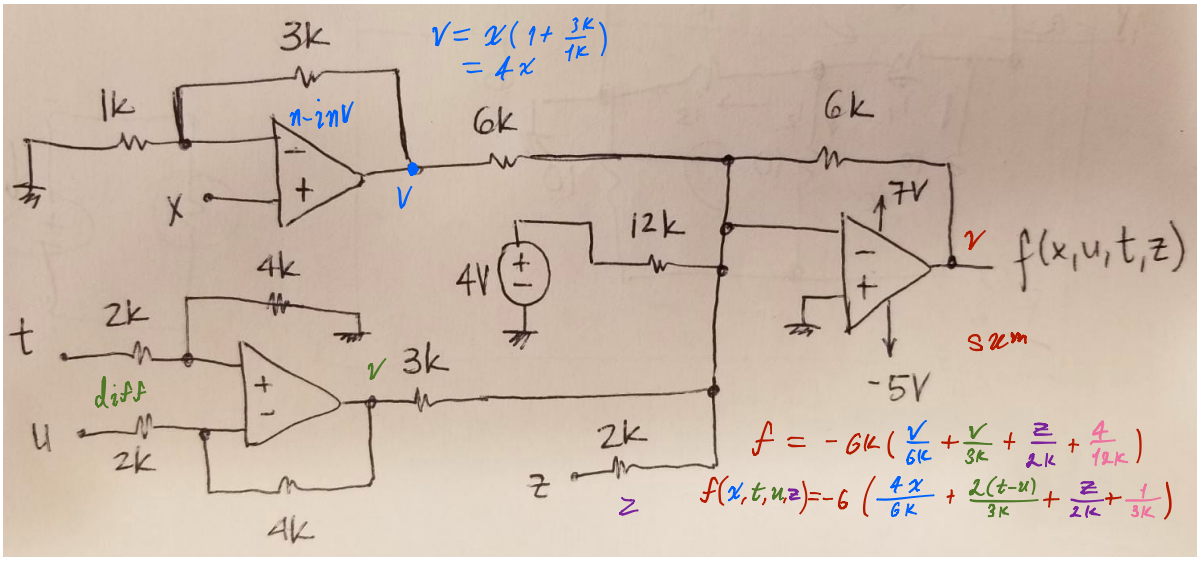

$v = x\left(1 + \frac{3k}{1k}\right) = 4x$

$f = -6k\left(\frac{v}{6k} + \frac{v}{3k} + \frac{z}{2k} + \frac{4}{12k}\right)$

$f(x,t,u,z) = -6\left(\frac{4x}{6k} + \frac{2(t-u)}{3k} + \frac{z}{2k} + \frac{1}{3k}\right)$

$v = \frac{4k}{2k}(t-u) = 2(t-u)$

2. Analyze this opamp circuit without using any shortcut formulas from traditional configurations. Find the output voltage.
Load is what the circuit has as output (in our case, often a resistor). What would be the load if we want to dissipate 50mW on it? I prefer you write Vout as a function of V2 and I1, but if you need to use numbers for these branches, you can use: V2=6V, I1=3mA, R1=1k, R2=1k, R3=3k, R4=6k Ohms.

$P = \frac{V^2}{R}$

$R_{load} = \frac{V_{out}^2}{P}$

$R_{load} = \frac{(-18V)^2}{0.050W}$

$R_{load} = 6.48k\Omega$

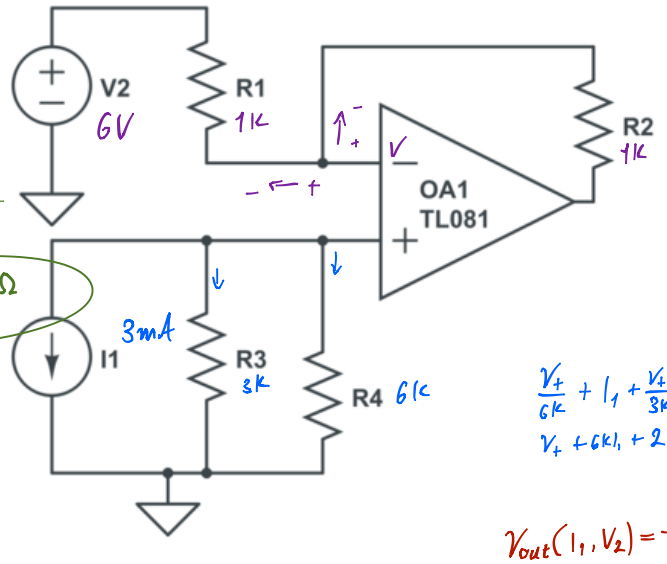

$V_{out}(V_2, I_1)$

1. Nodal

$\frac{V_- - V_2}{1k} + \frac{V_- - V_{out}}{R_2} = 0$

$\frac{V_+ - 0}{6k} + I_1 + \frac{V_+ - 0}{3k} = 0$

$V_-\left(\frac{1}{1k} + \frac{1}{1k}\right) = \frac{V_2}{1k} + \frac{V_{out}}{1k}$

$V_{out} = V_-(2) - V_2$

$V_+ = V_- = V_{in}$

$\frac{V_+}{6k} + I_1 + \frac{V_+}{3k} = 0$

$V_+ + 6kI_1 + 2V_+ = 0$

$V_+ = -2kI_1$

$V_+ = V_-$

$V_{out}(I_1, V_2) = -4kI_1 - V_2 \Rightarrow V_{out}(3mA, 6V) = -12 - 6 = -18V$

3. Find the nodal voltages in the circuit below (do not use shortcuts).

ECE285
Nathalia Peixoto

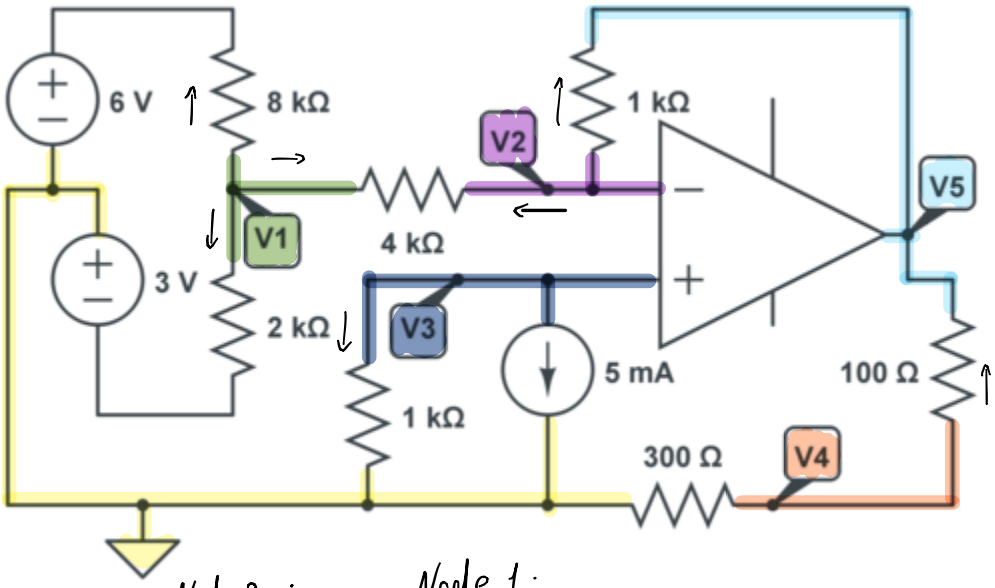

$V_2 = V_3$

Node 4:

$$\frac{V_4 - V_5}{100} + \frac{V_4}{300} = 0$$

$$V_4\left(\frac{1}{100} + \frac{1}{300}\right) - V_5\left(\frac{1}{100}\right) = 0$$

$$4V_4 - V_5 = 0$$

Node 2:

$$\frac{V_2 - V_1}{4k} + \frac{V_2 - V_5}{1k} = 0$$

$$\left(-V_1\left(\frac{1}{4k}\right) + V_2\left(\frac{1}{4k} + \frac{1}{1k}\right) - V_5\left(\frac{1}{1k}\right) = 0\right) \times 1000$$

$$-0.25\,V_1 + 1.25\,V_2 - V_5 = 0$$

Node 3:

$$\frac{V_3}{1k} + 5mA = 0$$

$$V_3\left(\frac{1}{1k}\right) = -5m$$

$$1m\,V_3 = -5m$$

$$V_3 = -5$$

Node 1:

$$\frac{V_1 - 6}{8k} + \frac{V_1 + 3}{2k} + \frac{V_1 - V_2}{4k} = 0$$

$$\left(V_1\left(\frac{1}{8k} + \frac{1}{4k} + \frac{1}{2k}\right) - V_2\left(\frac{1}{4k}\right) = -\frac{3}{2k} + \frac{6}{8k}\right) \times 1000$$

$$0.875\,V_1 - 0.25\,V_2 = -0.75$$

$$\begin{array}{l} \text{Node 3:} \\ \text{Node 2:} \\ \text{Node 1:} \\ \text{Node 4:} \\ \text{Ideal Op Amp Eq} \end{array} \begin{array}{c} \begin{array}{ccccc} V_1 & V_2 & V_3 & V_4 & V_5 \end{array} \\ \begin{bmatrix} 0 & 0 & 1 & 0 & 0 \\ -0.25 & 1.25 & 0 & 0 & -1 \\ 0.875 & -0.25 & 0 & 0 & 0 \\ 0 & 0 & 0 & 4 & -1 \\ 0 & 1 & -1 & 0 & 0 \end{bmatrix} \end{array} \begin{bmatrix} V_1 \\ V_2 \\ V_3 \\ V_4 \\ V_5 \end{bmatrix} = \begin{bmatrix} -5 \\ 0 \\ -0.75 \\ 0 \\ 0 \end{bmatrix} \xrightarrow{\text{mref}} \begin{array}{l} \text{in Volts:} \\ V_1 = -2.29 \\ V_2 = -5 \\ V_3 = -5 \\ V_4 = -1.42 \\ V_5 = -6.68 \end{array}$$

4. In the circuit below, what is the range of values that R4 can have in order to guarantee that the LED will be on?

KCL 4:

$$\frac{V_4 - 5}{1k} + \frac{V_4 + 5}{R_4} = 0$$

KCL 3:

$$\frac{V_3 - 5}{4k} + \frac{V_3 + 5}{1k} = 0$$

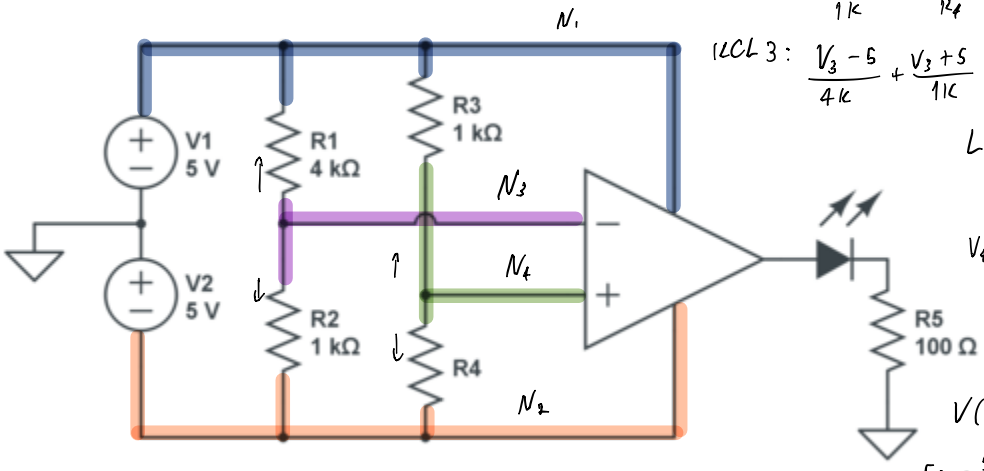

LED ON when $V_+ > V_-$

$$V_4\left(\frac{1}{1k} + \frac{1}{R_4}\right) = 5m - \frac{5}{R_4}$$

$$V_3\left(\frac{1}{4k} + \frac{1}{1k}\right) = \frac{5}{4k} - \frac{5}{1k}$$

$$V(R_4) = V_4(R_4) - V_3$$

$$\longleftarrow V(R_4) = \frac{5m - \frac{5}{R_4}}{\frac{1}{1k} + \frac{1}{R_4}} - \frac{\frac{5}{4k} - \frac{5}{1k}}{\frac{1}{4k} + \frac{1}{1k}}$$

graphing, $V(R_4) > 0$ when $R_4 > 250\Omega$

So the LED turns on when $R_4 > 250\Omega$

5. The circuit below has 8 opamps (the resistor on the left side that has a "3" on top of "2k" is of value 2kOhms, not 32kOhms). Indicate which opamps (A – H) are connected in the following configurations:

ECE285
Nathalia Peixoto
Buffer: A G
Inverting:
Non-inverting: C F
Summing: B
Difference: D
Comparator: E
Other: H
Which opamp is the output of this circuit? (one of them only) B

6. Indicate the output voltages for each opamp at t=650 ms if power supplies for all the opamps are Vcc=15V and -Vcc=0V, unless otherwise indicated.

@ $t = 0.65s$, square wave
$V_S = -0.5V$

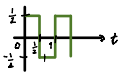

VA= 7.213V
VB= 3.048 V
VC= 0.22V
VD= -10V
VE= 5V
VF= 4.3mV
VG= 0.22V
VH= 7.213 V

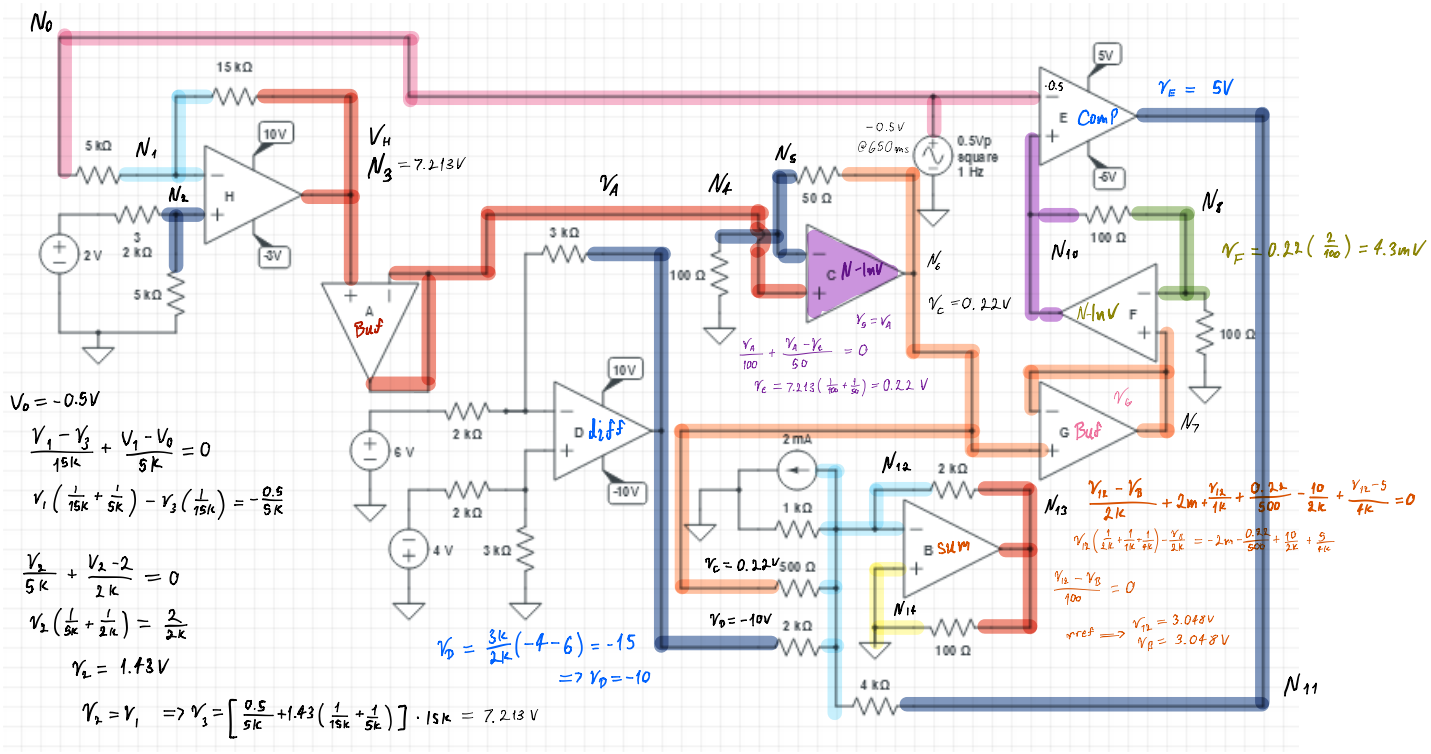

V_-:
$V_0 = -0.5V$
$\frac{V_1 - V_3}{15k} + \frac{V_1 - V_0}{5k} = 0$
$V_1(\frac{1}{15k} + \frac{1}{5k}) - V_3(\frac{1}{15k}) = -\frac{0.5}{5k}$

V_+:
$\frac{V_2}{5k} + \frac{V_2 - 2}{2k} = 0$
$V_2(\frac{1}{5k} + \frac{1}{2k}) = \frac{2}{2k}$
$V_2 = 1.43V$
$V_2 = V_1 \Rightarrow V_3 = [\frac{0.5}{5k} + 1.43(\frac{1}{15k} + \frac{1}{5k})] \cdot 15k = 7.213$ V

7. Indicate the output voltages for the circuit above at t=300 ms if power supplies for all the opamps are Vcc=5V and -Vcc=-5V for all opamps, even for the ones that show the rails.

@ $t = 300ms$ $V_S = 0.5V$

VA= 4.2V
VB= -0.808 V
VC= 0.13V
VD= -5V
VE= -5V
VF= 2.5 mV
VG= 0.13V

ECE285
Nathalia Peixoto
VH= 4.2 V

8. Design a circuit that provides outputs only between 0 and 20V. The circuit has 4 inputs and it evaluates the function f(x,y,z,t)=0.001x+100y-25z-0.1t-20 (V). You have up to 4 opamps (but attempt a design with 3 or even just 2 of them).

9. Design a circuit that uses only resistors that are multiples of 10 (1, 10, 100, 1k, 10k, etc) resistors. The circuit should provide outputs only between -5V and 5V. The circuit has 4 inputs and it evaluates the function f(n,g,h,t)=15+0.01n-125g+13h-20t. You have up to 4 opamps (but attempt a design with 3 or even just 2).

10. Design a circuit that turns an LED on when a voltage goes below 4.5V. Use as many resistors as you want but only 10k Ohms, and only one opamp. You need to show the power connections.

8

f