ECE285
Nathalia Peixoto

HW07 – ECE285F24
TEC and NEC, source transformation, superposition
(11 questions)

1. Use source transformation to find vx in the circuit below if V=70V. Be careful; the 12 Ohm resistor can't be source transformed. When finding the Vx, realize (contemplate?) that it is also the Vth for this circuit. (The 12 Ohms is not the load here.)

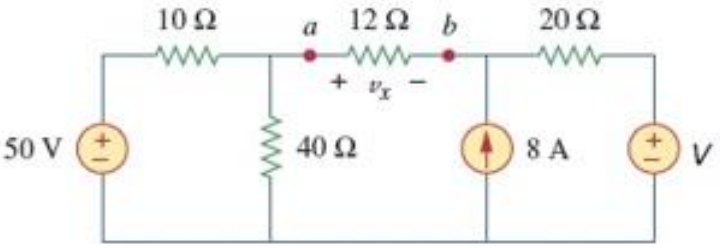

2. What is the TEC and NEC for the circuit below? (notice there is a load, indicated by "RL", between c and d terminals – this means the question is related to that).

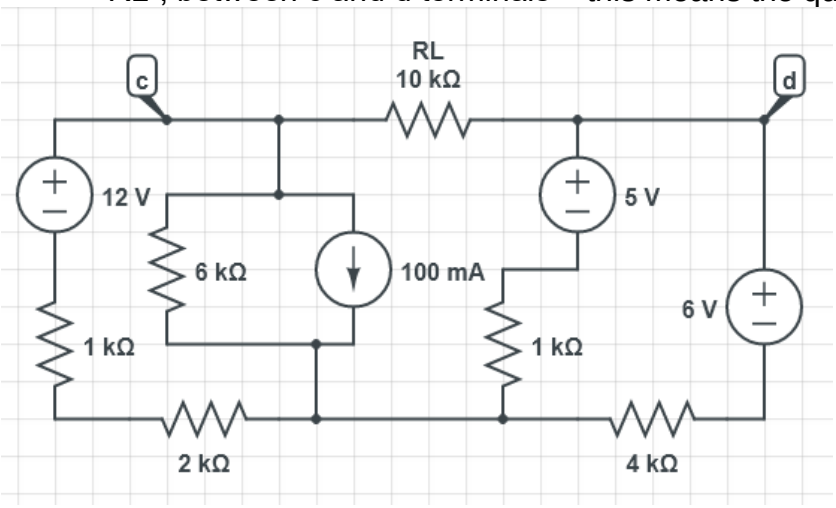

3. (a) find the TEC for the circuit below

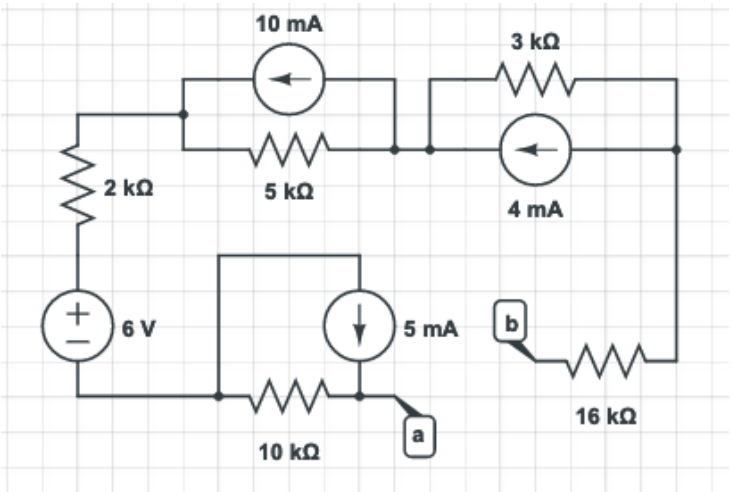

(b) find the NEC between nodes E and C.

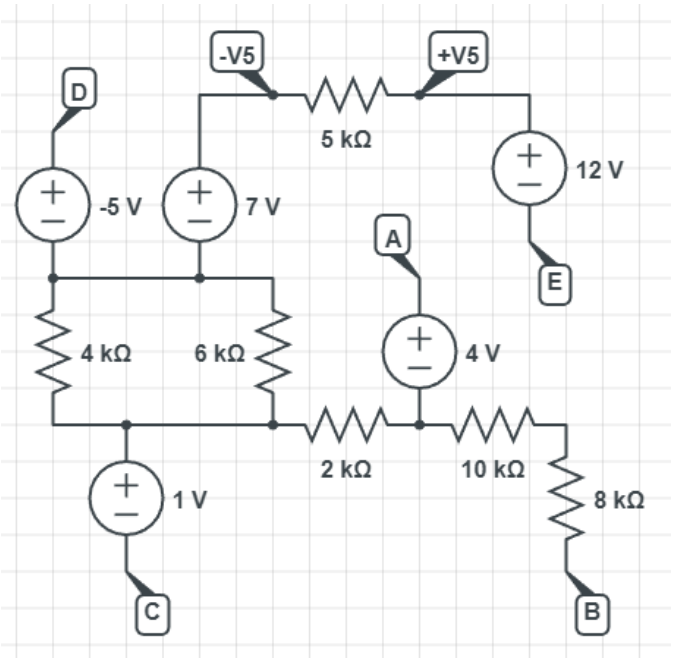

4. Find the NEC between a and b if R1= 18 kOhms and R2= 58 kOhms. Current (In) should be given in mA and the resistance (Rn) in kOhms. Make sure to draw Isc going down, from a to b.

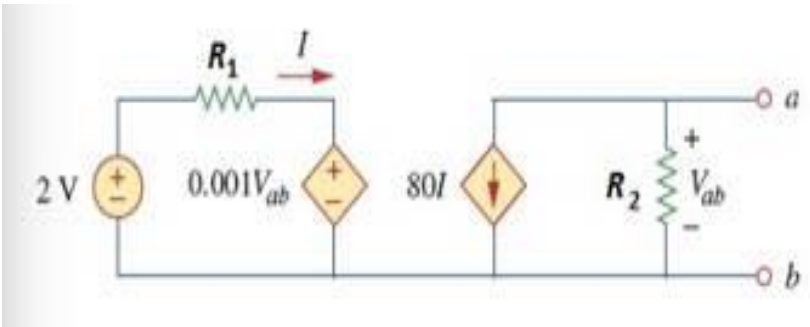

5. Find the Rth between a and b if R= 40 Ohms.

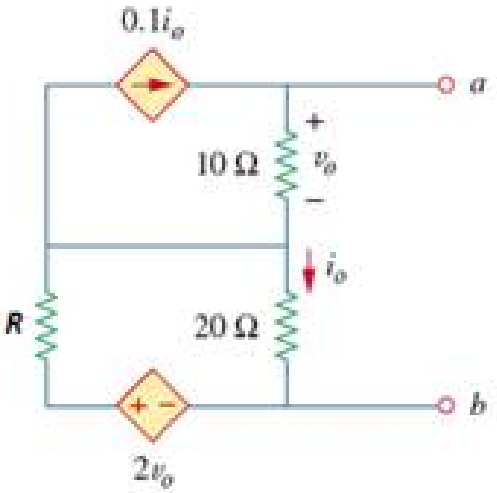

****EXAM QUESTION*** (when trying this as a homework assignment, read the prompt in detail - this will be similar to the prompt in the exam for a 20 pt question).*

6. The circuit below does not show the load. Find the Norton equivalent between nodes a and b. Show your work and indicate which circuit analysis method you are using (for partial credit). You need to use the **test source** method. Rn is worth 15 points. In is worth 5 points (show your work in detail when finding Rn, but it is okay to just indicate how you will find In and not do all calculations for it) (20 pts).

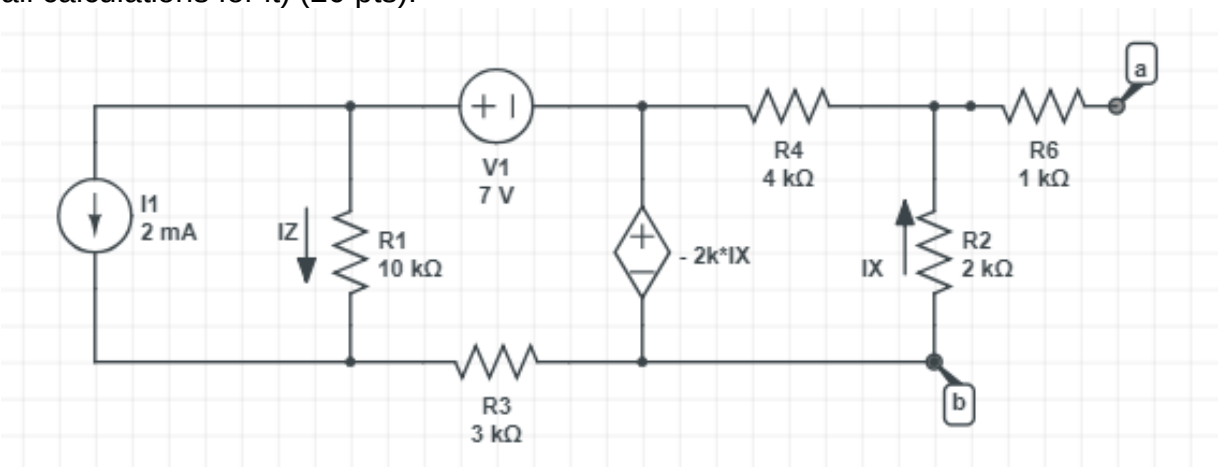

7. The circuit below does not show the load. Find the Thevenin equivalent between a and b if the 1 kOhm resistor is replaced by a 2 kOhm.

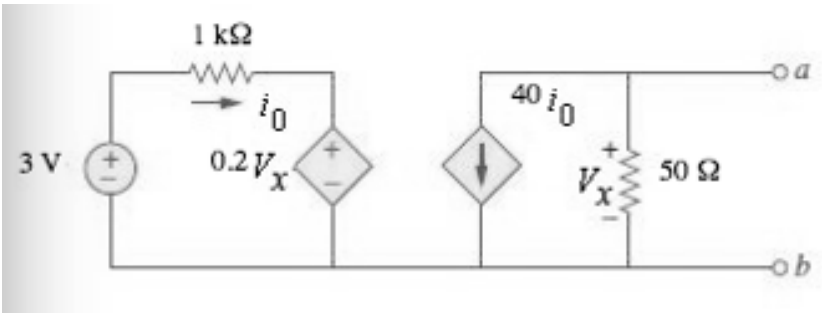

8. Find the NEC as seen by the current supply if the 40 Ohm resistor is replaced by 60 Ohms. (Hint: use the current source as load).

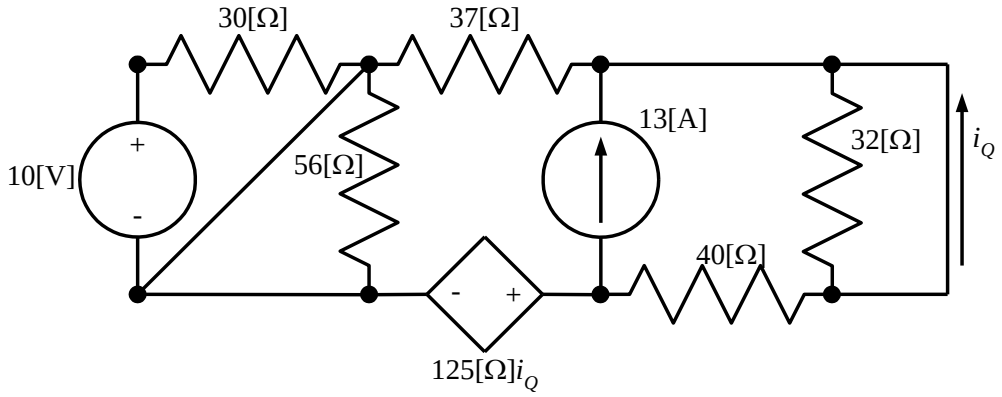

9. Find the NEC for the circuit below if R3 is 6 kOhms.

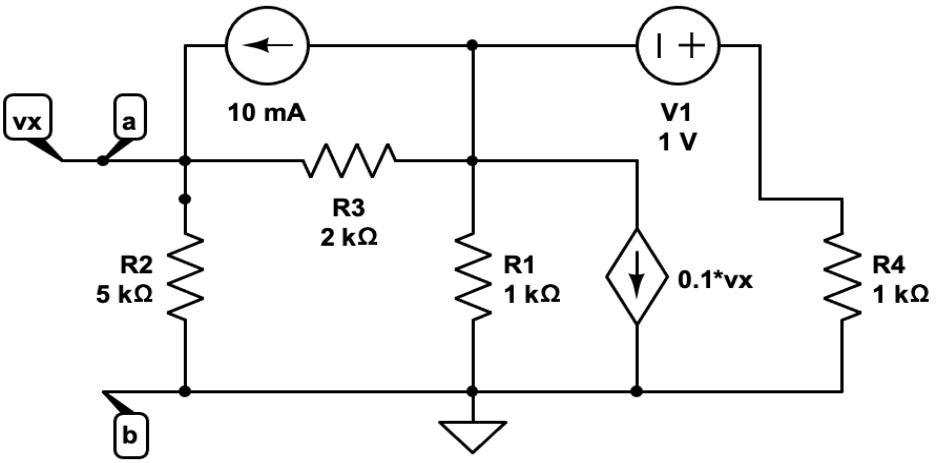

10. Use source transformation to simplify this circuit as much as possible (probably to one voltage supply and 2 resistors). Source transformation can be used for dependent sources the same way as independent sources are transformed.

Tip: the 5k Ohm resistor needs to be “kept” in the final circuit, because the voltage drop across that resistor is used in the dependent source.

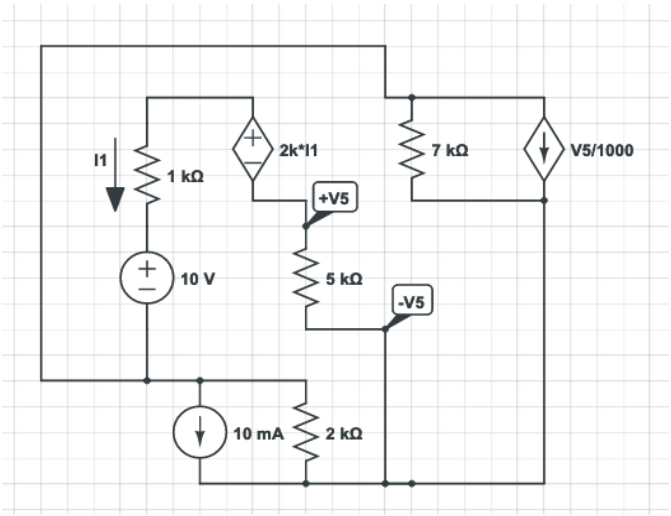

11. If a circuit has 200 nodes, 100 meshes, 30 dependent current supplies, 20 independent voltage supplies, 10 dependent voltage supplies, and 15 dependent current supplies, how many circuits do you need to solve to find a voltage across a resistor? After solving those circuits, how do you actually get the final value for the voltage on that resistor?