ECE285

Electric Circuit Analysis I

Table of Contents

Lab 1	6
Lab 2	10
Lab 3	12
Lab 4	15
Lab 5	17
Lab 6	20
Lab 7	23
Lab 8	26
Lab 9	28
Lab 10	30

Equipment and components

- 2 x 1 kΩ resistor
- 2 kΩ resistor
- 2.2 kΩ resistor
- 3 x 3 kΩ resistor
- 4.7 kΩ resistor
- 5 kΩ resistor
- 8.2 kΩ resistor
- 15 x 10 kΩ resistors
- 2 x 100 kΩ resistors
- 1 mH inductor
- 1 μF capacitor
- 4.7 nF capacitor
- 4 X LF356N
- 2 x LED
- 9 V battery
- 9 V battery snaps
- 10k Ohm potentiometer

Lab Reports

Background: these 9 experiments are designed as simple building blocks (like Legos) and students are expected to use those to build bigger projects, or to think about what they could do. The electric circuits projects (any other engineering projects you do in your life!) should leverage those concepts and debugging experience.

If lab X had an idea about building a bridge, and lab X+1 was a cabin, the lab report could talk about building a cabin on top of a bridge, or bridges that lead to a castle. This is a simple concept ("building blocks"), so the lab report is the chance students have to show that they can successfully build upon those blocks. What students build with the blocks is up to them, not to the instructor nor to the TA.

Certain qualities make a report closer to the highest grade:

- Good written English;
- Sentences with subject, verb, and object;
- No answers from the lab (those are for the TA to look at during the lab time);
- Good insights on where to use the concepts you looked at and played with in the lab;
- Two to four paragraphs, written without AI help (but you are welcome to first discuss with a genAI so you have good ideas about what to write;
- Submission through Canvas by uploading a pdf. Lab reports will be checked for plagiarism through the Canvas site.
- Leveraging concepts from other ECE classes.

If you received a "zero" for your lab report, check that one or more of these apply:

- You didn't show up at the lab.
- You submitted images, with no text.
- You submitted "I did not learn anything in this lab" or similar sentences.
- You submitted the lab report outside of Canvas.

Students are encouraged to resubmit their lab reports for maximum grade (i.e. 10). Once students receive the instructor's feedback, they have one week to resubmit their revised version.

Laboratory 1

Component Tolerances, Ohm's Law and Kirchhoff's Laws

Objectives: This lab is designed to reinforce the concepts of the following concepts: Ohm's law, Kirchhoff's laws, and tolerance of the components, i.e., resistors.

Before starting the lab, you are required to present the results of the circuits and simulations using CIRCUITLAB. If you do not come to the lab prepared, you will not be allowed to run the experiments, and no report will be accepted.

Instructional Video: https://youtu.be/Gjzp3qCMTg0

1. **Component Tolerances**

Pre-lab:

A. Assume you have 10 resistors with following color bands brown, black, red, and gold. Also assume the resistors are within tolerance Calculate the expected average of the ten resistors. What is the lowest possible resistance and the highest possible resistance, and why?
B. Cite an example of a project where component tolerance is important.
C. What is the difference in cost between a 5% tolerance and a 0.1% tolerance resistor? Where did you find that information?

Experimental Set-up:

A. Gather the fifteen 10 kΩ resistors from your lab kit by looking at the color code. Measure the resistance of each one using a digital multimeter (DMM) and tabulate the data.
B. Calculate the mean of the measured values as well as the standard deviation. Show the formulas you used.
C. Is the mean value close enough to the nominal value? Discuss your results in view of the predicted mean from item 1.1.Pre-lab.A.

2. Ohm's Law

In this experiment, you will verify Ohm's law. Consider the circuit diagram below.

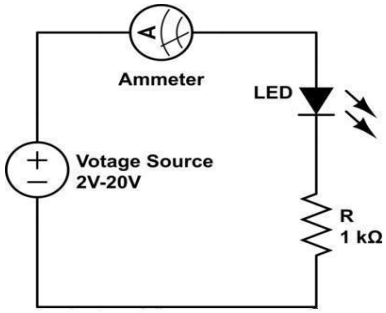

Figure 1.1

Pre-lab:

A. If the voltage in the circuit is 5 V, calculate the current flowing in the circuit. What happens to the current if the voltage in the circuit is doubled and how does this relate to Ohm's law?
B. For which voltage of the source does the LED begin to illuminate? Explain your reasoning. (HINT: Look at a datasheet)

   A potentiometer is a variable resistor that can be set at any resistance from 0 to the maximum value of the potentiometer (e.g. 10kOhms).
   Below is a schematic of a potentiometer. When you use this as drawn below, the resistance between 1 and 3 (R13) plus the resistance between 3 and 2 (R32) is equal to the total potentiometer resistance (Rpot). Rpot=R13+R32. You will need this later in ECE285 (during the lectures on operational amplifiers).
   When designing circuits we often short the wiper (middle terminal, #3) to one of the end-terminals (often terminal 2) so that by turning the pot one goes from 0 to max resistance between terminals 1 and 3 (or between 1 and 2).

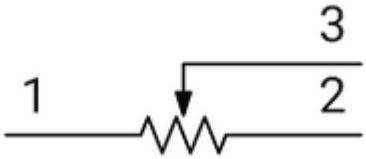

C. Now assume you have a potentiometer, an LED, and a 3 V battery. Short terminals 2 and 3. Design a dimmer on paper (draw the circuit). What happens when the pot is set so that R13=0? And when R13=1k?

Experimental Setup:

A. Wire up the circuit like figure 1.1 (LED, 1 kΩ resistor, ammeter, voltage source) on a breadboard.

B. Adjust the voltage source in increments of 2 V from 2 V up to 20 V. For each voltage, record the current, I, and tabulate the data.

C. Repeat the experiment with a 10 kΩ resistor instead of a 1 kΩ resistor.

D. Prepare plots that show voltage (on the x-axis) and current (on the y-axis) for both the resistors. Does it make a difference whether you have the LED in the circuit or not? Why?

E. Wire up a circuit as shown in figure 1.2. Sweep the potentiometer and record some (5 or so) values of voltage and current (use a voltmeter and an ammeter) while changing potentiometer from 0 to max (10kOhms).

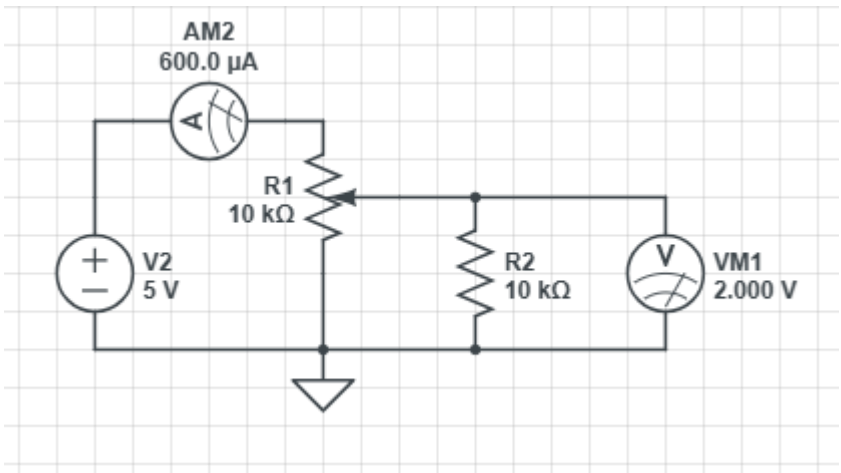

Figure 1.2

3. Kirchhoff's Law

In this experiment, you will verify both Kirchhoff's laws. Consider the following circuit diagram.

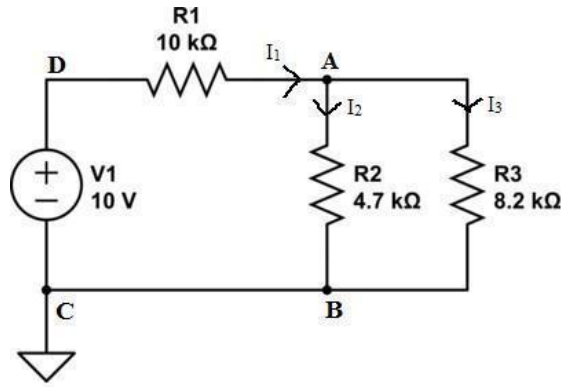

Figure 1.3

Pre-lab:

A. Consider figure 1.3. What is the equivalent resistance between D and C?
B. What is the power provided by the voltage source? What is the power dissipated by the 8.2 kΩ resistor? (HINT: These are not the same)
C. Propose a method to measure the power in the lab (when you have built the circuit), how will you go about measuring power provided by the source, and consumed by the 8.2 kΩ resistor? Explain in a paragraph or so.
D. Does the power rating of the resistor need to be less than or greater than the power dissipated by the resistor? Why?
E. Look at your 10 kΩ estimate their power rating. How did you get about estimating power rating? (HINT: A quick Internet search should show common ratings)

Experimental Set-up:

A. Make a spreadsheet and indicate the following voltages and currents: V_{CD}, V_{AB}, V_{DA}, I_1, I_2, and I_3.
B. Wire up the circuit in figure 1.2. Utilize the benchtop power supply to supply voltage to the circuit.
C. Measure the voltages V_{CD}, V_{AB}, V_{DA} using a multimeter. Also, measure the currents I_1, I_2, and I_3 which are the current across resistors R_1, R_2, and R_3, respectively. Make sure the color-coding of the multimeter's leads is correct to determine the sign of each voltage and current.
D. How does the sum of voltages V_{AB} and V_{DA} relate to V_{CD}? How can this relationship be explained by Kirchhoff's Voltage Law?
E. How does the sum of currents I_2 and I_3 relate to I_1? How can this relationship be explained by Kirchhoff's Current Law?

Laboratory Report Question

In your laboratory report, address the following:

1. **Verification of Circuit Laws**
   Explain how your experimental results demonstrate the relationship between **Ohm's Law** and **Kirchhoff's Voltage Law (KVL)** and **Kirchhoff's Current Law (KCL)**. Discuss how measured voltages and currents support these laws, and compare your experimental results with theoretical calculations.
2. **Effect of Component Tolerances**
   Discuss how resistor and component tolerances influenced your measurements. Explain why small deviations from theoretical values occurred and identify **real-world applications** where component tolerances are critical and must be carefully considered.
3. **Potentiometer-Based Circuit Design**
   Design a **dimmer switch and a voltage divider using a potentiometer**.
   - Draw a clear circuit diagram.
   - Explain the operation of each circuit.
   - Perform a **mathematical hand analysis** to show how the output voltage or load current varies with the potentiometer position.

Grading Rubric

Criterion	Description
Ohm's Law Verification	Clear and accurate explanation showing agreement between theory and experimental data
Kirchhoff's Laws	Correct interpretation and application of KVL and KCL using measured results
Component Tolerances	Insightful discussion of tolerance effects and relevant real-world applications
Circuit Design & Analysis	Correct circuit diagrams and clear mathematical explanation
Clarity & Organization	Well-organized, grammatically correct, and clearly written report

Laboratory 2

Series and Parallel Resistors /PSPICE INTRO

Objectives: This lab is to experimentally verify the rules for finding the equivalent resistance of resistors connected both in series and parallel. Before starting the lab, you are required to present results of circuits and CIRCUITLAB simulations.

Instructional Video: https://youtu.be/729np6vwwMs

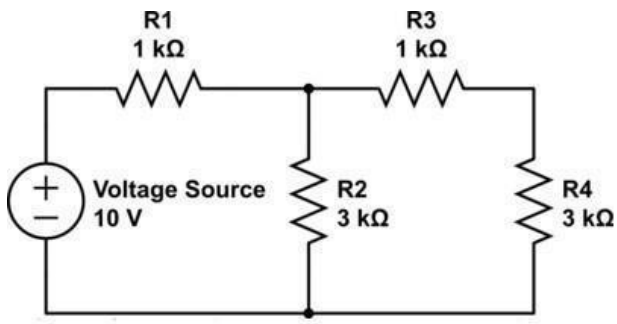

Figure 2.1

1. **Series and Parallel Resistors**

Pre-lab:

A. Calculate the equivalent resistance in a circuit with two resistors each with a resistance of 5 kΩ connected in series. Also, calculate the equivalent resistance when they are connected in parallel and explain how you determined it.
B. If the voltage across a 2 kΩ resistor is 5 V, then what is the voltage across a 4 kΩ resistor connected in parallel to it and why?
C. Consider two resistors, R_1 and R_2, connected in series, then what happens to the current across R_2 if the resistance of R_1 is increased and why?
D. Calculate the equivalent resistance of the circuit in figure 2.1.
E. If a multimeter was used to measure resistance between the terminals of R_3, and the voltage source is disconnected (open circuit), what is the resistance value the multimeter should display? Why?
F. If you do the same as in item E, but on the terminals of R_1, what is the resistance you would be measuring?
G. Draw a schematic for Part D to compute the equivalent resistance of the circuit using Circuitlab and compare your results. Circuitlab schematics for parts A-C are not required.

Experimental Set-up:

A. Wire up the circuit in figure 2.1 on the breadboard.
B. Measure the equivalent resistance of the circuit using a digital multimeter. Measure the resistances R_3 and R_1 with the voltage source disconnected. Did you find what you expected? (Discuss that finding in your report)
C. Compare the theoretical values with the measured values. Is the rule for finding the equivalent resistance of resistors connected both in series and parallel verified? How?

2.Pspice Intro

In-Lab:

A. Install PSPICE per the installation manual
B. Open a new project using PSPICE Analog and give it a name. Create it as a blank project.
C. Construct the circuit below utilizing a Voltage Source (Sine), diode, capacitor, and resistor. These items can be found under the "Place" tab

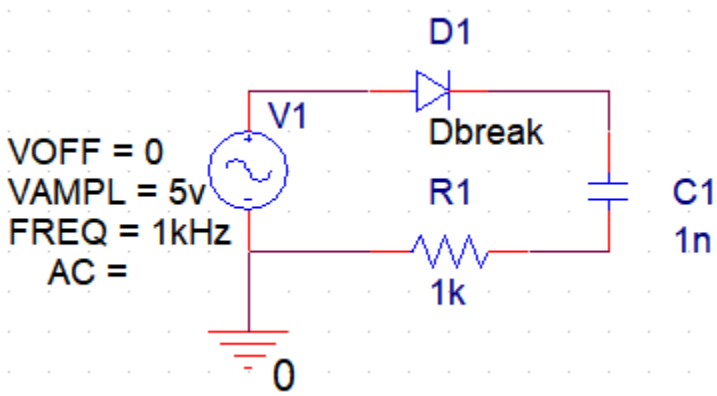

Figure 2.2

D. Place a voltage level marker at the junction of D1\C1 and another at V1/D1
E. Under the "Pspice" tab, click new simulation profile and give it a name.
F. Run a time domain (transient) simulation starting from 1s to 1.01s.
G. If you start the simulation at zero, how do the graphs differ from starting the simulation at a later time?
H. The circuit diagram should be included (with any voltage markers/probes) in your lab report along with any graphs of the data

Laboratory Report Guidelines

In your laboratory report, address the following points:

1. **Equivalent Resistance Analysis**
   Discuss whether your experimentally measured equivalent resistances matched the theoretical values for both **series** and **parallel** resistor configurations. Compare your calculated results with measurements obtained from the breadboard experiment. Additionally, explain how your **PSPICE simulations** supported, reinforced, or challenged the experimental results.
2. **Diode Logic Gate Design**
   Using circuit simulation software, design **AND** and **OR** logic gates implemented with diodes. Clearly present the circuit schematics and explain the operating principle of each gate based on diode conduction and logic levels.

Grading Rubric

Criterion	Description
Theory vs. Experiment	Clear and accurate comparison between theoretical calculations and experimental measurements
PSPICE Integration	Effective discussion of PSPICE simulation results and their relationship to breadboard measurements
Discrepancy Analysis	Thoughtful reflection on discrepancies, including possible sources of error such as component tolerances, wiring issues, or measurement limitations
Writing Quality	Clear organization, proper grammar, and professional technical writing

Laboratory 3

Node Analysis Methods

Objectives: Analyze (first) and build (second) a circuit using mesh or node analysis. Before starting the lab, you are required to present the calculations and PSPICE results.

Instructional Video: https://youtu.be/scRMGSs_LI0

1. **Node Analysis:**

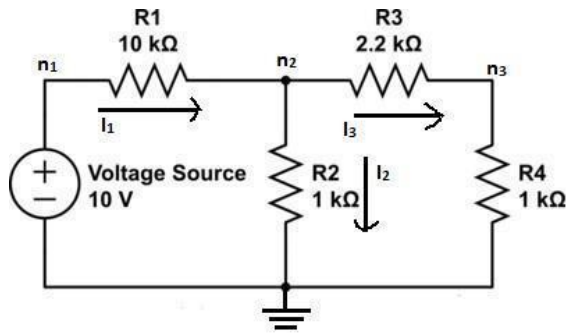

Figure 3.1

Pre-lab:

A. If the voltage across resistor R_2 is V_2, then what is the voltage across resistor R_4 in terms of V_2? Show your calculations.
B. Determine the voltages at nodes n_1, n_2, and n_3 for the circuit in figure 3.1. Calculate the currents I_1, I_2, and I_3 for the same circuit. Support the calculation with equations.
C. Simulate the circuit in Circuitlab, and present simulation results.

Experimental Set-up:

A. Wire up the circuit in figure 3.1 on the breadboard.
B. Using the digital multimeter measure the voltages at nodes n_1, n_2, and n_3, and also the currents I_1, I_2, and I_3.
C. Comment on the experimental results by comparing them with calculated results.
D. Show the circuit in your report with appropriate polarities.

2. Nodal Analysis with Current-Dependent Voltage Source

In lab:

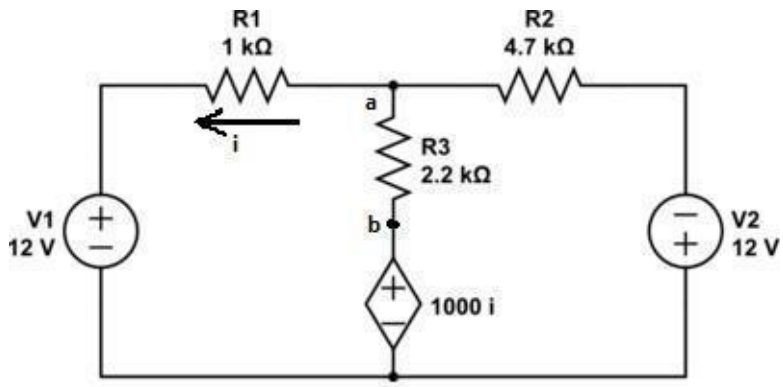

Figure 3.2

Pre-lab:

A. Determine the current "i" through the resistor R_1 for the circuit in figure 3.3.A.
B. Calculate the voltage V_{ab} for the circuit in figure 3.2.

Experimental Set-up:

A. Wire up the circuit in figure 3.2 on the breadboard in the lab. The dependent source in the circuit should be created manually by using a meter to measure "i", then calculating "1000 i". Next, adjust the variable source to the calculated value by watching a second meter. You will have to do several attempts until you have a final agreement between "i" and "1000 i".
B. Using a multimeter in the lab, measure the voltage V_{ab} for the circuit in figure 3.2.
C. Compare the experimental and theoretical results.
D. Explain how nodal analysis was used to calculate V_{ab} and is it verified? (Support the explanation with equations)

Laboratory Report Guidelines

In your laboratory report, address the following:

1. **Nodal Analysis and Circuit Verification**
   Explain how **nodal analysis** was used to predict node voltages and branch currents in your circuit. Compare the results obtained from **hand calculations**, **PSPICE simulations**, and **experimental measurements**. Discuss whether the results agree and identify any discrepancies, including possible sources such as component tolerances, measurement error, or modeling assumptions.

2. **Effect of Reversing Current Direction**
   Re-solve **Figure 3.2** assuming the direction of the indicated current is reversed. Clearly show the revised nodal equations, the calculated current value, and explain the physical interpretation of the sign of the result.

Grading Rubric

Criterion	Description
Nodal Analysis	Clear explanation of the nodal analysis method and correct presentation of results
Theory–Simulation–Experiment Comparison	Effective comparison between analytical calculations, PSPICE simulations, and experimental data
Discrepancy Analysis	Thoughtful discussion of discrepancies and plausible explanations
Writing Quality	Clear, well-organized, and grammatically correct technical writing

Laboratory 4

Mesh Analysis Methods

Objectives: Analyze (first) and build (second) a circuit using mesh or node analysis. Before starting the lab, you are required to present the calculations and PSPICE results.

Instructional Video: https://youtu.be/scRMGSs_LI0

1. Mesh Analysis

In lab:

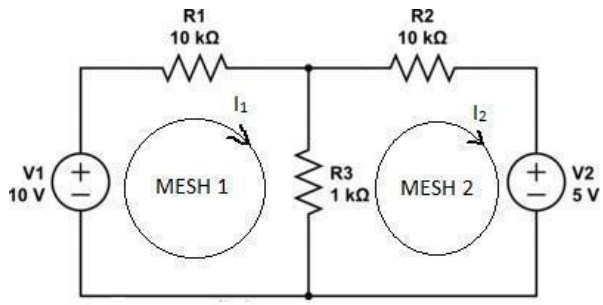

Figure 4.1

Pre-lab:

A. Determine current I_2, across the resistor R_2 in terms of I_1, R_2, and R_3. How is it determined?
B. Calculate currents I_1 and I_2 for the circuit in figure 4.1.
C. Simulate this circuit in Circuitlab and present results.

Experimental Set-up:

A. Wire up the circuit in figure 4.1 on the breadboard.
B. Measure the currents I_1 and I_2 using a digital multimeter.
C. Compare the experimental results with theoretical results. Is the mesh analysis method verified?
D. Explain in one paragraph when you would use nodal analysis versus mesh analysis.
E. Show the circuit in your report with appropriate polarities.

2. Mesh Analysis with Current-Dependent Voltage Source

In lab:

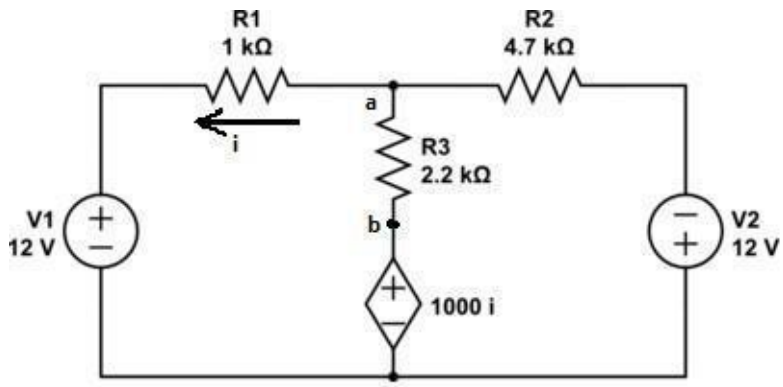

Figure 4.2

Pre-lab:

C. Determine the current "i" through the resistor R_1 for the circuit in figure 3.3.A.
D. Calculate the voltage V_{ab} for the circuit in figure 4.2.

Experimental Set-up:

E. Wire up the circuit in figure 4.2 on the breadboard in the lab. The dependent source in the circuit should be created manually by using a meter to measure "i", then calculating "1000 i". Next, adjust the variable source to the calculated value by watching a second meter. You will have to do several attempts until you have a final agreement between "i" and "1000 i".
F. Using a multimeter in the lab, measure the voltage V_{ab} for the circuit in figure 4.2.
G. Compare the experimental and theoretical results.
H. Explain how mesh analysis was used to calculate V_{ab} and is it verified? (Support the explanation with equations)

Laboratory Report Guidelines

In your laboratory report, address the following:

1. **Verification of Mesh Analysis**
   Reflect on how **mesh analysis** was verified through your experimental results. Explain how the measured loop currents and voltages supported the theoretical mesh equations. Additionally, discuss situations in which **nodal analysis** would be preferred over mesh analysis, and justify your choice based on circuit characteristics and practical considerations.

2. **Effect of Changing Dependent Source Polarity**
   Using both **hand analysis** and **circuit simulation**, re-analyze **Figure 4.2** with the polarity of the dependent source reversed. Clearly present the modified mesh equations, the resulting currents and voltages, and compare the analytical and simulated results.

Grading Rubric

Criterion	Description
Mesh Analysis Verification	Correct and clear explanation of how mesh analysis was validated experimentally
Mesh vs. Nodal Comparison	Thoughtful and accurate comparison between mesh and nodal analysis methods
Practical Insight	Meaningful discussion of when and why each analysis method is applied
Writing Quality	Clear organization, proper grammar, and professional technical writing

Laboratory 5

Inverting and Non-Inverting Amplifiers

Objective: Investigate the input to output relationship of inverting and noninverting amplifiers. The op-amp (short for operational amplifier) is one of the most widely used devices in analog integrated circuits design. You can find information about the specifications and performance measures of an op-amp from the manufacturer's datasheet.

Instruction Video: https://youtu.be/zaPHHuwxlLA

1. Inverting Amplifier

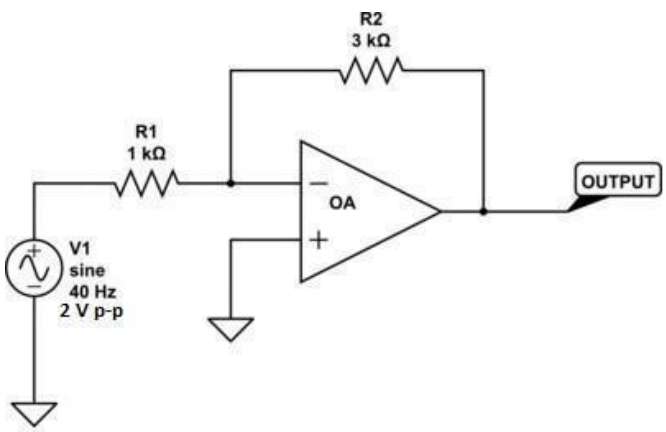

Figure 5.1

Pre-lab:

A. Read the datasheet of LF 356, and write down the typical values of the parameters like supply voltage, power consumption, input resistance, input offset voltage, output resistance, the input offset current, and voltage gain.
B. Write down the pinout diagram of LF 356.
C. Calculate the closed-loop voltage gain of an inverting amplifier. How would you comment on the phase of the output signal compared to the input signal in an inverting amplifier?
D. Why is the circuit in figure 5.1 called an inverting amplifier? What is the significance of the feedback resistor, R_F, and input resistor, R_{in}?
E. How can you create an Inverting Buffer using the same configuration of an inverting amplifier?
F. Design an inverting amplifier with an input resistance 2 kΩ and output resistance of 100 Ω with an open-circuit voltage gain of −30. Draw the circuit and explain the calculations.

G. Simulate the circuit in figure 5.1, and present the simulation results.
H. Explain the relation between input and output from the plots.

Experimental Setup:

A. Wire up the circuit in figure 5.1 on the breadboard.
B. Supply +10 V and -10 V to Vcc^+ and Vcc^- of the om-amp, respectively. Give the input to the inverting terminal of the op-amp and simultaneously display the input and output on the oscilloscope.
C. How would you use an inverting amplifier to add a DC offset to the output? Use an oscilloscope to display the output.

2. Non-Inverting Amplifier

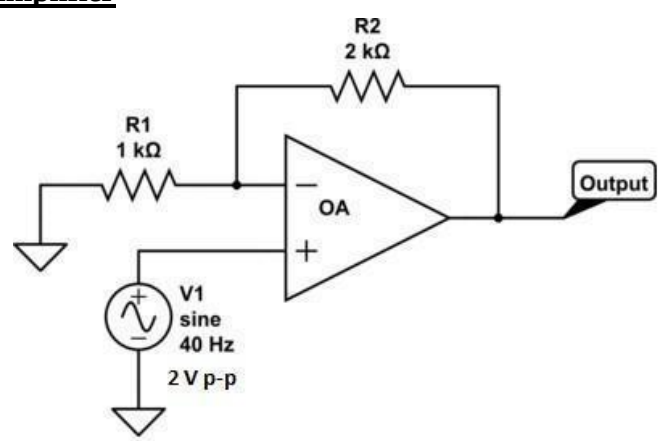

Figure 5.2

Pre-lab:

A. Calculate the closed-loop voltage gain of a non-inverting amplifier. How would you comment on the phase of the output signal compared to the input signal in a non-inverting amplifier?
B. Why is the circuit in figure 5.2 is called a non-inverting amplifier?
C. How can you create a voltage follower from the same configuration of a noninverting amplifier?
D. Design a non-inverting amplifier which has an input resistance of 10 kΩ, an open circuit voltage gain of 20, and an output resistance 600 Ω. The feedback network is specified to draw no more than 0.1mA from the output of the op-amp when the open-circuit voltage is in the range $-10V \leq Vo \leq 10V$. Draw the circuit and explain the calculations.
E. Simulate this circuit in PSPICE, and present the simulation results.
F. What can you observe from the plots? Explain the input to the output relationship of the amplifier.

Experimental Setup:

A. Wire up the circuit in figure 5.2 on the breadboard.
B. Supply +10 V and -10 V to Vcc^+ and Vcc^- of the om-amp, respectively.
C. Give the input to the non-inverting terminal of the op-amp, and simultaneously display the output and input of the amplifier on the oscilloscope.

3. Op-Amp Saturation

The output of an op-amp is limited by the voltage you provide to it. When the op-amp is at maximum or minimum extreme, it is said to be saturated.

A. Use any of the circuits from above (inverting or non-inverting) and demonstrate how you would saturate an op-amp. (Use an oscilloscope for the output).
B. How can you keep an op-amp from saturating?

Laboratory Report Guidelines

In your laboratory report, address the following:

1. **Inverting and Non-Inverting Amplifier Behavior**
   Describe and compare the experimental behavior of **inverting** and **non-inverting op-amp amplifiers**. Explain the role of **negative feedback** in determining gain, stability, and linear operation. Discuss how **op-amp saturation** was observed experimentally and identify the operating conditions that led to saturation.
2. **Howland Current Pump Circuit**
   Explain the operating principle of the **Howland current pump** circuit. Design a Howland current pump capable of delivering a **1 mA load current**. Provide the circuit schematic and support your design with **hand calculations** and **simulation results**, clearly demonstrating proper current regulation.

Grading Rubric

Criterion	Description
Amplifier Comparison	Clear and accurate explanation of inverting versus non-inverting amplifier behavior
Feedback Insight	Demonstrates understanding of the role of feedback in op-amp operation
Op-Amp Saturation	Clear discussion of saturation effects and experimental observations
Circuit Design & Analysis	Correct explanation and design of the Howland current pump
Writing Quality	Well-organized, clear, and grammatically correct technical writing

Laboratory 6

Op-amp Circuit Analysis

Objective: Investigate the input to output relationship of an opamp integrator and differentiator circuit. You should have simulation results from PSPICE before coming to the lab.

Instruction Video: https://youtu.be/QxtnFJd5tFU

1. Resistors in AC Circuits

Many electrical circuits involve direct current (DC current). However, there are considerably more circuits that operate with alternating current (AC current), when charges flow reverse direction periodically.

Pre-lab:

A. Using PSpice, measure the voltage across a 1 kΩ resistor in series with an AC source (sine wave with a frequency of 500 Hz and a peak amplitude of 3V).

Experimental Set-up:

A. Build a series circuit with a 1 kΩ resistor and AC source (sine wave with a frequency of 500 Hz and a peak amplitude of 3V). How would you measure the voltage across the resistor using a multimeter?
B. Display the voltage across the resistor using an oscilloscope.
C. Show the voltage across the resistor and the current flowing through the resistor as a function of time using a graph. How would you comment on the phase of both voltage and current through the resistor?

2. Integrator Circuit

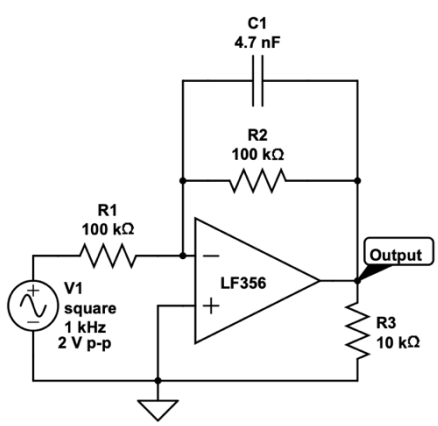

Figure 6.1

Pre-lab:

A. If a positive voltage is applied to the opamp in the figure above, what would be the output of the opamp? Explain your answer with waveforms. What happens when a negative voltage is applied?
B. What is the effect on the output of the integrator if the value of the resistor or capacitor is increased?
C. Simulate the circuit in PSpice, and present the simulation results.

Experimental Setup:

A. Wire up the circuit in figure 6.1 on a breadboard. Use a function generator to generate the square wave.
B. Display the input and output simultaneously on the oscilloscope.

3. Differentiator Circuit

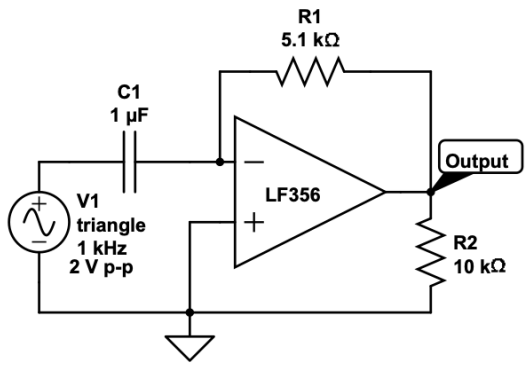

Figure 6.2

Pre-lab:

A. What happens to the output if a negative voltage is applied to the inverting input of the differentiator? Discuss the same when the input voltage is positive.
B. Compare the effect on the output of the op-amp differentiator when the voltage applied at the input changes at a slow and fast rate. Explain your answer with waveforms.
C. Simulate the circuit in PSpice, and present the results.

Experimental Setup:

A. Wire up the same circuit in figure 6.2 on a breadboard.
B. Use an oscilloscope to simultaneously display the input and output of the circuit.

Laboratory Report Guidelines

In your laboratory report, address the following:

1. **Integrator and Differentiator Circuit Behavior**
   Compare your **experimental results** for the integrator and differentiator circuits with the **theoretical predictions**. Discuss the observed **output waveforms** and **phase relationships** between input and output signals. Explain how the measured behavior confirms the expected integrating and differentiating operations.
2. **AC Analysis and Frequency Response**
   Perform an **AC analysis** of both the integrator and differentiator circuits. Identify whether each circuit behaves as a **low-pass** or **high-pass filter**. Determine the **cutoff frequencies** and explain how these frequencies can be adjusted by changing circuit parameters. Based on your current understanding, explain why these changes affect the frequency response.

Grading Rubric

Criterion	Description
Integrator Output	Clear and accurate explanation of integrator circuit behavior and results
Differentiator Output	Clear and accurate explanation of differentiator circuit behavior and results
Phase & Waveform Analysis	Insightful discussion of phase shifts and waveform changes
Writing Quality	Clear organization, proper grammar, and professional technical writing

Laboratory 7

Superposition Theorem and Source Transformation

Objectives: Verify the superposition theorem and to experimentally verify the concept of source transformation. Before starting the lab, you are required to have all the calculations and PSPICE results.

Instructional Video: https://youtu.be/1GQnS07_CR8

1. **Superposition**

   In lab:

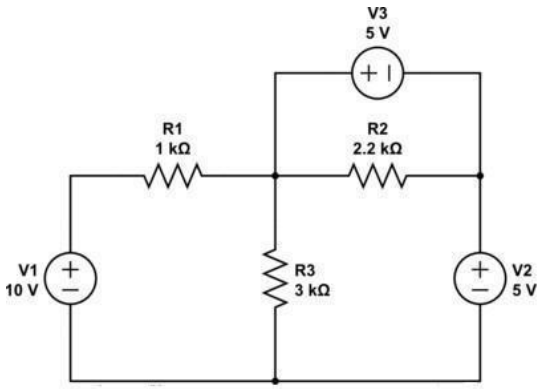

Figure 7.1

Pre-lab:

A. Replace all the voltage sources except V_1 with a short circuit and calculate the current across the resistor R_3.
B. Do the same with V2 and V3, as you know from the superposition theorem.
C. Calculate the voltage across resistor R_3.
D. Simulate the circuit in Circuitlab and present the simulation results.

Experimental Set-up:

A. Wire up the circuit in figure 7.1 on the breadboard, in the lab.
B. Using a digital multimeter, measure the voltage across resistor R_3.
C. From the theoretical and practical values, is the superposition theorem verified? How?

2. **<u>Source Transformation</u>**

In lab:

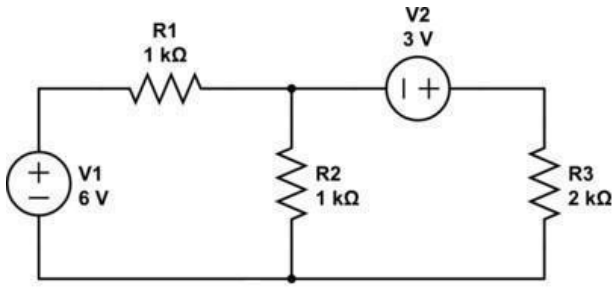

Figure 7.2

<u>Pre-lab:</u>

A. Transform the circuit in the figure into a single voltage source and then calculate the voltage and current across resistor R_3. Indicate the circuit transformation in each stage.
B. Simulate this circuit in Circuitlab, and present the measurements for voltage and current across resistor R_3.

<u>Experimental Set-up:</u>

A. Wire up the circuit in figure 7.2 on the breadboard in the lab.
B. Using a digital multimeter, measure the current and voltage across resistor R_3. Make sure you see the direction of the voltage. Try switching the red and black probes of the multimeter to see the negative/positive values of the voltage.
C. Comment on the differences between your circuit and the simulation. Would you expect the resistor tolerances (as you saw in the first lab) to have an impact on your responses?
D. How would you go about designing a "perfect" circuit like the one in figure 7.2 and guaranteeing that it would work if you only had 10% tolerance resistors? Explain this idea in English.

Laboratory Report Guidelines

In your laboratory report, address the following:

Evaluate how the principles of **superposition** and **source transformation** were verified through your experimental work. Explain how each independent source was analyzed individually and how the results were combined to predict overall circuit behavior. Discuss how **source transformations** were used to simplify the circuit analysis and compare theoretical predictions

with experimental measurements. Reflect on the challenges encountered when matching theory to experiment, and explain how **component tolerances**, **instrument accuracy**, and **measurement errors** may have contributed to any discrepancies.

Grading Rubric

Criterion	Description
Superposition	Correct and clear application of the superposition principle
Source Transformation	Clear explanation and correct use of source transformation concepts
Error Analysis	Thoughtful reflection on challenges, tolerances, and measurement limitations
Writing Quality	Well-organized, clear, and grammatically correct technical writing

Laboratory 8

Thévenin's and Norton's Theorems

Objectives: The objective of this experiment is to verify both Thevenin's and Norton's theorems. Before starting the lab, you are expected to have all calculations and PSPICE results.

Instruction Video: https://youtu.be/GH98By9EJWc

1. **Thevenin's Theorem**

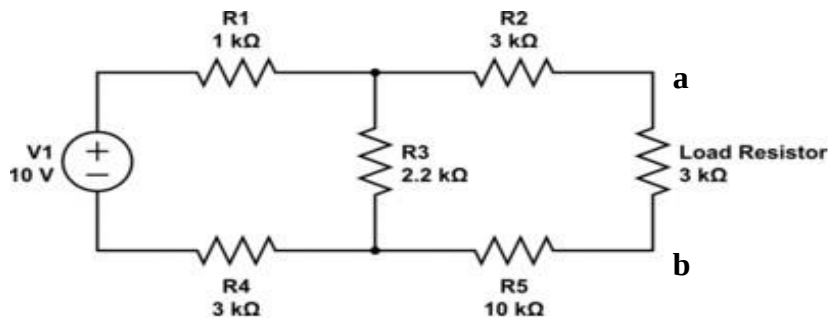

Figure 8.1

Pre-lab:

A. Find the theoretical Thevenin's voltage, V_{TH}, by finding the open-circuit voltage between terminals **a** and **b** for the circuit in figure 8.1.
B. Find the theoretical Thevenin's resistance, R_{TH}, by removing the load resistor. Also, replace the source V1 with its internal resistance (ideally, a short).
C. Draw the Thevenin's equivalent circuit with V_{TH} and R_{TH}. Then, calculate the current across the load resistor.
D. Simulate the Thevenin's circuit in Circuitlab, and present the results for current across the load resistor.

Experimental Set-up:

A. Wire up the circuit in figure 8.1 on a breadboard.
B. Measure the current across the load resistor using a digital multimeter.
C. Compare theoretical and practical values. Is Thevenin's theorem verified? How?

2. **Norton's Theorem**

Pre-lab:

A. Calculate the Norton's resistance, R_N, for the circuit in figure 8.1. How is it related to Thevenin's resistance, R_{TH}?
B. Calculate the Norton's current, I_N, for the circuit in figure 8.1.

C. Draw the Norton's equivalent, circuit and calculate the voltage across the load resistor.
D. Simulate the Norton's circuit in Circuitlab, and present the results for current across the load resistor.

Experimental Set-up:

A. Now, measure the current of the load resistor using a digital multimeter for the circuit in figure 8.1.
B. Is Norton's Theorem verified? How?
C. What is the relation between the voltage measured to the Thevenin's voltage? Explain?
D. In which real-life scenarios, Thevenin or Norton theorems can be used?

Laboratory Report Guidelines

In your laboratory report, address the following:

1. **Verification of Thevenin's and Norton's Theorems**
   Explain how your experimental results validated **Thevenin's theorem** and **Norton's theorem**. Describe the process used to obtain the equivalent circuits and compare the predicted and measured load voltages and currents. Discuss which equivalent form (Thevenin or Norton) you found more intuitive for circuit analysis and justify your preference.
2. **Maximum Power Transfer Analysis**
   Determine the value of the **load resistance** in **Figure 8.1** that results in **maximum power transfer**. Support your answer using both **hand analysis** and **circuit simulation**, and clearly demonstrate agreement between theoretical and simulated results.

Grading Rubric

Criterion	Description
Thevenin's Theorem	Correct explanation and validation of Thevenin equivalent using experimental results
Norton's Theorem	Correct explanation and validation of Norton equivalent using experimental results
Reflection & Insight	Thoughtful discussion of equivalence preference and intuitiveness
Writing Quality	Clear organization, proper grammar, and professional technical writing

Laboratory 9

RC Circuit Analysis

Objectives: The objective of this experiment is to investigate the output behavior of the RC circuit for different inputs like step response, impulse response, and a square wave. Before starting the lab, you are required to have all calculations and PSPICE results.

Instruction Video: https://youtu.be/_lJlSl48HQc

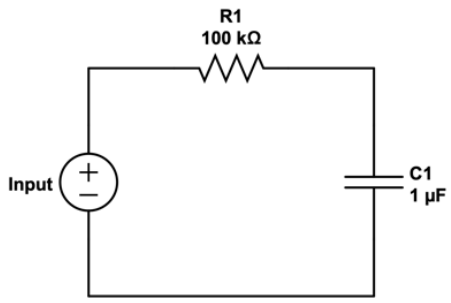

Figure 9.1

1. **RC circuit analysis using DC source**

   Experimental Set-up:
   1. Wire up the circuit in figure 9.1 on the breadboard. Use a 5 V DC source as the input.
   2. Using an oscilloscope, display the output of the circuit. Record the waveforms and explain them.
   3. Do you see exactly 5 V drop across the capacitor? Justify your answer with appropriate reasons.
   4. Measure the voltage after one time constant, τ where $\tau = R*C$, using the cursor feature of the oscilloscope. Show that the voltage after one time constant is 63.2% of the supply voltage.

2. **RC circuit analysis using AC source**

   Pre-lab:
   A. Simulate the circuit in PSpice where the voltage source is a square wave with a frequency of 100 Hz and 2V p-p amplitude.
   B. Plot the input and the voltage across the capacitor. Display two cycles of the square wave on your graph.

Experimental Set-up:

A. Wire up the circuit in figure 9.1 on a breadboard. Use the function generator as the voltage source to generate a square wave with a frequency of 10kHz and 1V p-p amplitude.
B. Why do you think the square wave is a better choice as input compared to a sine wave?
C. Using an oscilloscope, display the input and output of the circuit and record the waveforms.
D. Measure one time constant, τ, using the cursor feature of your oscilloscope. How can you verify the capacitance of your capacitor using τ and R?
E. What happens to the output waveform when you vary the value of the resistor in your circuit?
F. What are step and impulse signals? Explain using waveforms.
G. If a step signal is given as an input to the circuit in figure 9.1, what is the output? Explain your answer with waveforms.
H. If an impulse signal is given as an input to the circuit in figure 9.1, what is the output? Explain your answer with waveforms.

Laboratory Report Guidelines

In your laboratory report, address the following:

1. **Time-Domain Response of RC Circuits**
   Describe how an **RC circuit** responded to **DC, step, square-wave, and impulse inputs** in your experiments. Explain how these responses illustrate the concept of the **time constant**, and discuss the significance of the time constant in shaping transient behavior. Identify **practical applications** where such RC responses are intentionally used.
2. **Simulation of First-Order Circuits**
   Using circuit simulation software, simulate **RC, CR, RL, and LR circuits**, where the **second letter denotes the output element**. Compare the observed responses and explain how the choice of output element affects the circuit behavior.

Grading Rubric

Criterion	Description
RC Circuit Response	Accurate description of RC responses to different input signals
Time Constant	Clear and correct use of the time constant concept
Applications	Meaningful discussion of real-world applications
Writing Quality	Clear organization, proper grammar, and professional technical writing

Laboratory 10

Second-Order RLC Circuits

Objectives: The objective of this experiment is to experimentally determine the resonant frequency of the series RLC circuit and compare this with the expected resonance value. Before starting the lab, you are required to have all the PSPICE results and calculations.

Instruction Video: https://youtu.be/RLv0TfUyZ3E

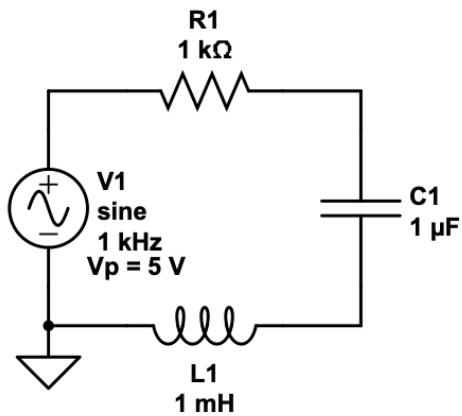

Figure 10.1

Pre-lab:

A. Calculate the resonant frequency, f_0, for the circuit in figure 10.1.

$$f_0 = \frac{1}{2\pi\sqrt{LC}}$$

B. Calculate the maximum current which flows in the circuit in figure 10.1.
C. Draw the schematic in figure 10.1 using PSpice. Use AC Sweep analysis and specify a wide range of frequencies including the resonant frequency.
D. Show graphically that at resonant frequency the voltage drop across the combination of the inductor and capacitor is minimum. Also, show that the maximum current flows at the resonant frequency.

Experimental Setup:

In lab:

A. Wire up the circuit in figure 10.1 on the breadboard in the lab. Use 100 Hz as your starting frequency.
B. Measure the voltage across the resistor on the oscilloscope.
C. Now increase the input frequency and observe the output. Explain the effect on the output across the resistor for various input frequencies including the resonant frequency.
D. Record the frequency at which the maximum amplitude is obtained.
E. Connect an ammeter in series to the circuit and measure the current when the maximum amplitude is obtained.
F. Compare items **D** and **E** with the calculated values and see whether they are as expected.
G. How would you comment on the effect of different resistor values R on the overall functioning of the circuit?

Guidelines for report:
Discuss how you identified resonance in your RLC circuit. How did the measured resonant frequency and current compare to theoretical predictions? What effect did varying resistance have on resonance sharpness?

Rubric:

- Explanation of resonance and measurement
- Comparison of experimental vs. theoretical values
- Insight into resistance effect on resonance
- Writing quality