DATE: 31 JUL 21

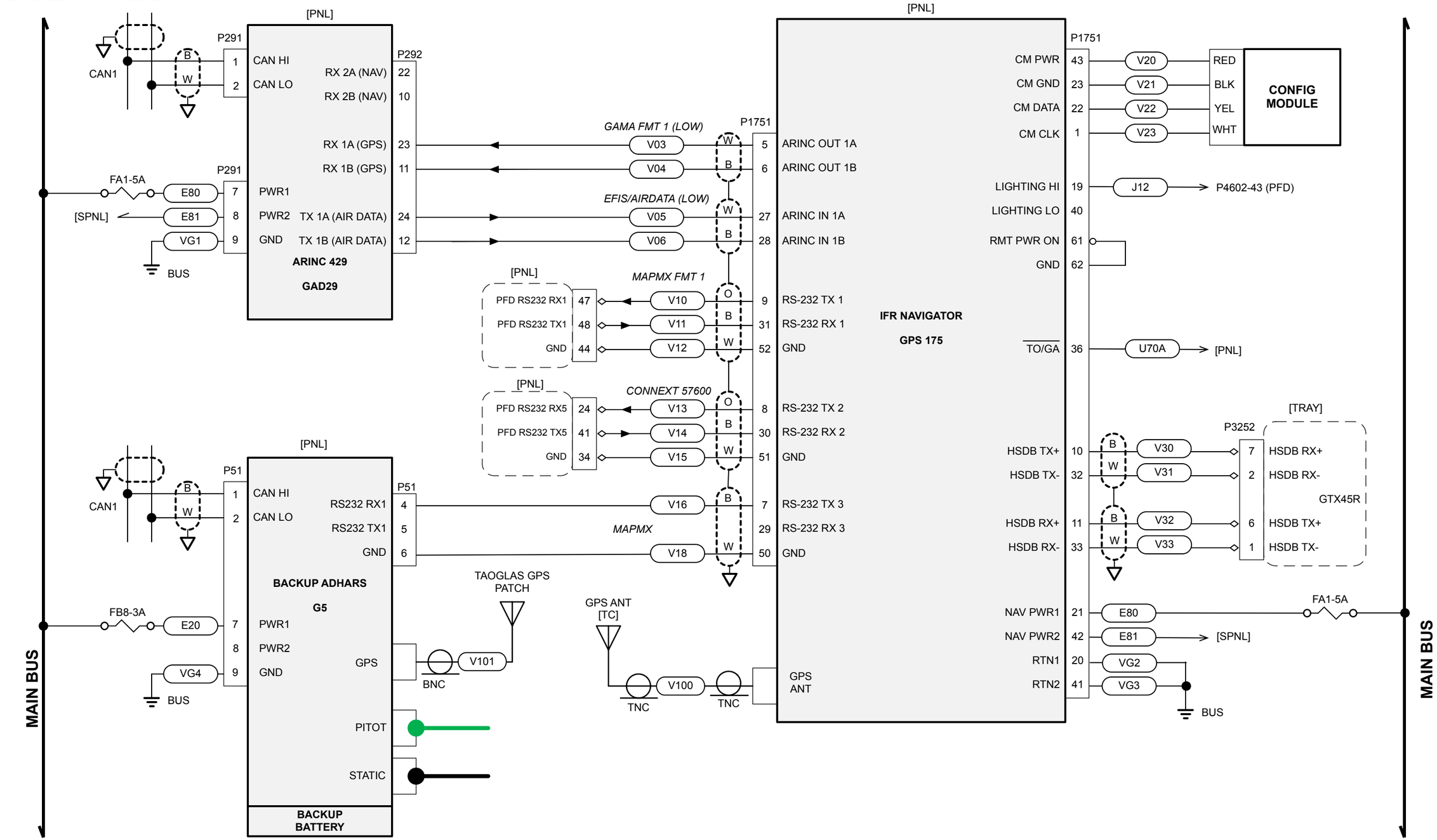

NOTES:
1) ALL WIRE 22 AWG UNLESS OTHERWISE NOTED.

FILE:	N430WB_SCHEMATIC_210515.graffle		
PAGE NAME:	V. IFR GPS175, G5		
MODIFIED:	Sat Jul 31 2021	PAGE:	23 of 24