2026 CSE402 - 기말 프로젝트

Model-Based Residual RL for Rough-Terrain Traversal of Quadruped Robots

모델 기반 보행 제어기를 보정하는 Residual 강화학습 기반 4족 보행 로봇 험로돌파

프로젝트 참여 학생 : 김도훈, 이재찬, 정범준
지도교수 : 이두석

2026.04.29

CSE402 Team 3

Abstract

Scope of This Work

This work focuses on terrain-aware residual reinforcement learning for improving model-based quadruped locomotion on rough terrain

Quadruped robots can traverse rough and unstructured environments, but stable locomotion is difficult due to irregular ground height, uncertain contact, and posture instability. This work combines a model-based gait controller with an RL-based residual policy to improve rough-terrain adaptability while preserving nominal walking stability.

- Model-based control provides stable and interpretable nominal locomotion
- Rough terrain causes performance degradation due to contact uncertainty and fixed gait heuristics
- RL learns terrain-dependent residual actions instead of learning locomotion from scratch
- The proposed framework is evaluated in simulation across diverse rough-terrain conditions

Contents

01 Purpose & Research Question

02 Key Literature Reviews

03 System Design

04 Methodology

05 Conculsion

06 Reference

01 Purpose & Research Questions

Purpose

To develop a terrain-aware model-based residual RL framework for quadruped rough-terrain traversal

Research Questions

Q1. Performance
Can residual RL improve rough-terrain traversal compared with model-based control alone?

Q2. Learning Efficiency
Does model-based gait prior make RL more stable and sample-efficient than end-to-end RL?

Q3. Adaptivity
Can terrain-aware residual weighting activate corrections only when terrain difficulty increases?

02 Key Literature Reviews

High-speed control and navigation for quadrupedal robots on complex and discrete terrain

Hyeongjun Kim, Hyunsik Oh, Jeongsoo Park, Yunho Kim, Donghoon Youm, Moonkyu Jung, Minho Lee, Jemin Hwangbo*

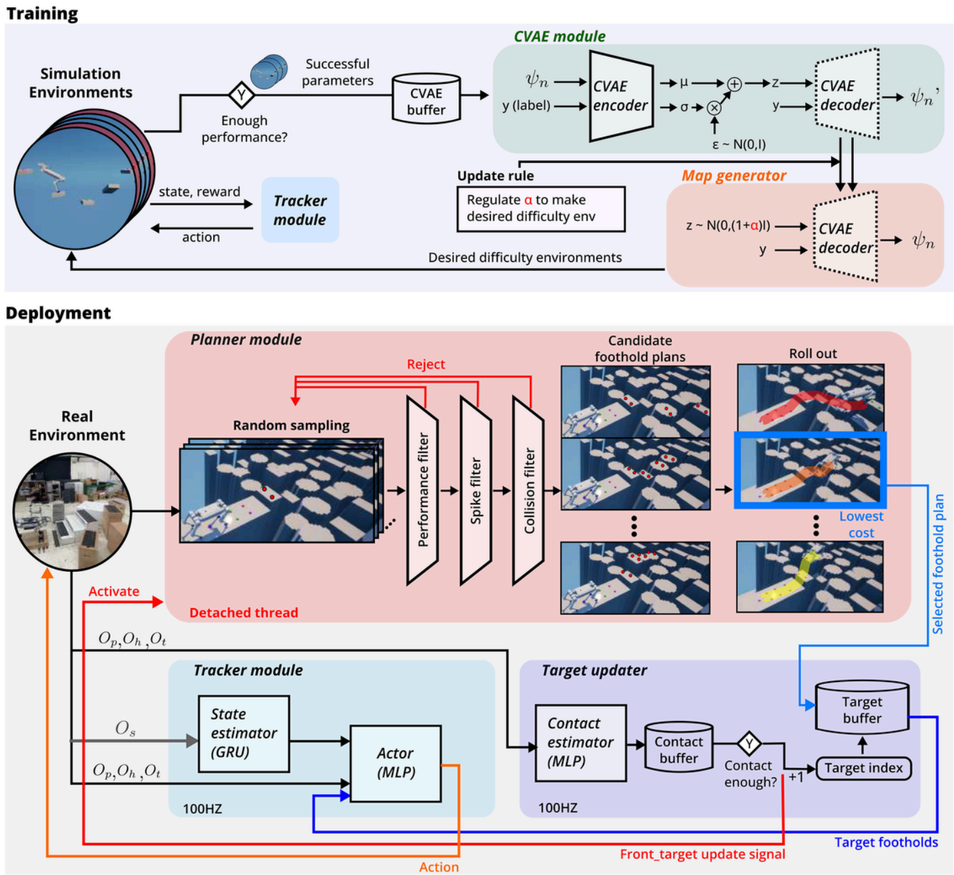

Concept

- Planner(Sampling-based) + Tracker(RL)의 hierarchical pipeline
- Map Generator learns competitively with the Tracker → Automatically adjusted curriculum difficulty

Novelty

- Generate physically feasible terrains using a CVAE-based Map Generator
- Verify the practical feasibility of the foothold plan through physics simulation rollouts

Key

- Terrain curriculum design method
- Reward structure of the Tracker
- Evaluation Method: Tracking Error, Success Rate

02 Key Literature Reviews

A Modular Residual Learning Framework to Enhance Model-Based Approach for Robust Locomotion

Min-Gyu Kim, *Graduate Student Member, IEEE*, Dongyun Kang, *Graduate Student Member, IEEE*, Hajun Kim, *Graduate Student Member, IEEE*, and Hae-Won Park, *Member, IEEE*

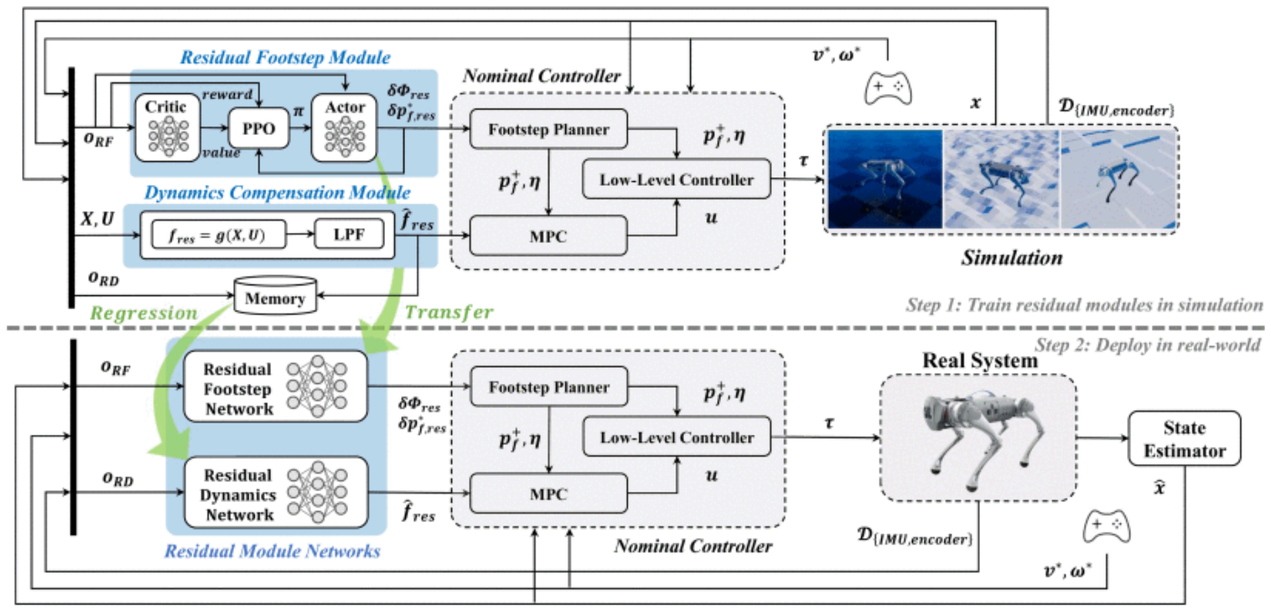

Concept

- Two residual modules compensate for MBA model mismatch
- Footstep Module (RL): adjusts landing positions
- Dynamics Module (SL): corrects dynamics errors

Novelty

- Role-separated RL + SL improves learning efficiency
- Modular design adds robustness while keeping nominal MPC

Key

- Sim-to-real pipeline for residual module transfer
- PPO-based RL for footstep correction

03 System Design

System Schematic

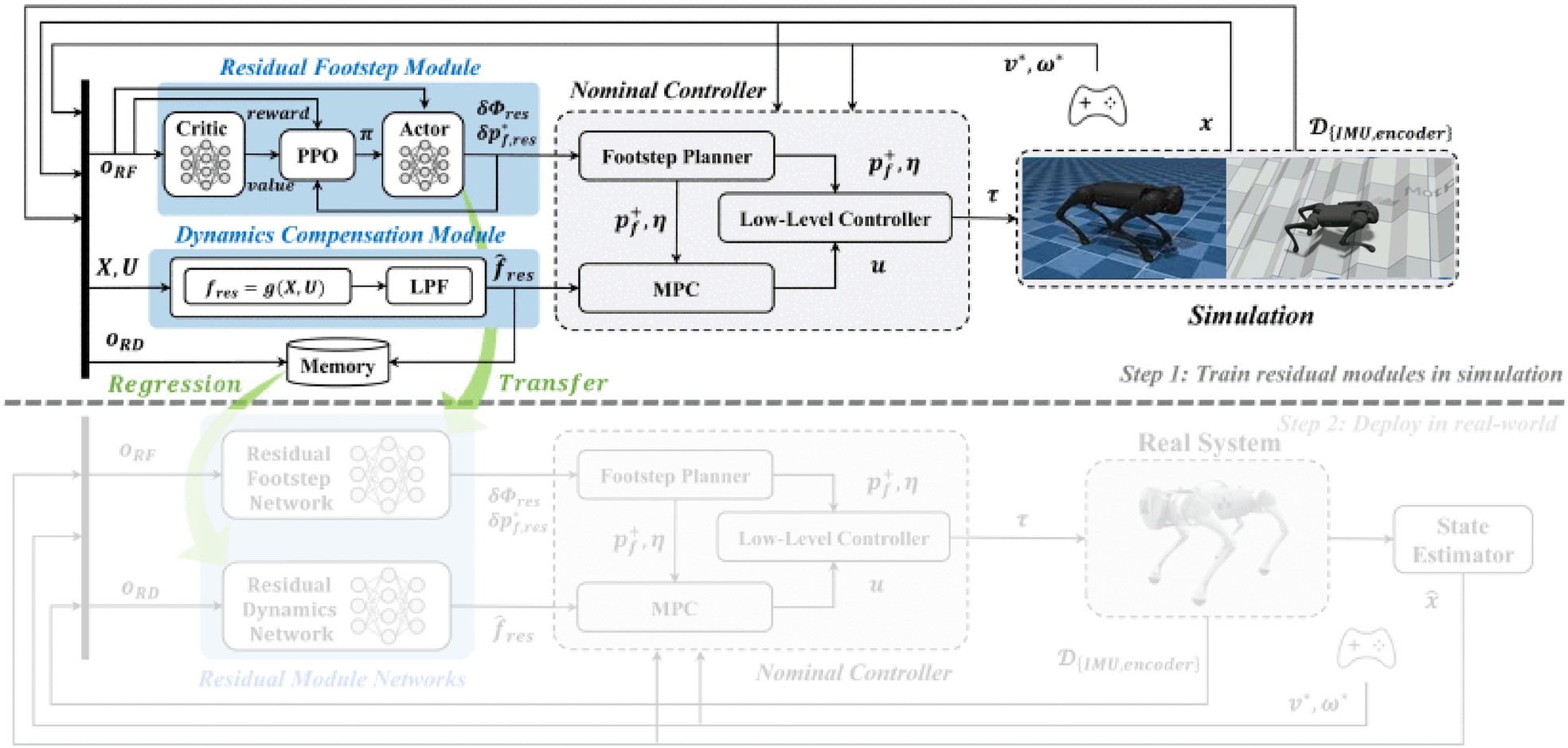

1. Model-Based Nominal Locomotion

A model-based gait controller is used to generate stable nominal quadruped locomotion.

- Provides basic walking stability
- Serves as a locomotion prior
- Reduces the learning burden of RL

2. Terrain-Aware Residual Learning

An RL policy learns residual corrections based on robot state and terrain information.

$$u = u_{MB} + \Delta u_{RL}$$

- Provides basic walking stability
- Serves as a locomotion prior
- Reduces the learning burden of RL

3. Simulation-Based Training

The residual policy is trained in simulation under various rough-terrain conditions.

- Flat terrain
- Uneven terrain
- Slopes
- Random obstacles

4. Performance Evaluation

The proposed method is compared with baseline approaches.

- Model-based control only
- End-to-end RL
- Purposed residual RL

Evaluation focuses on：

- Traversal success
- Posture stability
- Velocity tracking
- Residual usage

07 Conclusion

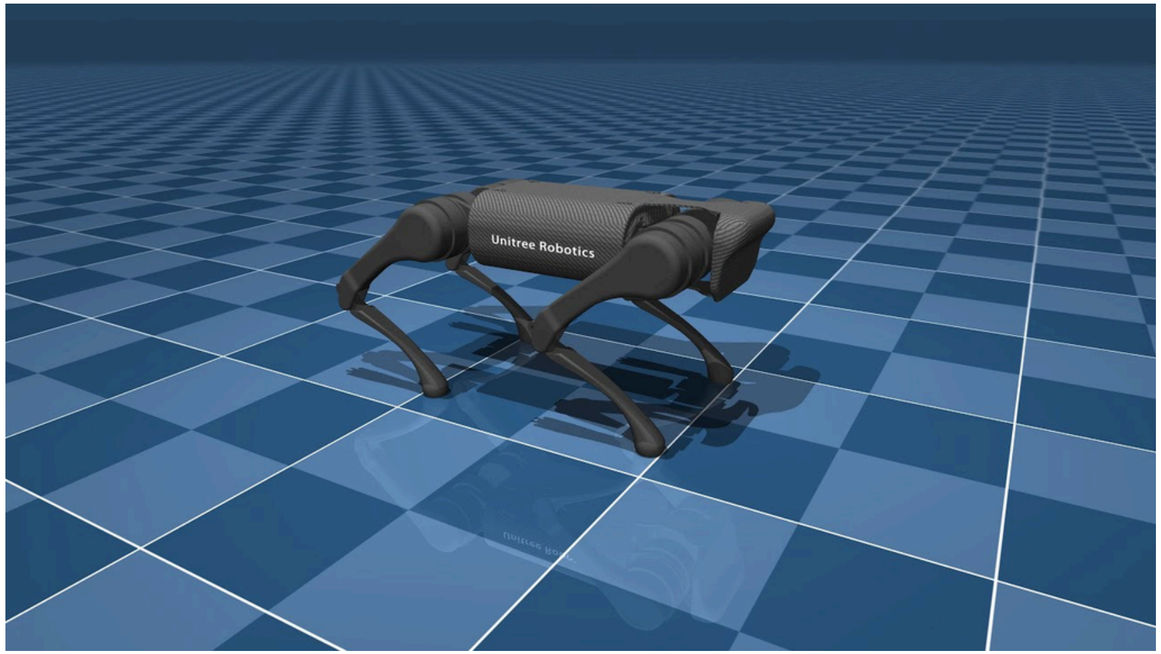

This work developed a terrain-aware model-based residual RL framework for quadruped rough-terrain traversal and validated its effectiveness through experiments.

Reference

[1] Hwangbo, J., Lee, J., Dosovitskiy, A., Bellicoso, D., Tsounis, V., Koltun, V., & Hutter, M. (2019). Learning agile and dynamic motor skills for legged robots. Science robotics, 4(26), eaau5872.

[2] Kim, H., Oh, H., Park, J., Kim, Y., Youm, D., Jung, M., ... & Hwangbo, J. (2025). High-speed control and navigation for quadrupedal robots on complex and discrete terrain. Science Robotics, 10(102), eads6192.

[3] Kim, M. G., Kang, D., Kim, H., & Park, H. W. (2025). A modular residual learning framework to enhance model-based approach for robust locomotion. IEEE Robotics and Automation Letters, 10(9), 9072-9079.

2026 CSE402

Model-Based Residual RL for Rough-Terrain Traversal of Quadruped Robots

모델 기반 보행 제어기를 보정하는 Residual 강화학습 기반 4족 보행 로봇 험로돌파

프로젝트 참여 학생 : 김도훈, 이재찬, 정범준
지도교수 : 이두석