Data-Driven Modeling and Comparative Analysis of Neural Reconstruction Methods for Simulated ERT-Based Robotic Skin

Beomjun Chung

***Abstract*— Electrical Resistance Tomography (ERT) is a promising approach for large-area tactile sensing due to its ability to estimate internal conductivity distributions using sparsely distributed boundary electrodes; however, conventional ERT image reconstruction methods suffer from ill-posed inverse problems, leading to limited spatial resolution and poor robustness to measurement noise.**

This paper presents a simulation-based study of image reconstruction methods for ERT-based tactile sensing using a unified simulation framework that generates ground truth conductivity perturbations based on Gaussian indentation models and computes voltage measurements via a finite element method.

A conventional NOSER prior-based linear reconstruction method is quantitatively evaluated under varying noise conditions in terms of localization accuracy and spatial resolution. In addition, learning-based reconstruction approaches, including a feedforward deep neural network (FFDNN) and a variational autoencoder (VAE), are investigated through qualitative reconstruction analysis.

The results show that the NOSER-based reconstruction degrades significantly as measurement noise increases, while qualitative results suggest that learning-based methods can produce sharper and more stable reconstructions. These findings highlight the potential of data-driven reconstruction frameworks for improving the reliability of ERT-based tactile sensing.

I. INTRODUCTION

Robots operating in unstructured environments require rich sensory information to safely and effectively interact with humans and surrounding objects. While vision- and audio-based sensing have been widely adopted in robotic systems, these modalities inherently suffer from limitations such as occlusion, blind spots, and the inability to directly capture physical contact. In contrast, tactile sensing enables robots to perceive direct physical interactions, which is essential for close-range human–robot interaction and manipulation tasks [1]–[3]. As contact can occur at arbitrary locations on a robot body, large-area tactile sensing has become an important research topic in robotics [4], [5].

Various approaches have been proposed to realize robotic skin and large-area tactile sensors. Many conventional tactile sensors rely on MEMS-based or array-based sensing elements, which provide high spatial resolution but are often limited to localized regions due to wiring complexity, scalability issues, and fabrication difficulty. As the sensing area increases, the number of sensing elements and electrical connections grows rapidly, making system integration and maintenance increasingly challenging. These limitations motivate the exploration of alternative sensing principles that can achieve large-area coverage with a reduced number of sensing components.

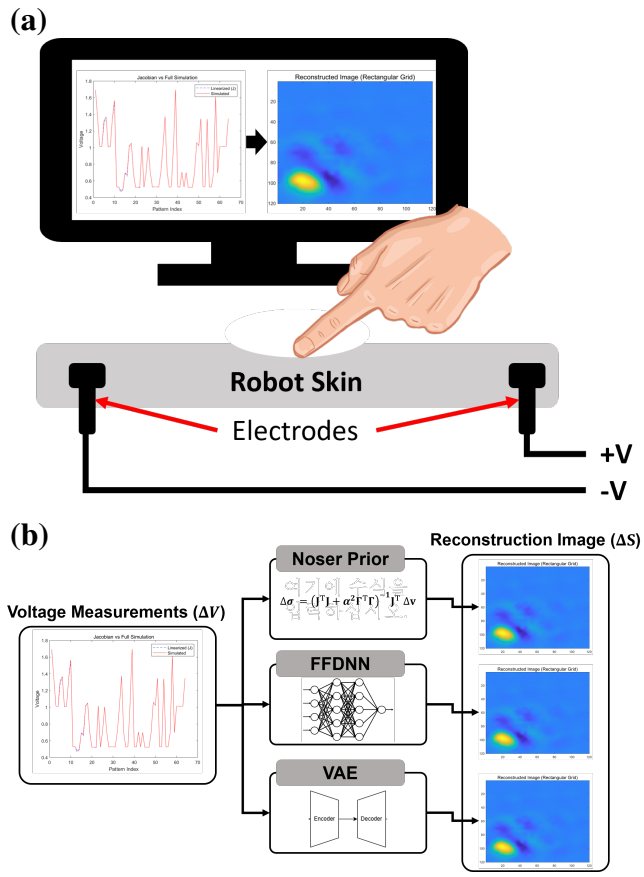

Fig. 1. Overview of ERT-based tactile sensing and image reconstruction. (a) Physical sensing principle and representative voltage and image signals. (b) Reconstruction pipelines using NOSER, FFDNN, and VAE.

Electrical Resistance Tomography (ERT) has emerged as a promising solution for large-area tactile sensing. ERT estimates the conductivity distribution of a sensing domain using boundary voltage measurements obtained from sparsely distributed electrodes. This approach allows tactile sensing over a wide area with a relatively small number of electrodes and a simple sensor structure. However, ERT-based tactile sensing suffers from an ill-posed inverse problem, and conventional linearized reconstruction methods, such as regularization-based approaches, often produce blurred images and exhibit

The author is an undergraduate student at Daegu Gyeongbuk Institute of Science and Technology (DGIST), Daegu, South Korea. (e-mail: dgist22_jbj@dgist.co.kr)

limited robustness to measurement noise. These issues degrade localization accuracy and spatial resolution, particularly under noisy measurement conditions.

To overcome these limitations, data-driven image reconstruction methods have recently attracted attention as an alternative to conventional model-based approaches. Neural networks can learn nonlinear mappings between measured voltages and conductivity distributions, potentially improving reconstruction accuracy and noise robustness. In this paper, we present a simulation-based comparative study of image reconstruction methods for ERT-based tactile sensing, including a conventional NOSER prior-based method, a feedforward deep neural network (FFDNN), and a variational autoencoder (VAE)-based approach. Using a unified simulation framework with well-defined ground truth conductivity distributions and controlled noise conditions, we evaluate the reconstruction performance of conventional and learning-based methods using a combination of quantitative metrics for the NOSER baseline and qualitative comparisons for learning-based reconstructions, focusing on localization accuracy, spatial resolution, and robustness to measurement noise. An overview of the proposed evaluation framework is illustrated in Fig. 1

II. ELECTRICAL RESISTANCE TOMOGRAPHY FOR TACTILE SENSING

Electrical Resistance Tomography (ERT) is a non-invasive imaging technique that estimates the internal conductivity distribution of a domain using electrical measurements taken at its boundary. In ERT-based tactile sensing, external contact induces local changes in the conductivity of a compliant sensing surface, which can be inferred from boundary voltage measurements obtained through sparsely distributed electrodes [6].

A. Forward Problem in ERT

Let $\Omega \subset \mathbb{R}^2$ denote the conductive sensing domain with boundary $\partial\Omega$, and let $\sigma(\mathbf{x})$ represent the spatial conductivity distribution. Under the quasi-static assumption, the electrical potential $u(\mathbf{x})$ inside the domain satisfies the following elliptic partial differential equation:

$$\nabla \cdot (\sigma(\mathbf{x})\nabla u(\mathbf{x})) = 0, \quad \mathbf{x} \in \Omega. \tag{1}$$

Current injection and voltage measurements are applied at the boundary through electrodes. Given a known conductivity distribution $\sigma(\mathbf{x})$, the forward problem consists of computing the resulting boundary voltages $\mathbf{V}$ for a prescribed current injection pattern. In practice, the forward problem is solved numerically using the finite element method (FEM).

B. Inverse Problem and Linearization

The inverse problem in ERT aims to estimate the unknown conductivity distribution $\sigma(\mathbf{x})$ from measured boundary voltages. This problem is inherently ill-posed, as small perturbations in the measurements can lead to large variations in the reconstructed conductivity.

To obtain a tractable formulation, the inverse problem is commonly linearized around a reference conductivity distribution σ_0. Let $\Delta\mathbf{V}$ denote the voltage difference between the perturbed and reference states, and let $\Delta\sigma$ represent the corresponding change in conductivity. The linearized relationship can be expressed as:

$$\Delta\mathbf{V} = \mathbf{J}\Delta\sigma, \tag{2}$$

where $\mathbf{J}$ is the Jacobian (sensitivity) matrix that describes the sensitivity of boundary voltages to conductivity changes within the domain.

C. NOSER Prior-Based Image Reconstruction

Due to the ill-posed nature of the inverse problem, regularization is required to obtain a stable solution. A widely used approach is the NOSER (Newton One-Step Error Reconstructor) prior, which estimates the conductivity change by solving the following regularized least-squares problem:

$$\Delta\hat{\sigma} = \arg\min_{\Delta\sigma} \left\{ \|\Delta\mathbf{V} - \mathbf{J}\Delta\sigma\|_2^2 + \lambda^2 \|\mathbf{R}\Delta\sigma\|_2^2 \right\}, \tag{3}$$

where λ is the regularization parameter and $\mathbf{R}$ is a diagonal matrix derived from the Jacobian, typically defined as

$$\mathbf{R} = \mathrm{diag}\left(\sqrt{\mathrm{diag}(\mathbf{J}^\top\mathbf{J})}\right). \tag{4}$$

The resulting reconstruction can be written in closed form as:

$$\Delta\hat{\sigma} = \left(\mathbf{J}^\top\mathbf{J} + \lambda^2\mathbf{R}^\top\mathbf{R}\right)^{-1}\mathbf{J}^\top\Delta\mathbf{V}. \tag{5}$$

While the NOSER prior provides a computationally efficient baseline for ERT image reconstruction, it tends to produce spatially blurred images and exhibits limited robustness to measurement noise. These limitations motivate the exploration of data-driven reconstruction methods that can capture nonlinear relationships between boundary voltage measurements and conductivity distributions [7].

III. SIMULATION FRAMEWORK AND RECONSTRUCTION METHODS

A. Forward Model and Electrode Configuration

A two-dimensional square conductive domain of size 200×200 (arbitrary units) was considered to simulate an ERT-based tactile sensing surface. A forward model was constructed using a finite element method (FEM) mesh derived from a regular 30×30 grid of nodes. A total of $N_e = 16$ electrodes were sparsely placed on the boundary of the domain, and a complete electrode model with a small contact impedance ($z_c = 10^{-5}$) was adopted.

Let $\mathbf{R}(\sigma)$ denote the transfer impedance matrix associated with a conductivity distribution $\sigma(\mathbf{x})$, and let $\mathbf{V}$ represent the boundary voltage measurements generated by a given current injection and measurement pattern. A reference (no-contact) conductivity distribution $\sigma_0(\mathbf{x})$ was defined as uniform over the domain. The corresponding reference transfer impedance matrix $\mathbf{R}_0$ and voltage vector $\mathbf{V}_0$ were computed using the FEM-based forward solver.

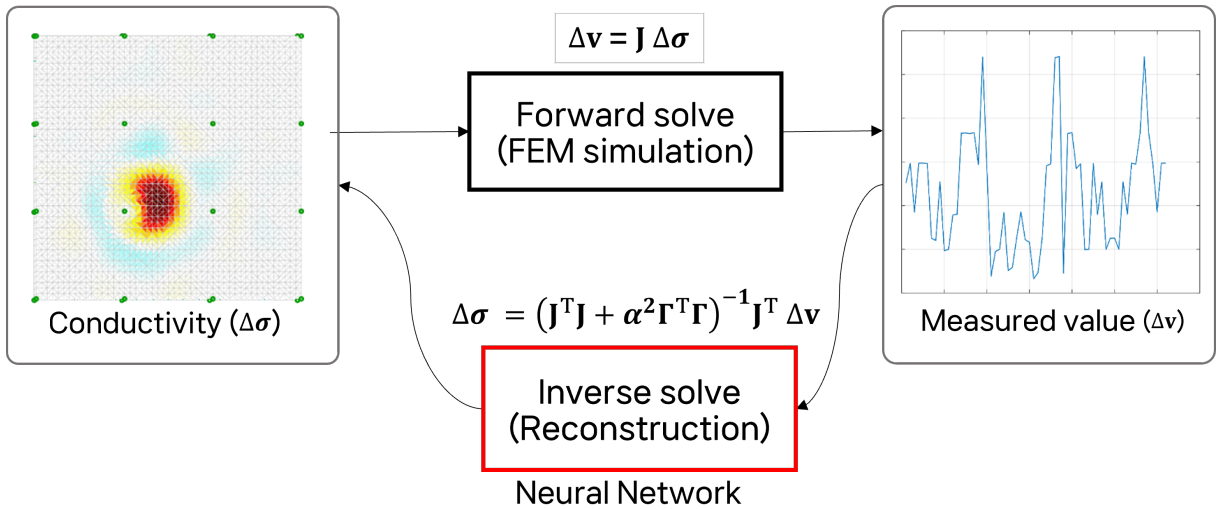

Fig. 2. Simulation pipeline for ERT-based tactile sensing. Ground truth conductivity perturbations are generated using Gaussian indentation models, boundary voltage differences are computed via a FEM-based forward solver, and reconstructed conductivity images are obtained using a conventional NOSER prior-based method.

B. Ground Truth Indentation Model

To emulate tactile indentation, localized conductivity perturbations were modeled using Gaussian fields. For each sample, the number of touches K was randomly selected from $\{1,\ldots,5\}$ using a weighted distribution to emphasize single- and double-touch cases. Each touch k was parameterized by a center location $\mathbf{p}_k = (x_k, y_k)$, an amplitude a_k, and a spatial spread σ_k. The resulting conductivity perturbation was defined as

$$\Delta\sigma(\mathbf{x}) = \sum_{k=1}^{K} a_k \exp\left(-\frac{\|\mathbf{x}-\mathbf{p}_k\|_2^2}{2\sigma_k^2}\right), \tag{6}$$

where the touch centers $\mathbf{p}_k$ were uniformly sampled over the domain, and a_k and σ_k were sampled from predefined ranges ($a_k \in [-0.7, 3.0]$, $\sigma_k \in [0.3, 10]$). The ground truth conductivity distribution was then given by $\sigma(\mathbf{x}) = \sigma_0(\mathbf{x}) + \Delta\sigma(\mathbf{x})$. The parameters $\{\mathbf{p}_k, a_k, \sigma_k\}_{k=1}^{K}$ were stored as ground truth metadata for subsequent evaluation.

C. Dataset Generation and NOSER-Based Baseline Reconstruction

An overview of the simulation-based data generation and reconstruction pipeline is illustrated in Fig. 2. For each generated sample, the perturbed transfer impedance matrix $\mathbf{R}$ was computed using the forward solver, and the corresponding boundary voltage vector $\mathbf{V}$ was obtained.

The voltage difference vector

$$\Delta\mathbf{V} = \mathbf{V} - \mathbf{V}_0, \tag{7}$$

was used as the input measurement for both conventional and learning-based reconstruction methods.

To obtain a conventional baseline reconstruction, a linear NOSER prior-based reconstruction operator was constructed. Using a precomputed Jacobian matrix $\mathbf{J}$ at the reference state and a diagonal NOSER regularization matrix $\mathbf{R}_{\text{NOSER}}$, the reconstruction matrix was defined as

$$\mathbf{M} = \left(\mathbf{J}^\top\mathbf{J} + \alpha^2\mathbf{R}_{\text{NOSER}}^\top\mathbf{R}_{\text{NOSER}}\right)^{-1}\mathbf{J}^\top, \tag{8}$$

where α denotes the regularization weight.

The reconstructed conductivity change on the FEM mesh was estimated by

$$\Delta\hat{\sigma} = \mathbf{M}\Delta\mathbf{V}. \tag{9}$$

Since learning-based models were trained on a fixed-size rectangular grid, the FEM-based reconstruction was remapped to a 30×30 grid using a precomputed mapping matrix $\mathbf{K}$:

$$\Delta\hat{\mathbf{S}} = \mathbf{K}\Delta\hat{\sigma}, \tag{10}$$

where $\Delta\hat{\mathbf{S}} \in \mathbb{R}^{30\times 30}$ denotes the reconstructed image.

Using this pipeline, a dataset of 100,000 samples was generated, consisting of paired measurements and reconstructions $\{(\Delta\mathbf{V}_i, \Delta\hat{\mathbf{S}}_i)\}_{i=1}^{N}$, along with corresponding ground truth indentation parameters.

D. Learning-Based Reconstruction Models

We considered two learning-based reconstruction strategies that map boundary voltage measurements to conductivity images. The overall architectures of the learning-based models are shown in Fig. 3.

1) Feedforward Deep Neural Network (FFDNN): The first approach directly learns a regression function from the voltage difference vector to the conductivity image:

$$\Delta\hat{\mathbf{S}} = f_\theta(\Delta\mathbf{V}), \tag{11}$$

where f_θ denotes a feedforward deep neural network parameterized by θ. The network input is the flattened

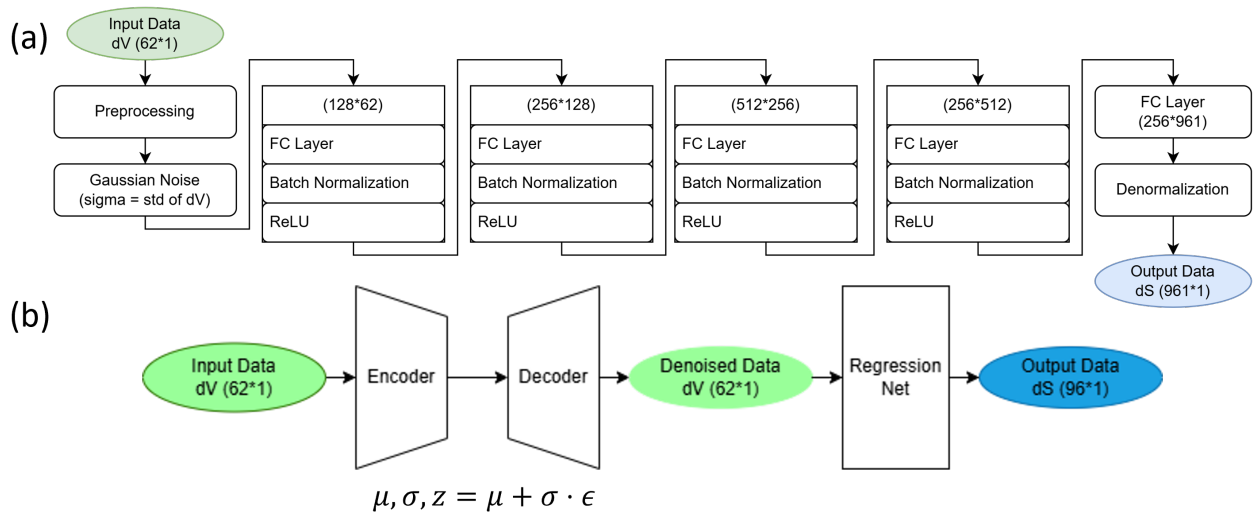

Fig. 3. Learning-based reconstruction architectures. (a) Feedforward deep neural network (FFDNN) that directly maps boundary voltage differences to conductivity images. (b) Variational autoencoder (VAE)-based reconstruction framework, where voltage measurements are encoded into a latent space and decoded to obtain denoised representations prior to image reconstruction.

voltage difference vector $\Delta\mathbf{V}$, and the output is the flattened 30×30 conductivity image.

2) Variational Autoencoder (VAE)-Based Reconstruction: The second approach employs a variational autoencoder (VAE) to obtain a structured latent representation of the voltage measurements and improve robustness to measurement noise. The encoder maps $\Delta\mathbf{V}$ to a latent distribution

$$q_\phi(\mathbf{z}|\Delta\mathbf{V}) = \mathcal{N}\left(\mu_\phi(\Delta\mathbf{V}), \mathrm{diag}(\sigma_\phi^2(\Delta\mathbf{V}))\right), \tag{12}$$

and the decoder reconstructs a denoised voltage vector $\Delta\tilde{\mathbf{V}}$ from a sampled latent code $\mathbf{z}$:

$$\Delta\tilde{\mathbf{V}} = g_\psi(\mathbf{z}), \quad \mathbf{z} \sim q_\phi(\mathbf{z}|\Delta\mathbf{V}), \tag{13}$$

where ϕ and ψ denote the encoder and decoder parameters, respectively.

The reconstructed voltage vector was then mapped to an image using a regression network:

$$\Delta\hat{\mathbf{S}} = f_\theta(\Delta\tilde{\mathbf{V}}). \tag{14}$$

The VAE was trained by minimizing the evidence lower bound (ELBO), defined as

$$\mathscr{L}_{\mathrm{VAE}} = \|\Delta\mathbf{V} - \Delta\tilde{\mathbf{V}}\|_2^2 + \beta D_{\mathrm{KL}}\left(q_\phi(\mathbf{z}|\Delta\mathbf{V}) \,\|\, \mathcal{N}(\mathbf{0}, \mathbf{I})\right), \tag{15}$$

where β controls the strength of latent regularization.

E. Evaluation Protocol Overview

All reconstruction methods were evaluated on identical test sets generated from the same ground truth indentation sampling procedure. Performance was assessed using metrics that quantify (i) localization accuracy with respect to the ground truth indentation parameters, (ii) spatial resolution, and (iii) robustness to measurement noise. Detailed metric definitions and quantitative results are presented in Section IV.

IV. SIMULATION RESULTS AND DISCUSSION

A. Evaluation Metrics

To quantitatively evaluate the reconstruction performance, two metrics were adopted: localization error and spatial resolution. Both metrics were computed with respect to the ground truth indentation parameters defined in Section III-B.

1) Localization Error: Localization accuracy was evaluated by measuring the Euclidean distance between the ground truth indentation center and the peak location of the reconstructed conductivity image. Let $\mathbf{p}_{\mathrm{GT}}$ denote the ground truth indentation center, and $\mathbf{p}_{\mathrm{rec}}$ denote the location of the maximum value in the reconstructed image $\Delta\hat{\mathbf{S}}$. The localization error was defined as

$$e_{\mathrm{loc}} = \|\mathbf{p}_{\mathrm{rec}} - \mathbf{p}_{\mathrm{GT}}\|_2. \tag{16}$$

For multi-touch cases, the minimum distance between reconstructed peaks and ground truth indentation centers was used.

2) Spatial Resolution (RES50): Spatial resolution was evaluated using the RES50 metric, which measures the effective spatial spread of the reconstructed response. RES50 was defined as the area ratio of pixels whose reconstructed conductivity values exceed 50% of the maximum value:

$$\mathrm{RES}_{50} = \frac{\left|\left\{\mathbf{x} \,\middle|\, \Delta\hat{\mathbf{S}}(\mathbf{x}) \geq 0.5 \cdot \max(\Delta\hat{\mathbf{S}})\right\}\right|}{|\Omega|}, \tag{17}$$

where Ω denotes the entire sensing domain. Lower RES50 values indicate more spatially localized and sharper reconstructions.

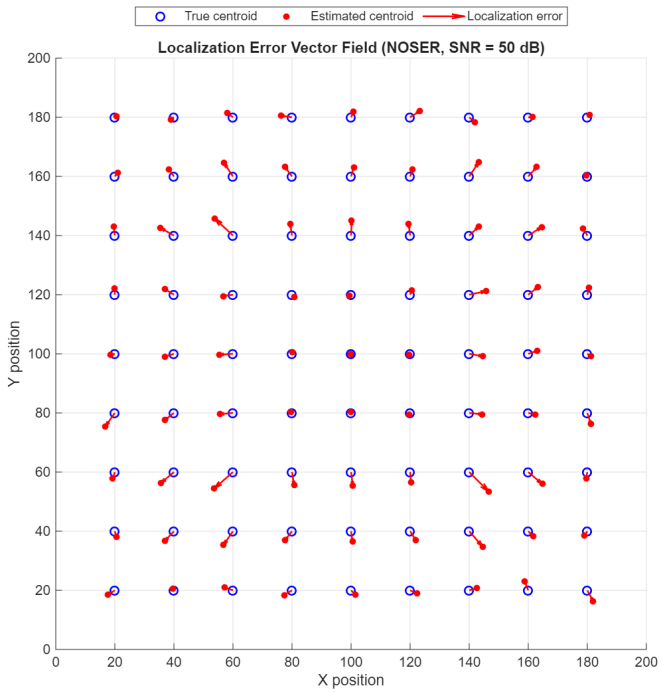

Fig. 4. Localization error vector field for the NOSER-based reconstruction at SNR = 50 dB. Blue circles indicate ground truth indentation centers, red dots indicate estimated peak locations, and arrows represent localization error vectors. This visualization is presented as a representative baseline example.

B. Baseline Localization Behavior

To provide an intuitive understanding of localization characteristics, Fig. 4 visualizes the localization error vector field obtained using the NOSER-based reconstruction at a high signal-to-noise ratio (SNR = 50 dB). This figure illustrates the displacement between the ground truth indentation centers and the estimated peak locations of the reconstructed conductivity images.

Overall, the NOSER-based method exhibits systematic localization deviations depending on indentation position. Errors tend to increase near the domain boundaries, reflecting the ill-posed nature of the inverse problem and the limited spatial sensitivity of electrode measurements. This baseline visualization serves as a reference for subsequent quantitative evaluations.

C. Robustness to Measurement Noise

To evaluate robustness against sensor noise, zero-mean Gaussian noise was added to the voltage difference vector $\Delta\mathbf{V}$ at varying signal-to-noise ratio (SNR) levels. The effect of noise on spatial resolution was analyzed using the RES50 metric.

As shown in Fig. 5, the spatial resolution of the NOSER-based reconstruction degrades significantly at low SNR levels. As noise increases, the reconstructed conductivity distribution becomes more diffuse, resulting in higher RES50

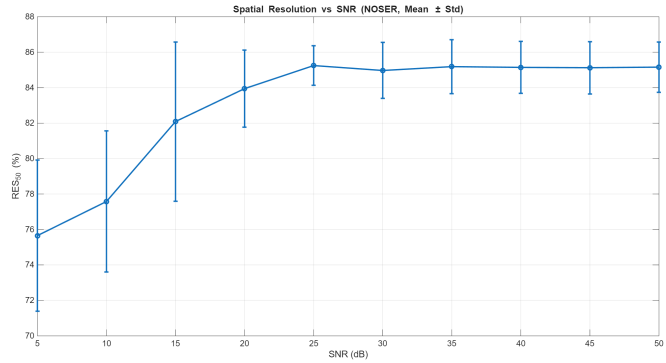

Fig. 5. Spatial resolution (RES50) versus SNR for the NOSER-based reconstruction. Mean values and standard deviations are shown. Higher RES50 values indicate increased spatial spread of the reconstructed response.

values and reduced spatial localization. Although learning-based methods are expected to provide improved robustness against measurement noise, a detailed quantitative comparison across all reconstruction models is left as future work.

D. Qualitative Comparison of Reconstructed Images

Representative reconstruction results for a single indentation case are shown in Fig. 6. This qualitative comparison highlights characteristic differences among reconstruction methods under identical indentation conditions.

The NOSER-based reconstruction produces spatially diffuse responses, particularly near electrode boundaries. The FFDNN qualitatively exhibits improved spatial sharpness by learning nonlinear mappings between voltage measurements and conductivity images. The VAE-based method tends to generate smoother and visually more consistent reconstructions, reflecting the regularizing effect of latent-space constraints.

E. Discussion

The simulation results clearly illustrate the limitations of conventional NOSER prior-based reconstruction in ERT-based tactile sensing, particularly under noisy measurement conditions. Quantitative evaluation shows that both localization accuracy and spatial resolution degrade rapidly as the signal-to-noise ratio decreases, reflecting the ill-posed nature of the inverse problem.

In contrast, qualitative reconstruction results indicate that learning-based approaches can produce sharper and more spatially consistent images compared to the NOSER baseline. The feedforward deep neural network (FFDNN) improves spatial sharpness by learning nonlinear mappings between voltage measurements and conductivity images, while the variational autoencoder (VAE) provides visually more stable reconstructions under noisy inputs due to latent-space regularization.

Although a systematic quantitative noise robustness analysis of learning-based methods was beyond the scope of this study, the observed qualitative trends suggest that data-driven reconstruction frameworks offer a promising direction for

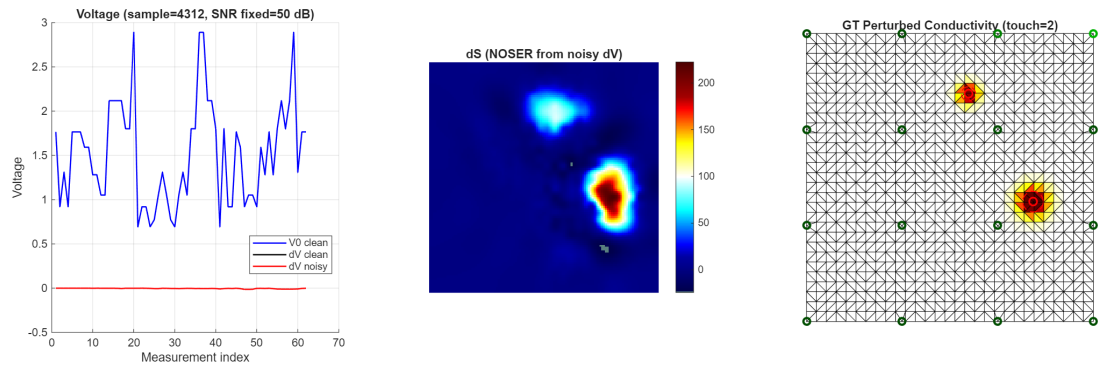

Fig. 6. Representative reconstruction results for a single indentation case. Ground truth conductivity distribution and corresponding reconstructed images are shown for the VAE-based methods. These examples are provided for qualitative comparison.

improving localization stability and spatial resolution in ERT inverse problems.

V. CONCLUSIONS

This paper presented a simulation-based study on image reconstruction methods for Electrical Resistance Tomography (ERT)-based tactile sensing, with a particular focus on the impact of reconstruction strategies under controlled noise conditions.

Rather than addressing sensor fabrication or hardware implementation, this work concentrated on the inverse reconstruction problem by constructing a unified simulation framework. Ground truth conductivity perturbations were generated using Gaussian-based indentation models, allowing systematic evaluation of localization accuracy and spatial resolution in a reproducible environment.

A conventional NOSER prior-based linear reconstruction method was quantitatively analyzed under varying signal-to-noise ratio (SNR) conditions, revealing a clear degradation in localization accuracy and spatial resolution as measurement noise increased. These results highlight the inherent sensitivity of linear inverse solvers to measurement noise in ERT-based tactile sensing.

In addition, learning-based reconstruction approaches, including a feedforward deep neural network (FFDNN) and a variational autoencoder (VAE), were investigated through qualitative reconstruction analysis. The FFDNN produced sharper and more localized reconstructions under noiseless conditions, while the VAE-based approach demonstrated visually more stable and consistent reconstructions under noisy inputs. These observations suggest that data-driven models can implicitly learn spatial priors and noise characteristics that are difficult to encode in conventional linear reconstruction frameworks.

Although quantitative noise robustness evaluation was limited to the NOSER-based reconstruction in this study, the qualitative results indicate the potential of learning-based approaches to improve reconstruction stability and spatial localization in ERT inverse problems. Future work will extend the proposed framework to include systematic quantitative evaluation of learning-based methods under varying noise levels, incorporation of experimentally measured sensor data, and exploration of hybrid model-based and data-driven reconstruction strategies for real-time tactile sensing applications.

ACKNOWLEDGMENT

This work was conducted as an undergraduate course project for MECH307 at Daegu Gyeongbuk Institute of Science and Technology (DGIST), Daegu, South Korea.

REFERENCES

[1] Q. Li, O. Kroemer, Z. Su, F. F. Veiga, M. Kaboli, and H. J. Ritter, "A review of tactile information: Perception and action through touch," *IEEE Transactions on Robotics*, vol. 36, no. 6, pp. 1619–1634, 2020.

[2] R. S. Dahiya, P. Mittendorfer, M. Valle, G. Cheng, and V. J. Lumelsky, "Directions toward effective utilization of tactile skin: A review," *IEEE Sensors Journal*, vol. 13, no. 11, pp. 4121–4138, 2013.

[3] N. Wettels, V. J. Santos, R. S. Johansson, and G. E. Loeb, "Biomimetic tactile sensor array," *Advanced robotics*, vol. 22, no. 8, pp. 829–849, 2008.

[4] K. Park, H. Yuk, M. Yang, J. Cho, H. Lee, and J. Kim, "A biomimetic elastomeric robot skin using electrical impedance and acoustic tomography for tactile sensing," *Science Robotics*, vol. 7, no. 67, p. eabm7187, 2022.

[5] J. Cho, K. Park, H. Jeong, and J. Kim, "A soft somesthetic robotic finger based on conductive working liquid and an origami structure," in *2021 IEEE/RSJ International Conference on Intelligent Robots and Systems (IROS)*. IEEE, 2021, pp. 1748–1754.

[6] D. Djajaputra, "Electrical impedance tomography: methods, history and applications," 2005.

[7] M. Cheney, D. Isaacson, J. C. Newell, S. Simske, and J. Goble, "Noser: An algorithm for solving the inverse conductivity problem," *International Journal of Imaging systems and technology*, vol. 2, no. 2, pp. 66–75, 1990.