2025 UGRP - 장영실 코스

Modeling, Verification, and Implementation of a Wheel-Legged Robot System

휠-다리 로봇 시스템의 모델링 검증 및 구현

UGRP 참여 학생 : 김도헌, 김서현, 김선우, 류운비, 정범준
UGRP 지도교수 : 박경서, 오세훈

2025.01.08

UGRP Team 31

Contents

01 Introduction

02 System Overview

03 System Design

04 System Modeling

05 Control Architecture

06 Simulation & Experiment

07 Conclusion

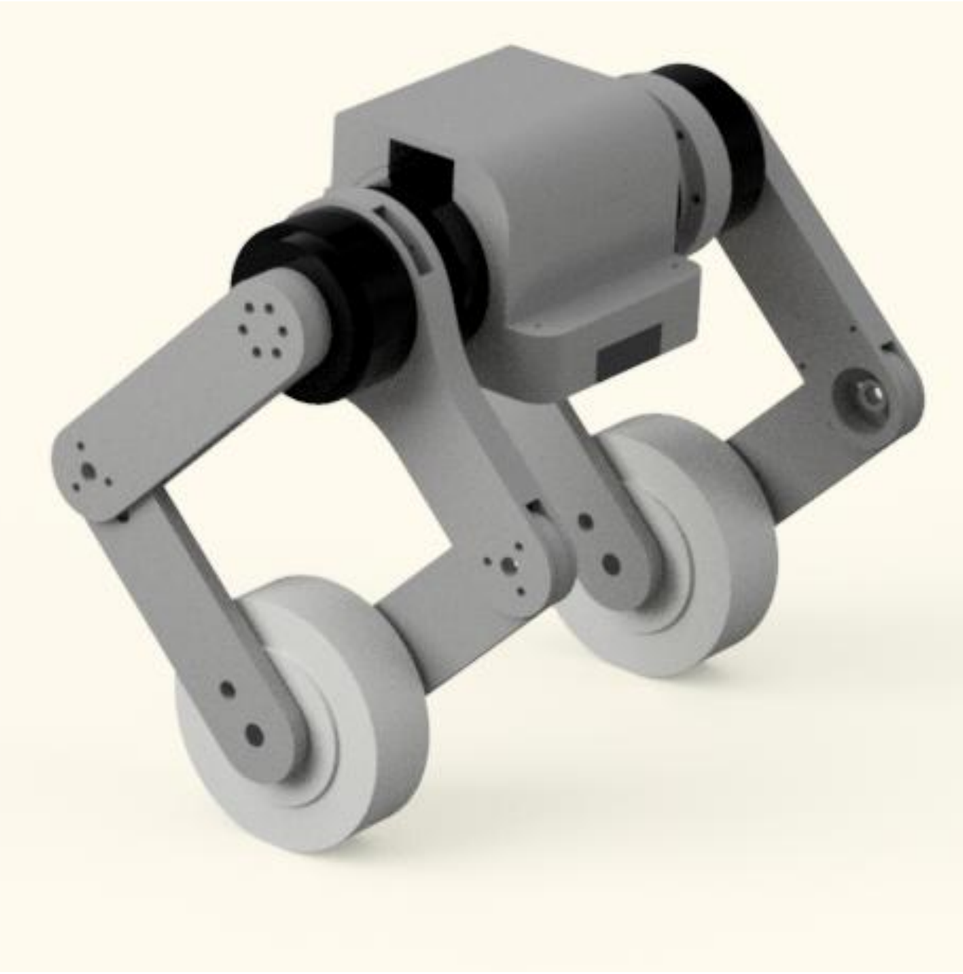

01 Introduction

Wheeled Robots

+ Efficient on flat terrain
- Limited obstacle negotiation

Legged Robots

+ High terrain adaptability
- Complex structure and control

Wheel-Legged Robots

+ Hybrid mobility: wheel + leg
+ Improved obstacle negotiation
+ Reduced complexity via mechanism design

Scope of This Work

This work focuses on single-leg analysis as the core of wheel-legged robot mobility

- The leg mechanism determines mobility and terrain adaptability
- Full-system analysis is complex at early design stages
- Single-leg modeling enables focused feasibility verification

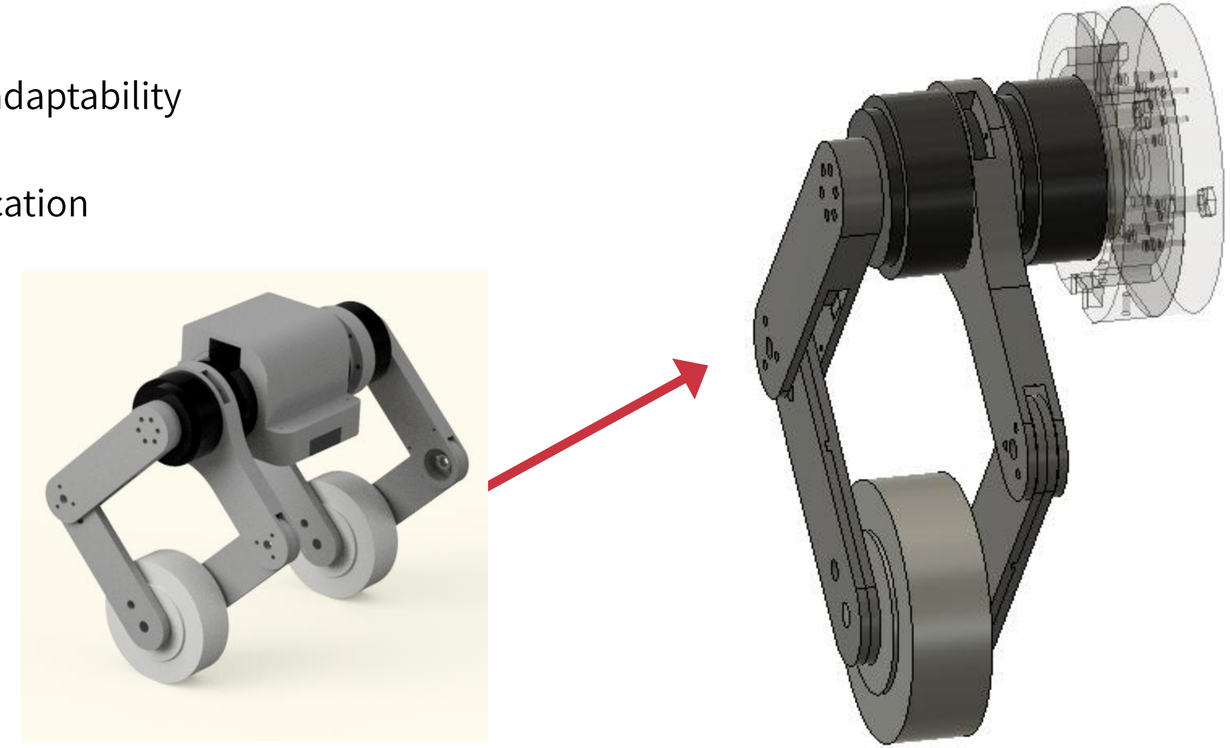

02 System Overview

Note: Specs are design targets unless marked “verified”.

Dimensions

- Linkage: 150 [mm]
- Head: 185*130*130 [mm^3]
- Height:
  - 155(Creeping)
  - 396.91(Standing) [mm]

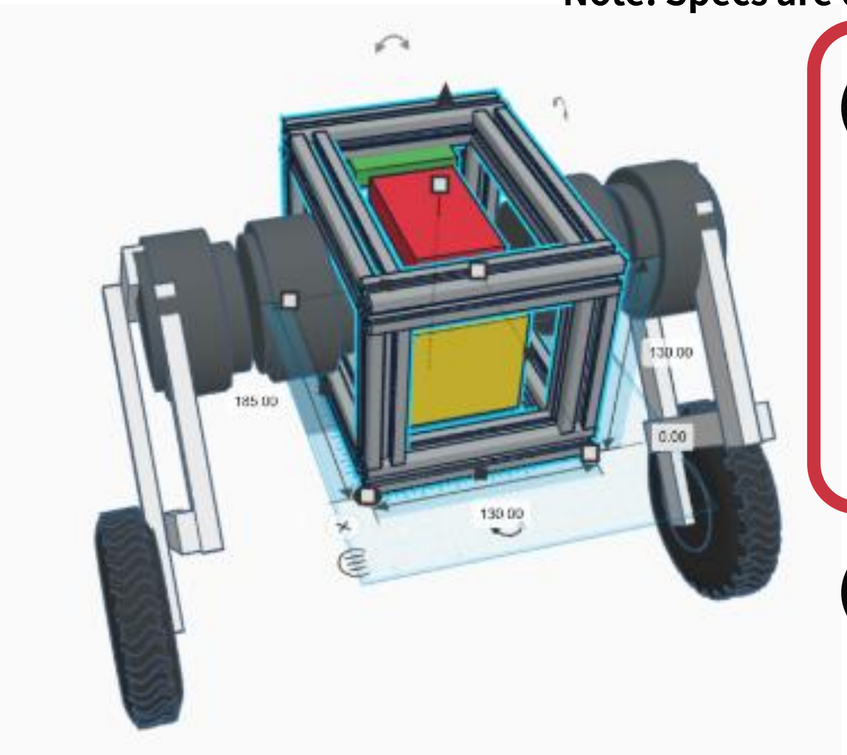

Sensing

- IMU: MPU9250
- ToF: VL53L0CX

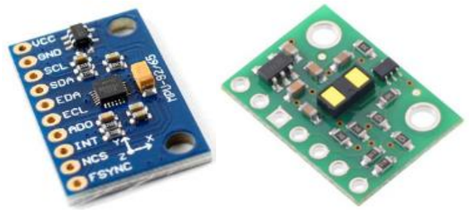

Actuation

- Hip/Knee: AK70-10 (Cubemars)
  - Peak Torque: 24.8 [N · m]
  - Rated Voltage: 24/48 [V]

Compute & Comm

- SBC (for perception): Jetson Nano
- MCU (for sensor): Teensy 4.1

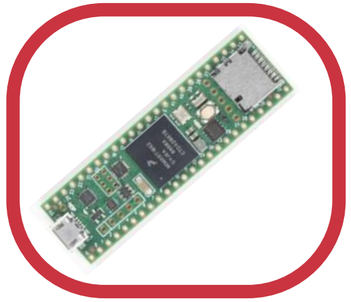

Power Architecture

- Battery: 3000 [Wh]
- 24 V / 12 V / 5 V / 3.3 V

03 System Design

Design Objectives

- Adequate Workspace
- Joint Angle Feasibility
- Mechanical Adaptability
- Modeling Compatibility
- Single-leg Validation

Design Concept & Workspace

- 4-bar Linkage
- Active vertical wheel motion
- Decoupled Body Attitude

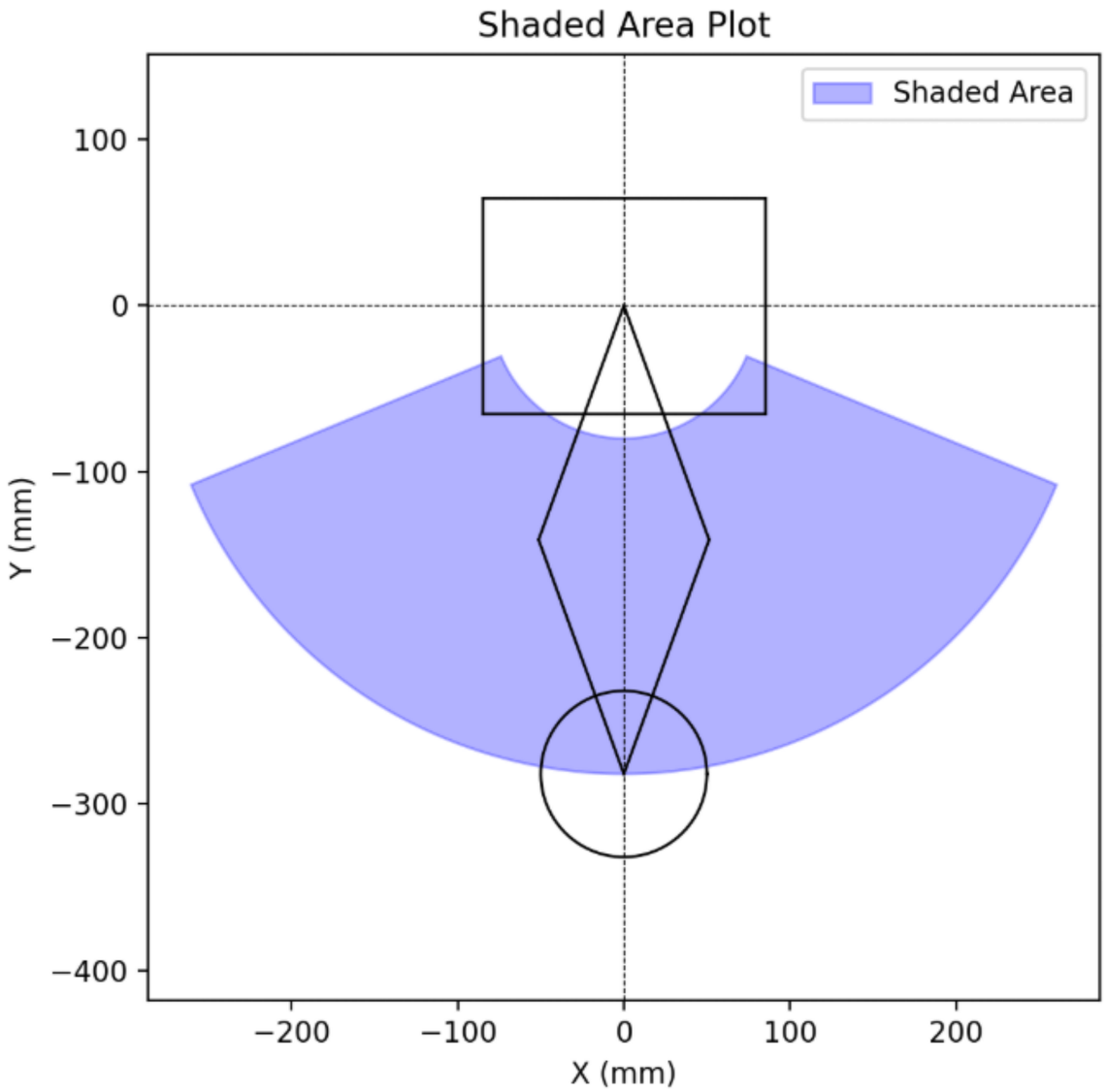

03 System Design

Design Constraints

- Limited actuator count
- Planar single-leg scope
- Early-stage feasibility focus

Electrical Architecture

- Modular power distribution
- CAN-based motor communication
- I2C sensor integration
- Separation of real-time control and high-level processing

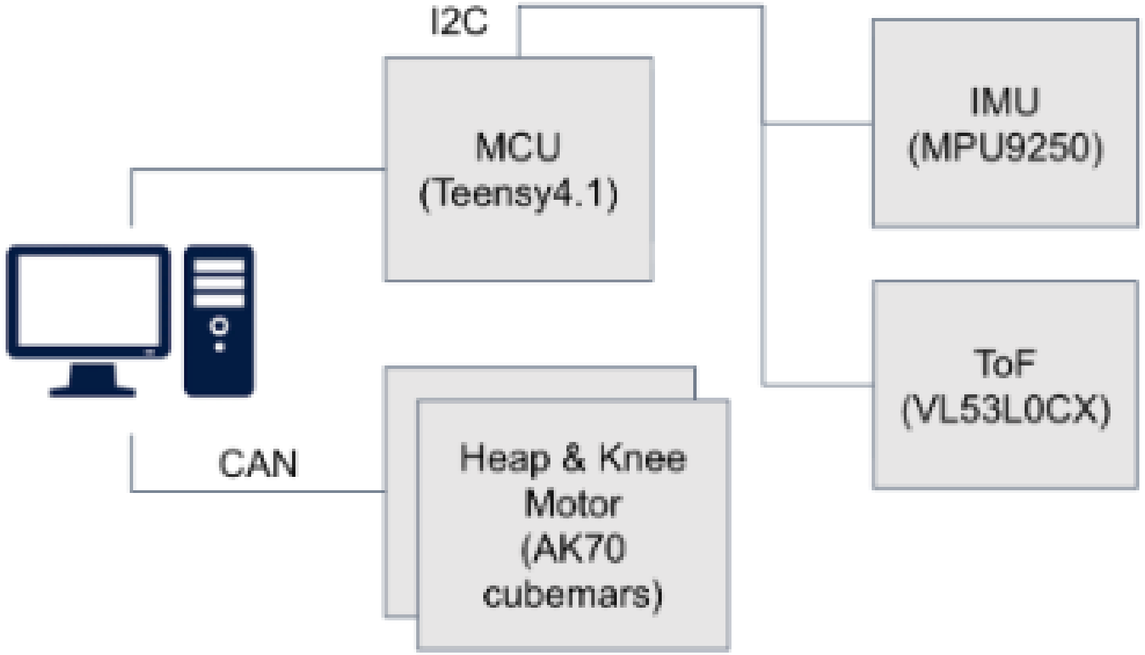

04 System Modeling

Assumptions

- Planar single-leg model (2D)
- Rigid links, ideal joints
- No wheel slip (simplified contact)
- Quasi-static / low-speed assumption (if used)

Coordinate

- Joint angles: $q = [\theta_1, \theta_2]^T$
- End-point position: $p = [x, z]^T$
- Body reference frame fixed at hip joint

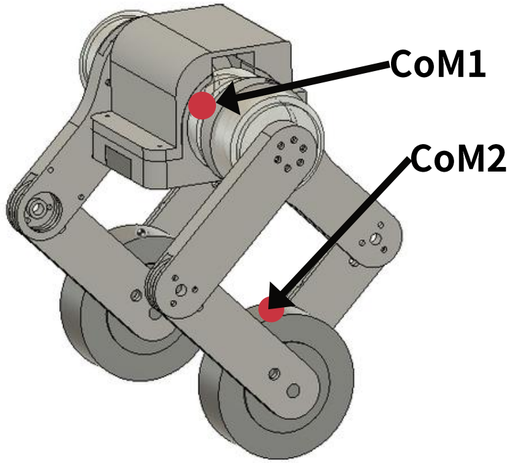

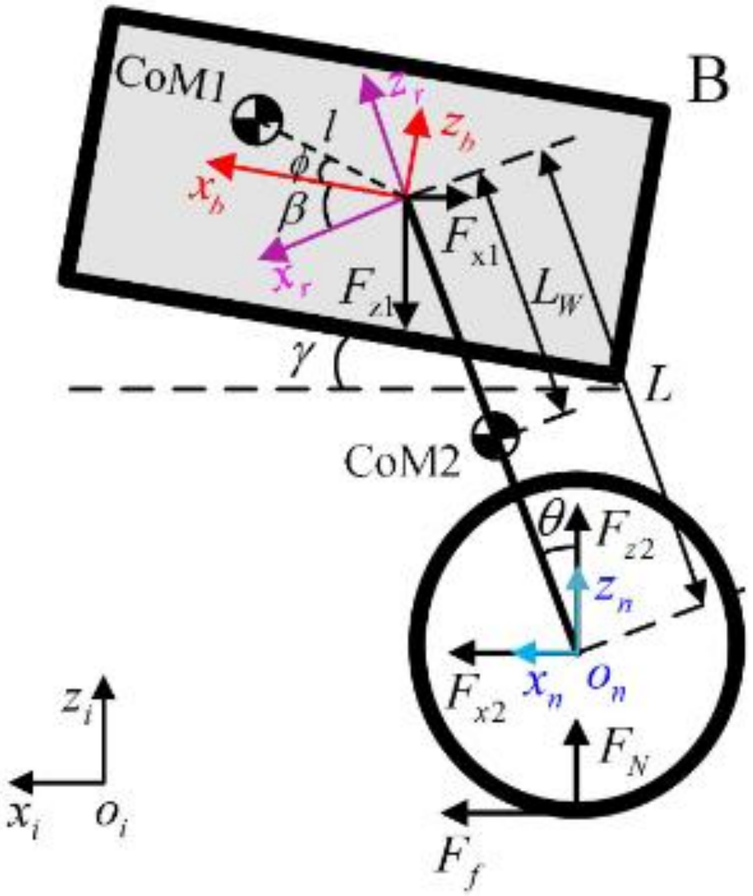

Kinematic Definition of Centers of Mass

- Head (CoM1)

$$
\begin{aligned}
{}_I x_H &= {}_I x + L sin\theta + l cos(\beta + \theta + \phi) \\
{}_I z_H &= L cos\theta + l sin(\beta + \theta + \phi)
\end{aligned}
$$

- Rod (CoM2)

$$
\begin{aligned}
{}_I x_L &= {}_I x + L_M sin\theta \\
{}_I z_L &= L_M cos\theta
\end{aligned}
$$

Wheel Dynamics & Ground Interaction

$$
\begin{aligned}
F_f &= m_w {}_I\ddot{x} + F_{x2} \\
F_N &= m_w g + F_{z2} \\
I_w \frac{{}_I\ddot{x}}{R} &= \tau_w - F_f R
\end{aligned}
$$

Rod (Leg Link) Force & Torque Balance

$$
F_{x2} = m_L \frac{d^2}{dt^2}({}_I x_L) + F_{x1}
$$

$$
F_{z2} = m_L \frac{d^2}{dt^2}({}_I z_L) + F_{z1} + m_L g
$$

$$
\begin{aligned}
I_L \ddot{\theta} = -\tau_w - \tau_H &+ (F_{z1} \sin\theta - F_{x1} \cos\theta) L_w \\
&+ (L - L_w)(F_{z2} \sin\theta - F_{x2} \cos\theta)
\end{aligned}
$$

Head (Upper Body) Dynamics

$$F_{x1} = m_H \frac{d^2}{dt^2}({}_I x_H)$$

$$F_{z1} = m_H \frac{d^2}{dt^2}({}_I z_H) + m_H g \qquad (5)$$

$$I_H(\ddot{\theta} + \ddot{\beta}) = \tau_H - F_{z1} l cos(\theta + \beta + \phi) - F_{x1} l sin(\theta + \beta + \phi)$$

Equation of Motion (Compact Form)

$$\boldsymbol{a}\ddot{\boldsymbol{q}} + \boldsymbol{b}\boldsymbol{q} = \boldsymbol{c}\boldsymbol{u}$$

$$\begin{bmatrix} \gamma \\ \theta \\ x \end{bmatrix} = \begin{bmatrix} 1 & 0 & 0 & 0 \\ 1 & 1 & \frac{1}{2} & 0 \\ R & R & R & R \end{bmatrix} \begin{bmatrix} \gamma \\ \sigma_1 \\ \sigma_2 \\ \sigma_3 \end{bmatrix}$$

$$\boldsymbol{a} = \frac{\partial \boldsymbol{f}(EoM)}{\partial \ddot{\boldsymbol{q}}}, \boldsymbol{b} = \frac{\partial \boldsymbol{f}(EoM)}{\partial \boldsymbol{q}}, \boldsymbol{c} = \begin{bmatrix} -1 & 0 \\ 0 & -1 \\ 0 & \frac{1}{r} \end{bmatrix}$$

State-Space Representation

$$\dot{\boldsymbol{X}} = \boldsymbol{A}\boldsymbol{X} + \boldsymbol{B}\boldsymbol{u}$$

$$\boldsymbol{X} = \begin{bmatrix} \gamma & \theta & {}_I x & \dot{\gamma} & \dot{\theta} & {}_I \dot{x} & \int \gamma dt & \int {}_I x dt \end{bmatrix}^T$$

$$\boldsymbol{u} = \begin{bmatrix} \tau_H & \tau_w \end{bmatrix}^T$$

$$\boldsymbol{A} = \begin{bmatrix} \mathbf{0}_{3\times3} & \boldsymbol{I}_{3\times3} & \mathbf{0}_{3\times2} \\ \boldsymbol{a}^{-1}b & \mathbf{0}_{3\times5} & \\ \begin{bmatrix} 1 & 0 & 0 \\ 0 & 0 & 1 \end{bmatrix} & \mathbf{0}_{3\times5} & \end{bmatrix}, \boldsymbol{B} = \begin{bmatrix} \mathbf{0}_{3\times2} \\ \boldsymbol{a}^{-1}\boldsymbol{c} \\ \mathbf{0}_{2\times2} \end{bmatrix}$$

05 Control Architecture

Control Overview

- High-level stabilization (LQR)
- Low-level compliant torque control (Impedance)
- Disturbance rejection (Push test)

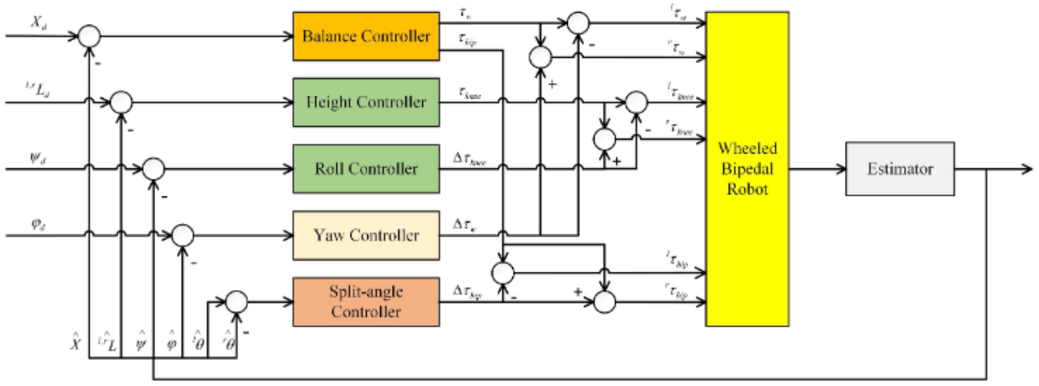

LQR Control

- Linearized around upright equilibrium
- High-level posture stabilization

$$u = K(X_d - X)$$

$$X_d = \begin{bmatrix} \gamma_d & 0 & {}_I x_d & 0 & 0 & 0 & 0 & 0 \end{bmatrix}^T$$

Impedance Control

- Low-level compliant torque control
- External force disturbance rejection
- Interaction compliance during push test

$$\boldsymbol{\tau} = \mathbf{K}_p(\mathbf{q}_d - \mathbf{q}) + \mathbf{K}_d(\dot{\mathbf{q}}_d - \dot{\mathbf{q}}) + \mathbf{g}(\mathbf{q})$$

06 Simulation & Experiment

Simulation Setup

- Planar single-leg model (2D)
- Rigid links and ideal joints
- Simplified ground contact (no slip)

2D Simulation Results

- Reachable workspace confirms feasible leg motion
- Joint angles remain bounded
- Body angle converges to upright posture

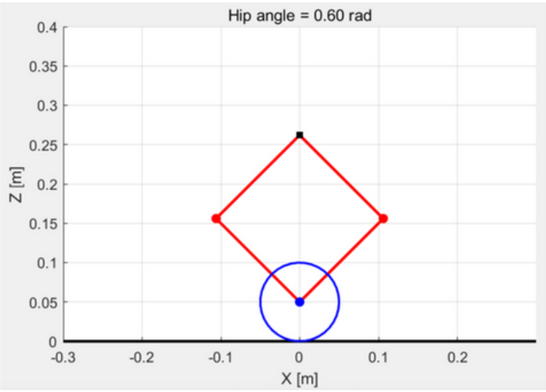

2D Simulation Results (Time Responses)

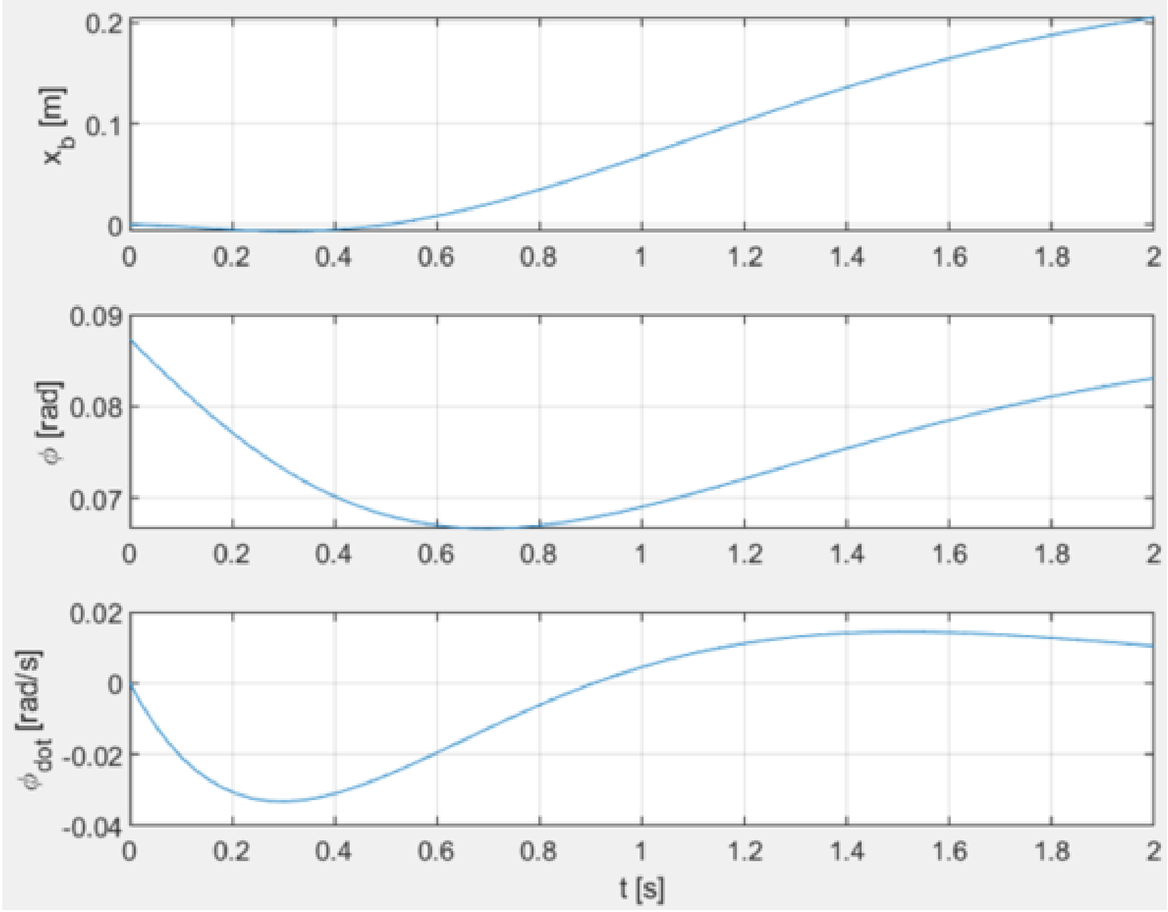

Sensor-based State Estimation (IMU + ToF) & Motor Control Demo

- Real-time sensor feedback enabled closed-loop motor control

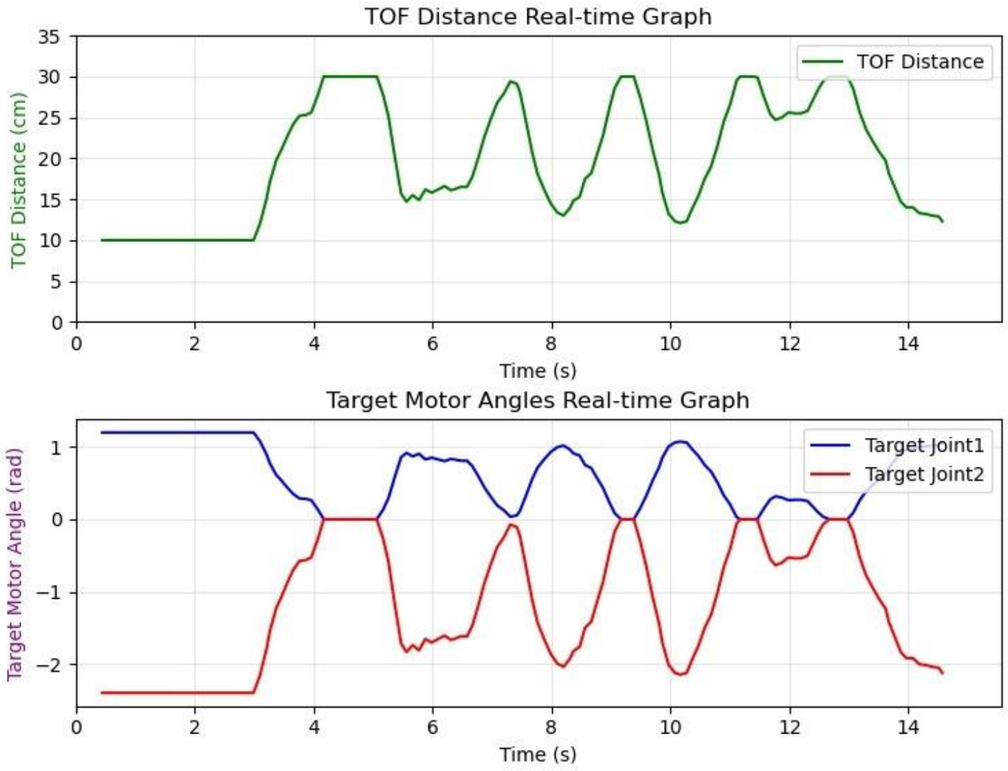

Impedance Control Push Test

Actuator-level Impedance Control

- Impedance control applied to a single actuator
- Manual external force applied to the motor
- Compliant torque response observed

System-level Impedance Control

- Impedance control applied to single-leg system
- Initial standing posture fixed
- Posture deviation remained bounded under disturbance
- Recovered to standing posture after force release

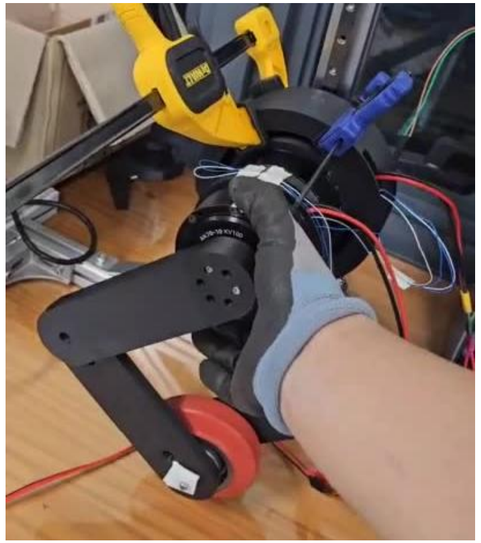

07 Conclusion

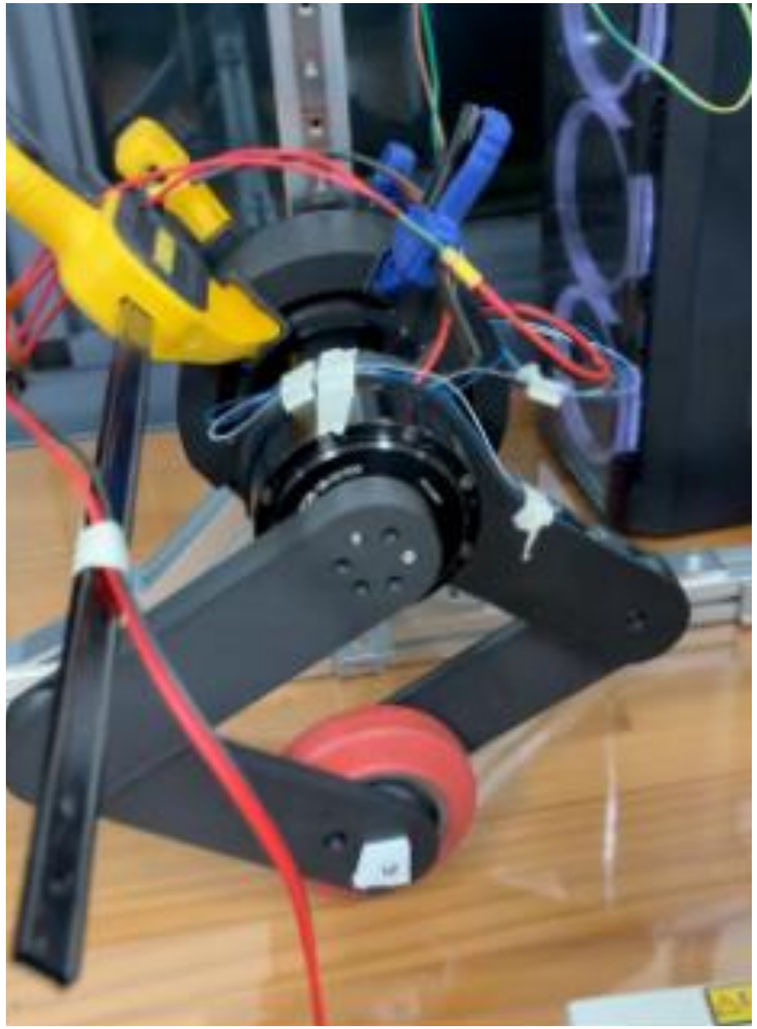

This work proposed a wheel-legged robot system and verified the feasibility of its leg mechanism through modeling and single-leg experiments.

Summary of Findings

- The leg mechanism was identified as the core component of mobility
- Kinematic and dynamic feasibility were validated through modeling
- Single-leg experiments confirmed basic structural and control validity

Limitations & Contribution

- Limitation: Full-system integration and 3D locomotion were not addressed
- Contribution: A design and modeling foundation for wheel-legged robots

Reference

[1] M. Tranzatto, T. Miki, M. Dharmadhikari, L. Bernreiter, M. Kulkarni, F. Mascarich, O. Andersson, S. Khattak, M. Hutter, R. Siegwart, and K. Alexis, “Cerberus in the darpa subterranean challenge,” Science Robotics, May 2022.

[2] C. Zheng and K. Lee, “Wheeler: Wheel-leg reconfigurable mechanism with passive gears for mobile robot applications,” in 2019 International Conference on Robotics and Automation (ICRA), May 2019.

[3] Liu, D., Yang, F., Liao, X., & Lyu, X. (2024, October). Diablo: A 6-dof wheeled bipedal robot composed entirely of direct-drive joints. In 2024 IEEE/RSJ International Conference on Intelligent Robots and Systems (IROS) (pp. 3605-3612). IEEE.

[4] M. Bjelonic, R. Grandia, M. Geilinger, O. Harley, V. Medeiros, V. Pajovic, E. Jelavic, S. Coros, and M. Hutter, “Offline motion libraries and online mpc for advanced mobility skills.”

[5] M. Bjelonic, R. Grandia, O. Harley, C. Galliard, S. Zimmermann, and M. Hutter, “Whole-body mpc and online gait sequence generation for wheeled-legged robots,” in Proc. of the IEEE/RSJ Intl. Conf. on Intell. Robots and Syst., Sep 2021.

[6] V. Klemm, A. Morra, C. Salzmann, F. Tschopp, K. Bodie, L. Gulich, N. Kung, D. Mannhart, C. Pfister, M. Vierneisel, F. Weber, R. Deuber, and R. Siegwart, “Ascento: A two-wheeled jumping robot,” in Proc. of the IEEE Intl. Conf. on Robot. and Autom., May 2019.

2025 UGRP

Modeling, Verification and implementation of a Wheel-Legged Robot System

휠-다리 로봇 시스템의 모델링 검증 및 구현

대표 참여 학생: 정범준
Email : dgist22_jbj@dgist.ac.kr

UGRP 참여 학생 : 김도헌, 김서현, 김선우, 류운비, 정범준
UGRP 지도교수 : 박경서, 오세훈