1. a) b) (6) (8)

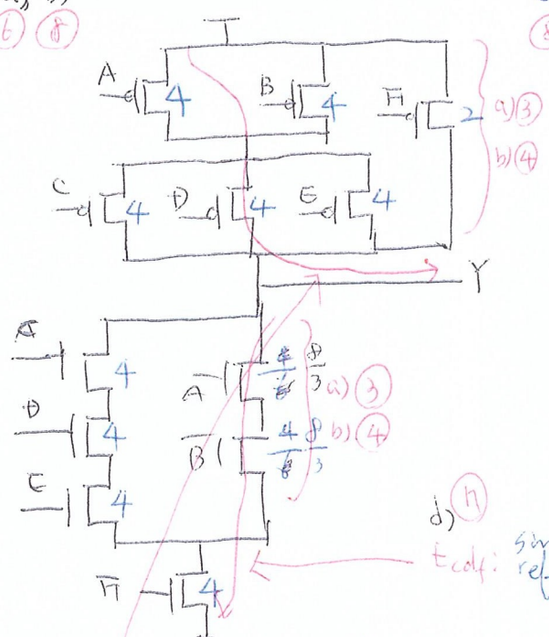

d) stick diagram (8)

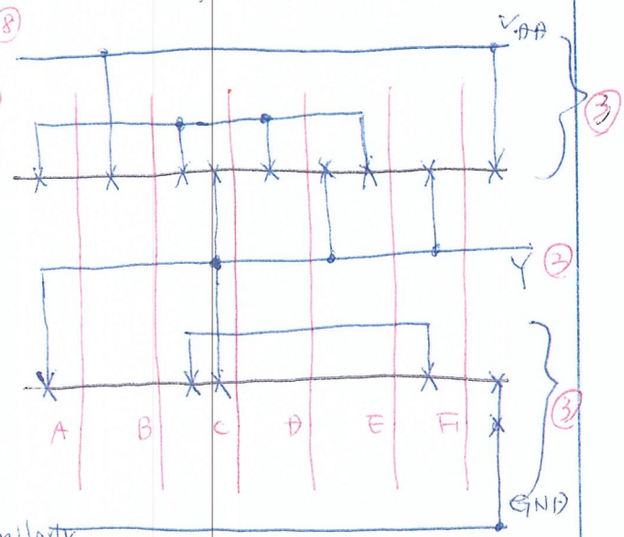

d) (4) similarly refer to c)

e) (4) t_{pdr} :

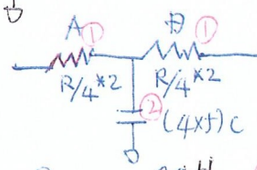

$= \frac{2}{4}R \times 20C + \frac{2R}{4} \times 2 \times (16+\frac{4}{6})C$

$= RC(26+\frac{1}{3}) = (26+\frac{1}{3})$ ps

f) (6) $G_A = (4+\frac{8}{6})/3 = \frac{20}{9}$, $G_H = \frac{6}{3} = 2$.

f) (5) $p = (16+\frac{8}{6})/3 = \frac{56}{9}$

2. a) (20) (8)

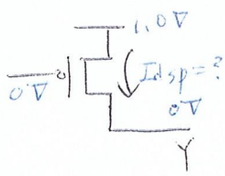

mode : $V_{ds} < V_{gs} - V_{tp}$ → Saturation (3)

(-1.0 < -1.1 - (-0.3))

no body effect (1)

$\Rightarrow I_{dsp} = \frac{1}{2}\beta_p (V_{gs}-V_{tp})^2(1+\lambda V_{ds}) =$ (2)

(β_p: ~~1.0~~ 1.0 mA/V², λ: 0.02, V_{ds}: -1.0)

b) (12)

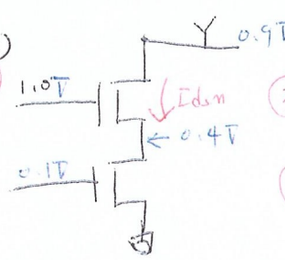

(3) mode : $V_{ds} > V_{gs} - V_{tn}$ → Saturation

(0.5 > 0.6 - 0.3)

(4) body effect : $V_t = V_{to} + \gamma(\sqrt{|\phi_s| + V_{SB}} - \sqrt{|\phi_s|}) = 0.37$V

(V_{to}: 0.3, γ: 0.4, $|\phi_s|$: 0.6, V_{SB}: 0.3)

$\Rightarrow I_{dsn} = \frac{1}{2}\beta_n (V_{gs}-V_{tn})(1+\lambda V_{ds}) =$

(β_n: 1.0 mA/V², λ: 0.02, V_{ds}: 0.5)

(2) (3)

3. (15)

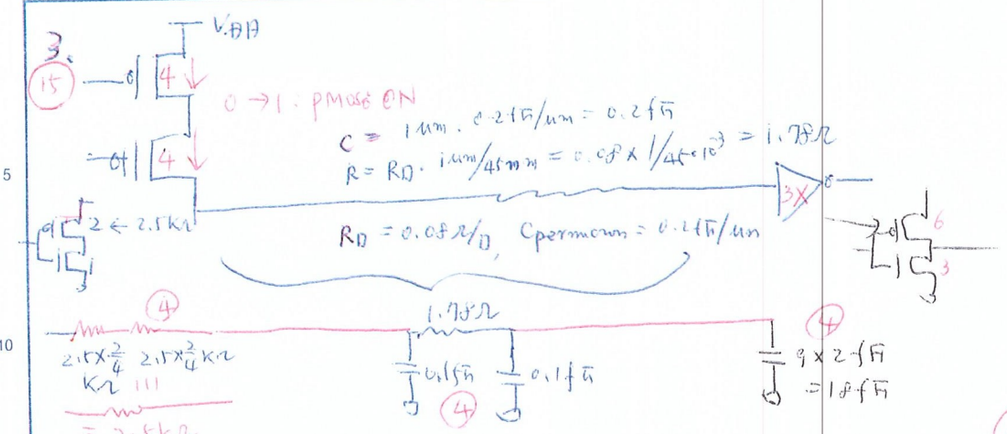

$t_{pdr} = \underbrace{2.5k\Omega \cdot 0.1fF}_{0.25\,ps} + \underbrace{(2.5k\Omega + 1.78\Omega)\cdot(18fF + 0.1fF)}_{42.282\,ps} = 42.282468\,ps$ (3)

4. (1) FALSE, μ is decrased due to the scattering of Vth
(2) TRUE, every Transistor has voltage difference between the gate and input
(3) TRUE, NBTI → Vt ↑ ⇒ leakage ↓
(4) FALSE, high-k material → tox ↑ ⇒ gate leakge ↓
(5) TRUE, P = IV, I ↑ ⇒ Fast corner
(6) FALSE, $G_{4\,2input\,NAND} = \frac{6}{3}$ $G_{3\,2input\,NOR} = \frac{7}{3}$
(7) TRUE, Band-to-band tunneling between the halo and body

(2) (2)