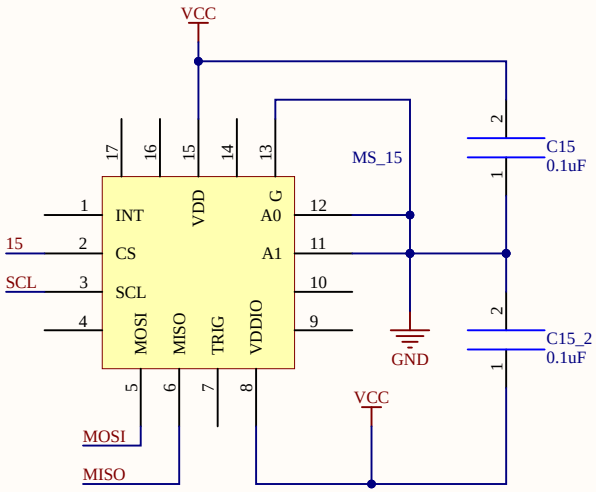

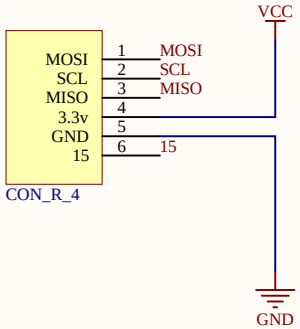

Title		
Size A4	Number	Revision
Date: 10/08/2023		Sheet of
File: C:\Users\..\Left_2_SchDoc.SchDoc		Drawn By:

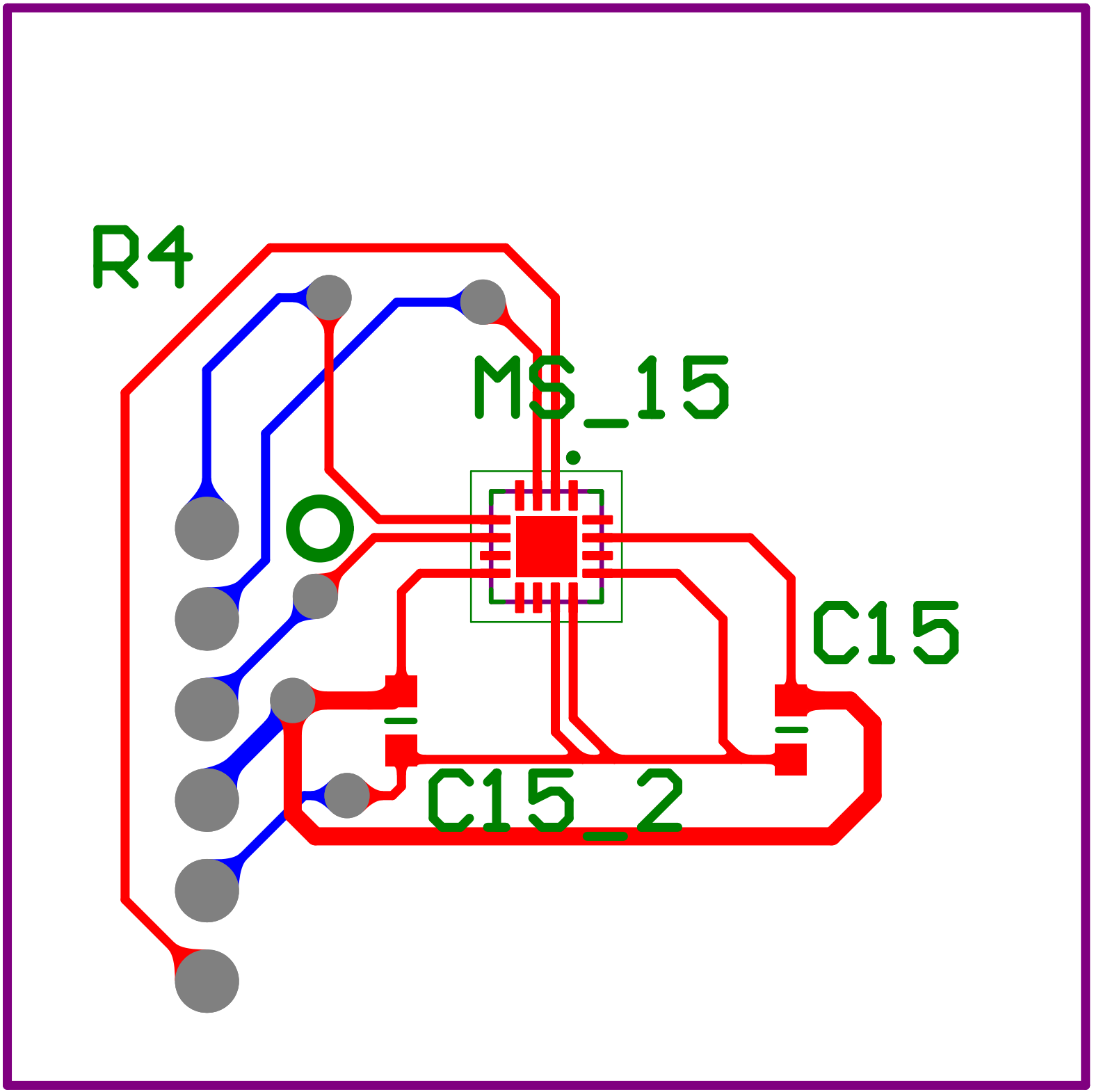
R4
MS_15
C15
C15_2