# wheeler_base

Completed assembly

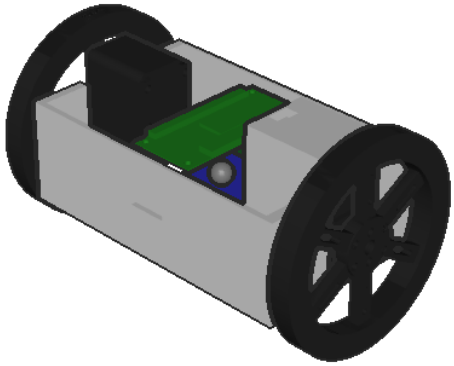

# Step 1

battery

1a. Insert battery into pocket

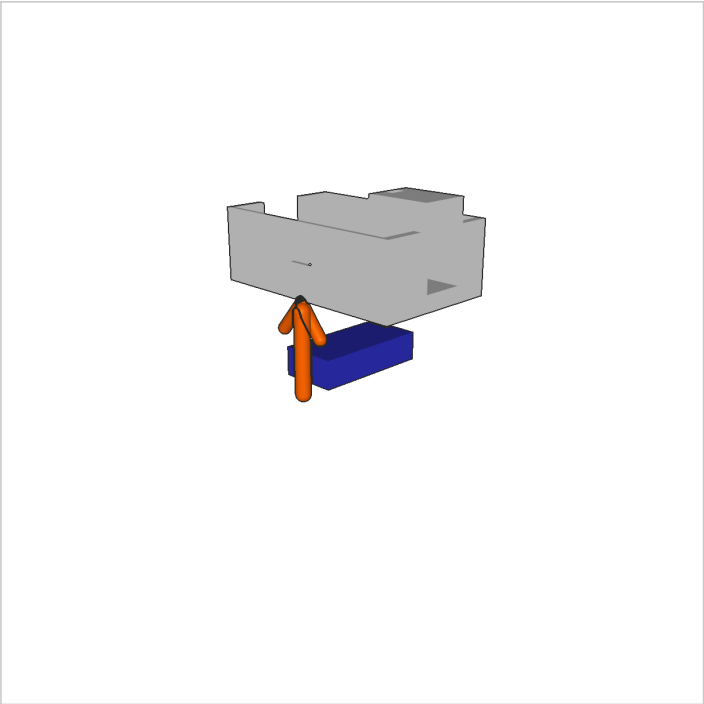

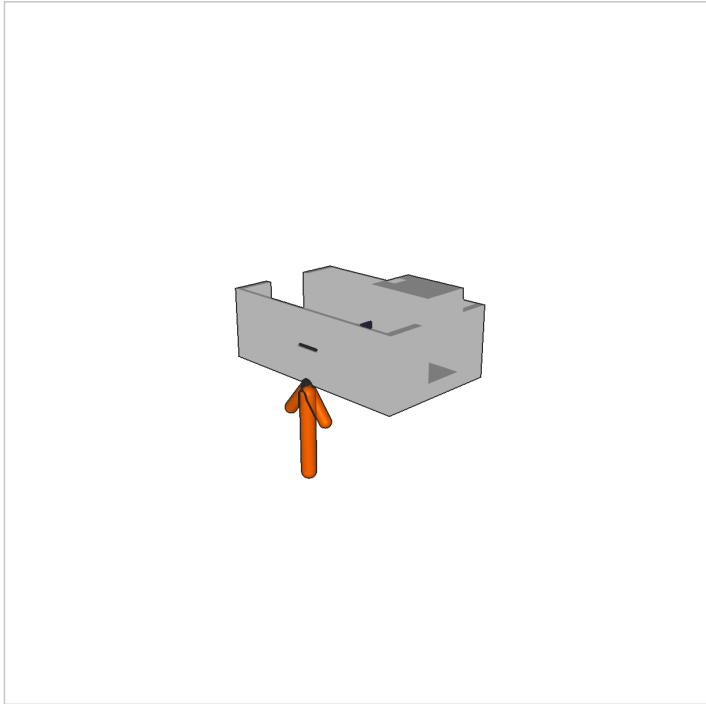

1b. Seat component

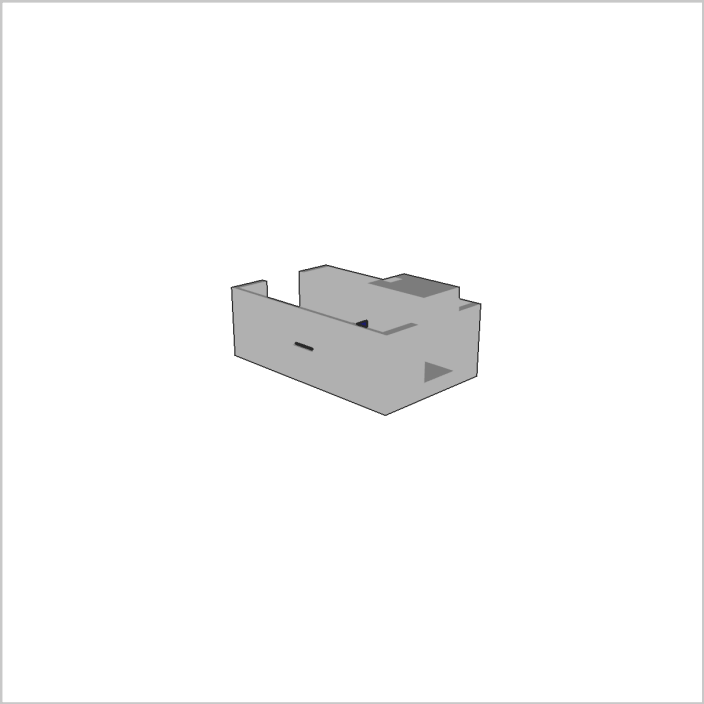

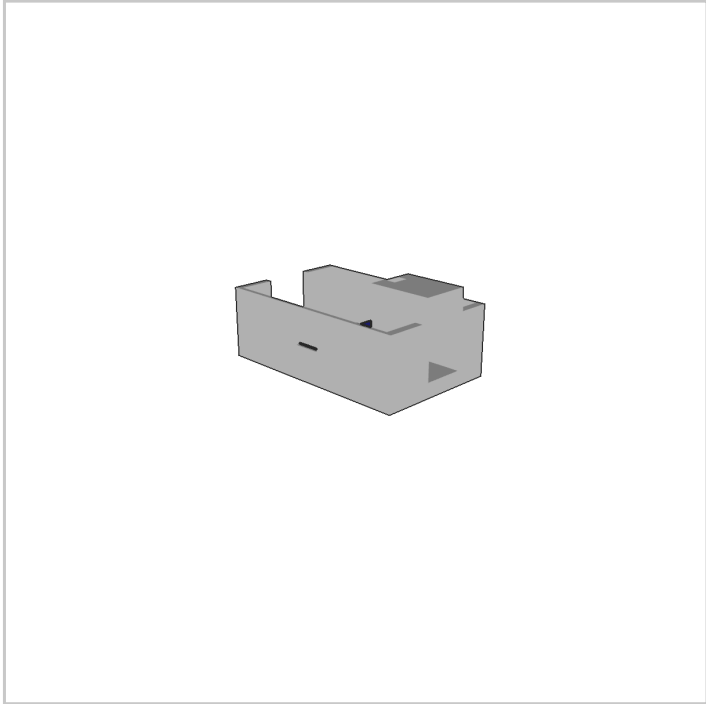

# Step 2

camera

2a. Insert camera into pocket

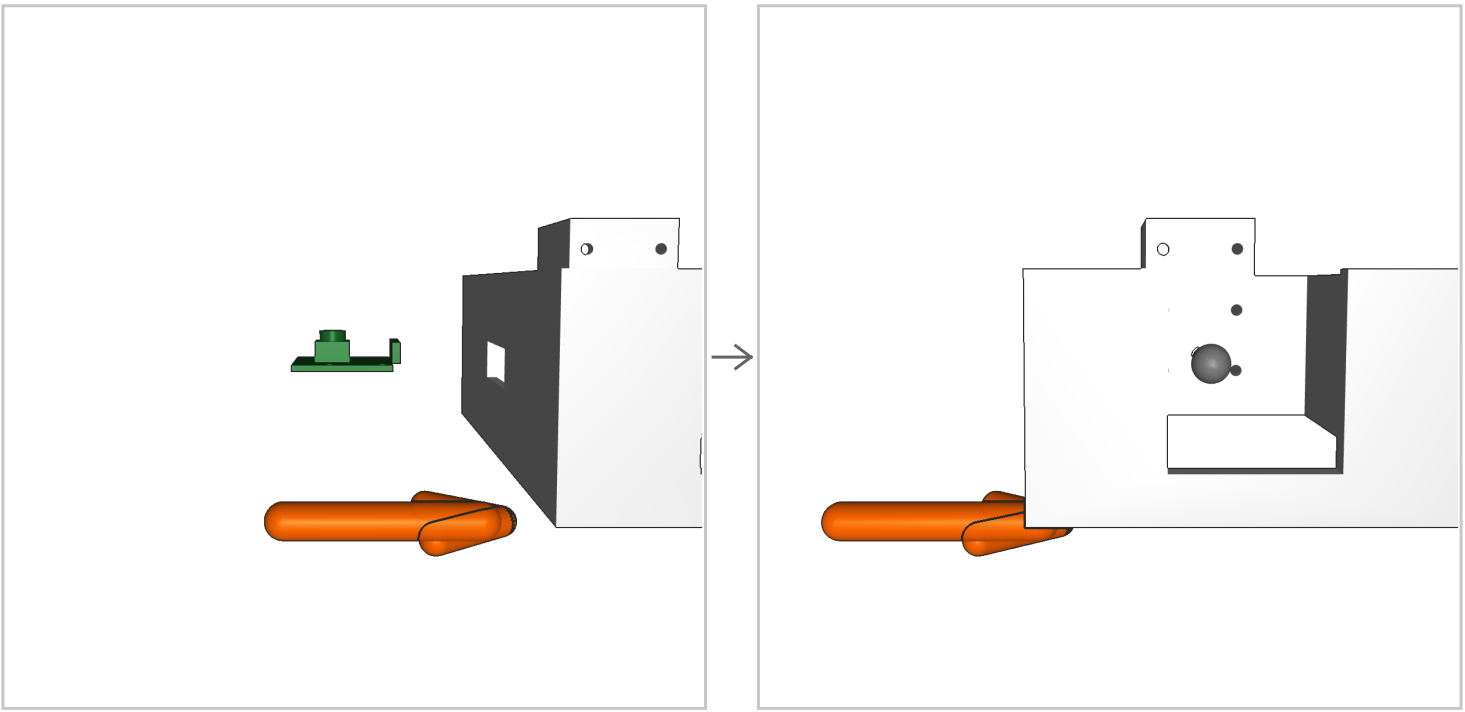

2b. Fasten with screws

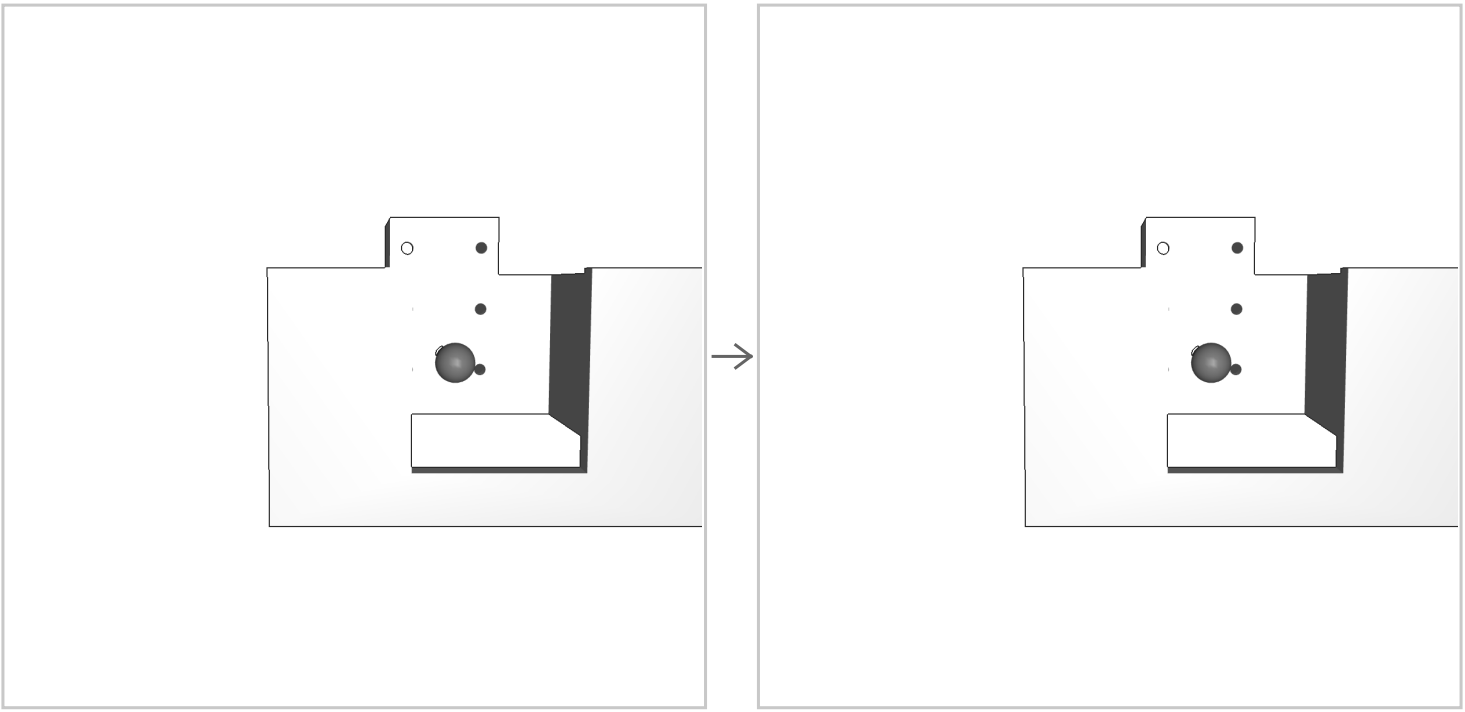

# Step 3

pi

3a. Insert pi into pocket

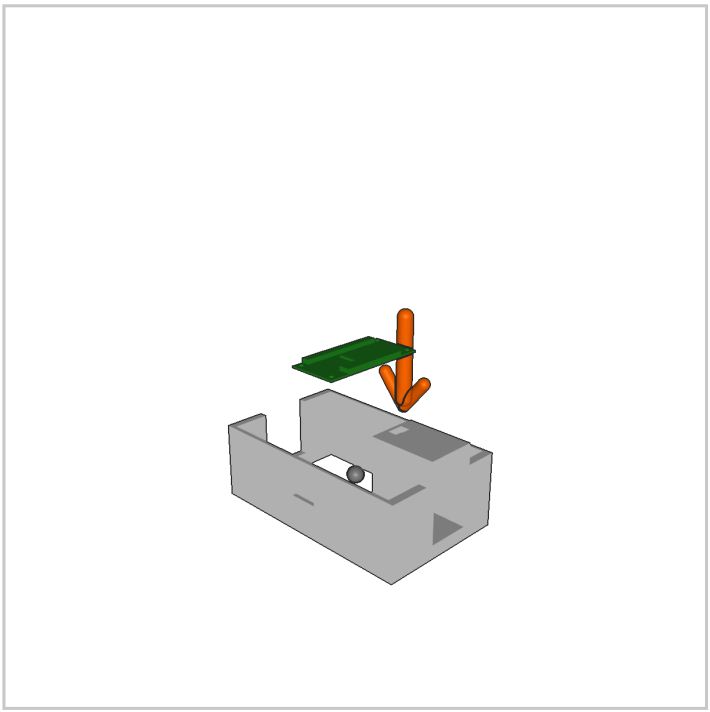

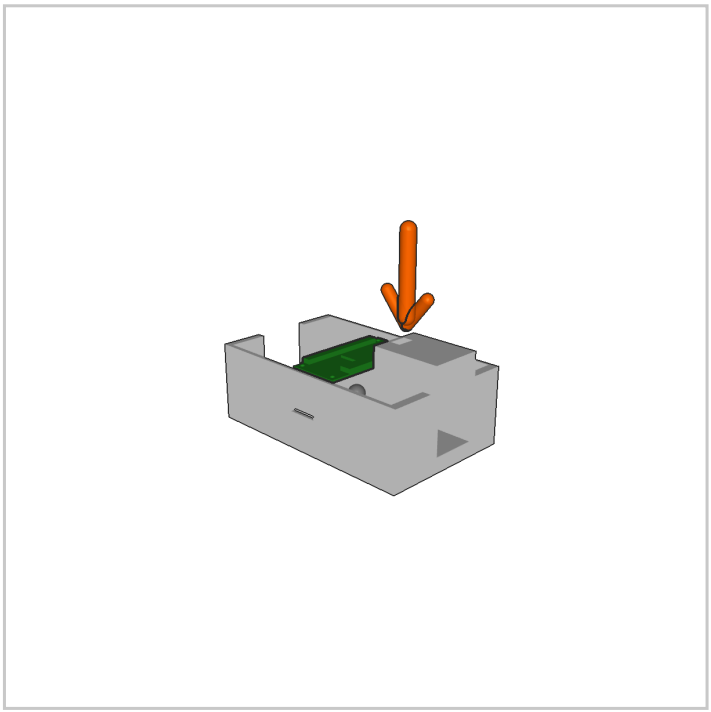

3b. Fasten with screws

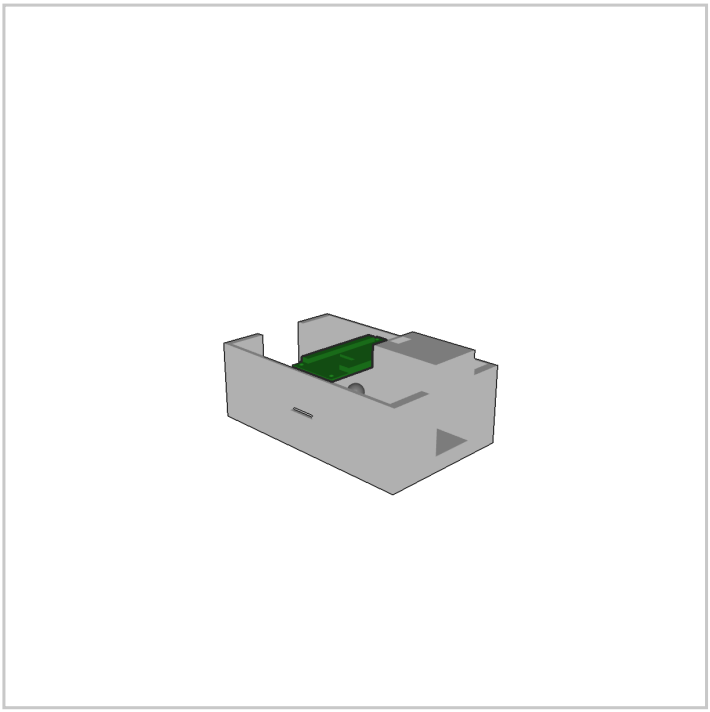

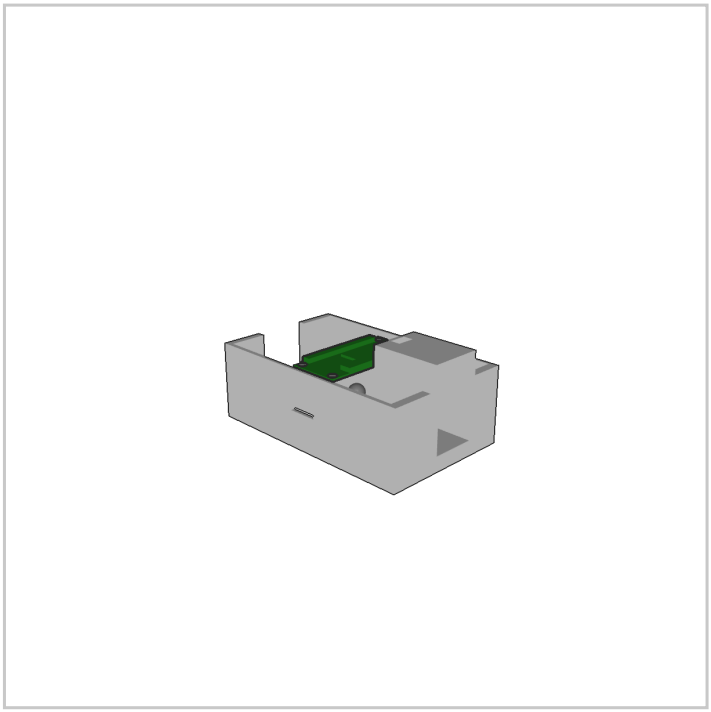

# Step 4

left wheel

4a. Insert servo into bracket

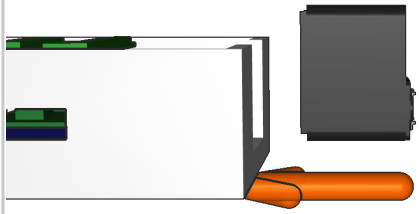

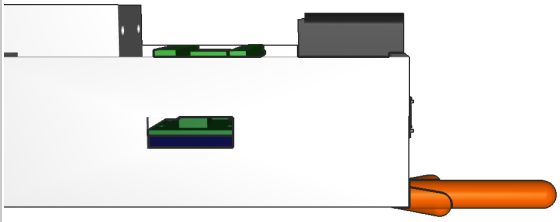

4b. Attach left rim onto horn

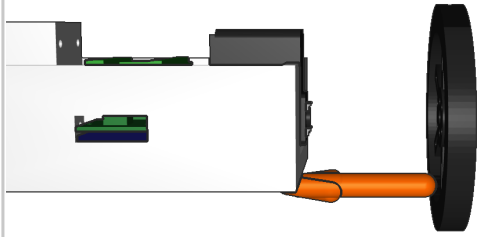

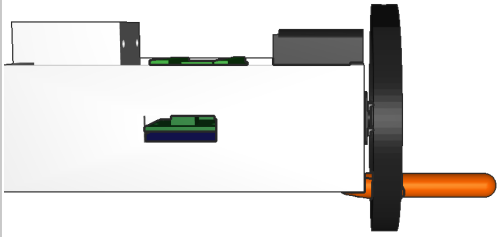

# Step 5

right wheel

5a. Insert servo into bracket

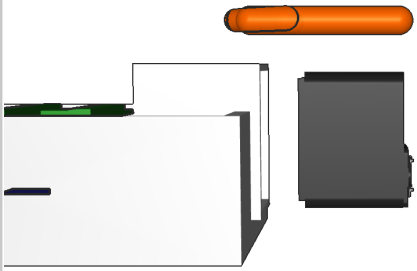

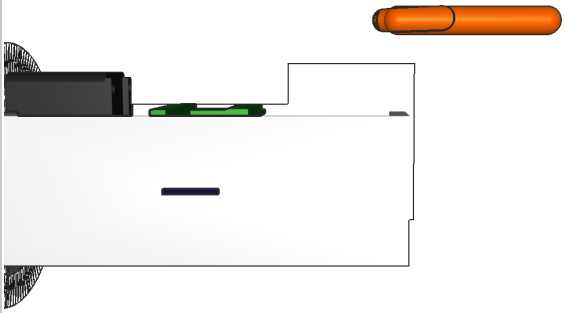
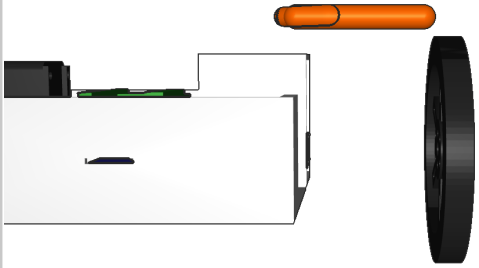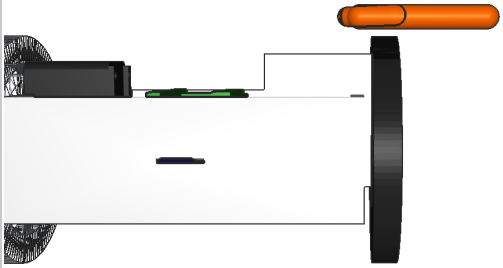
5b. Attach right rim onto horn