wheeler_arm

Completed assembly

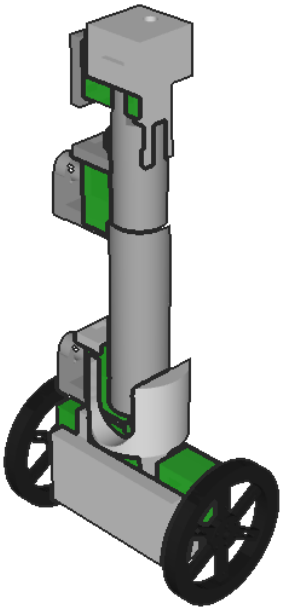

Step 1

pi

1a. Insert pi into pocket

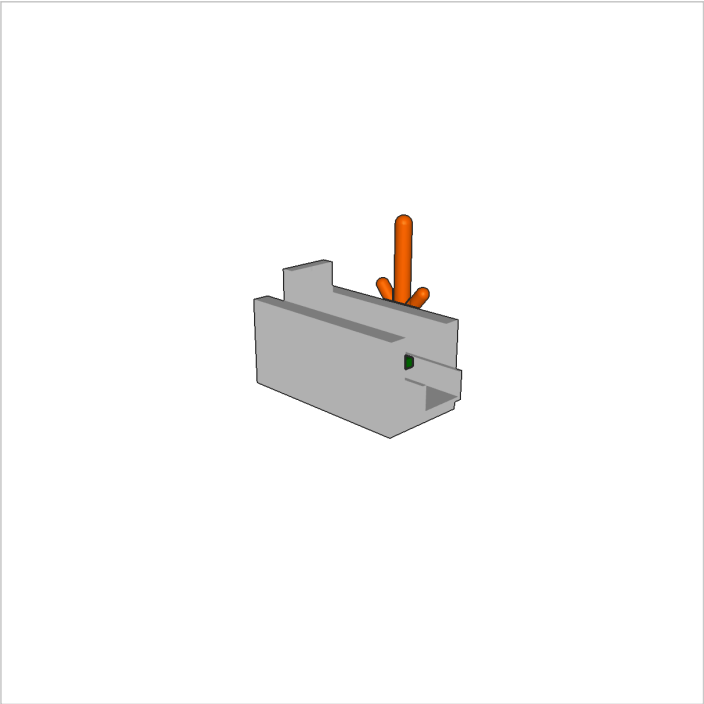

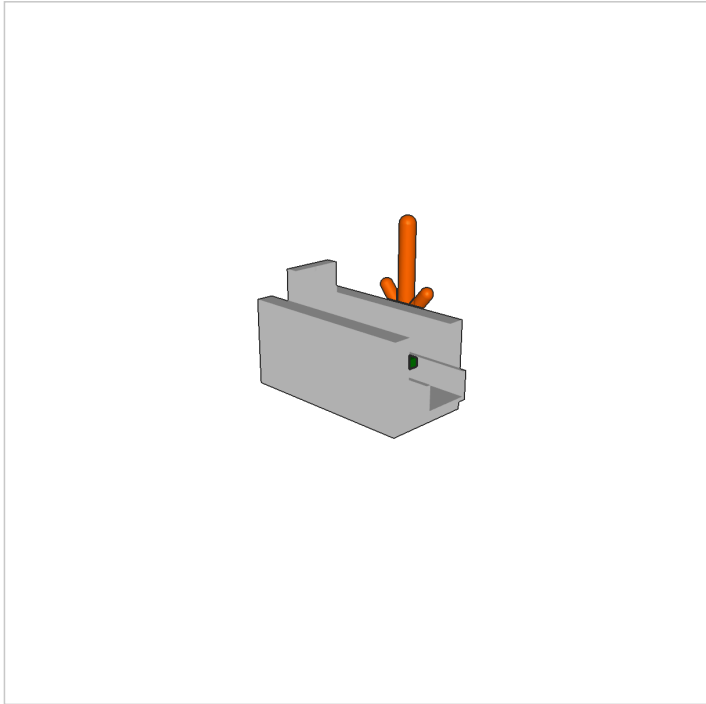

1b. Fasten with screws

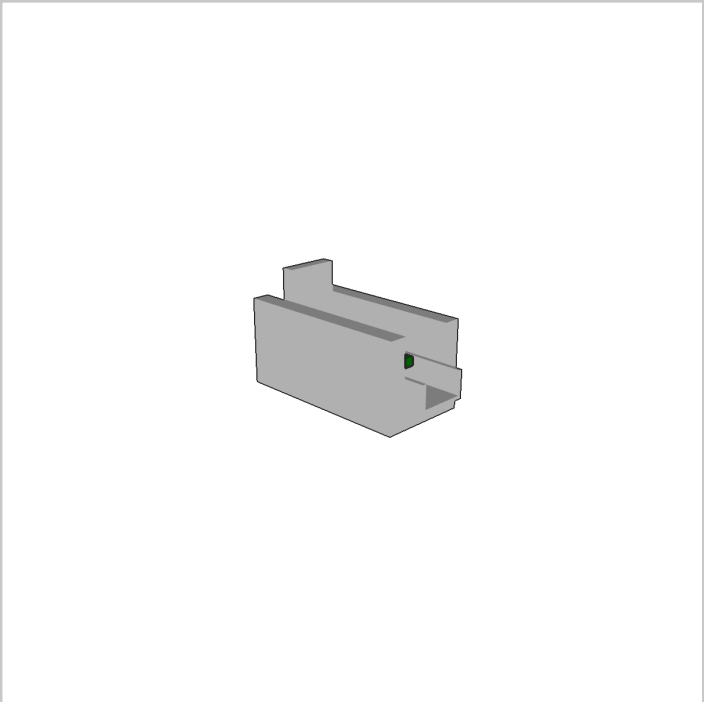

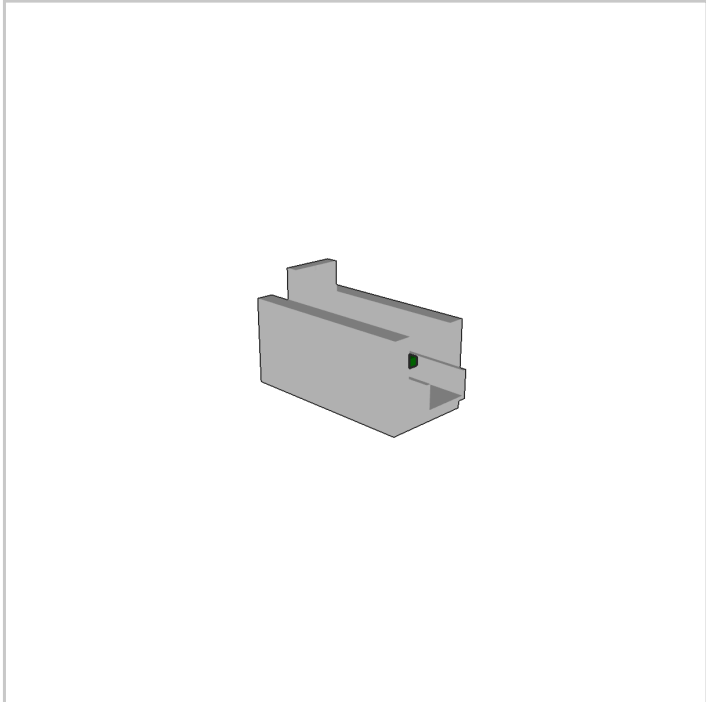

Step 2

battery

2a. Insert battery into pocket

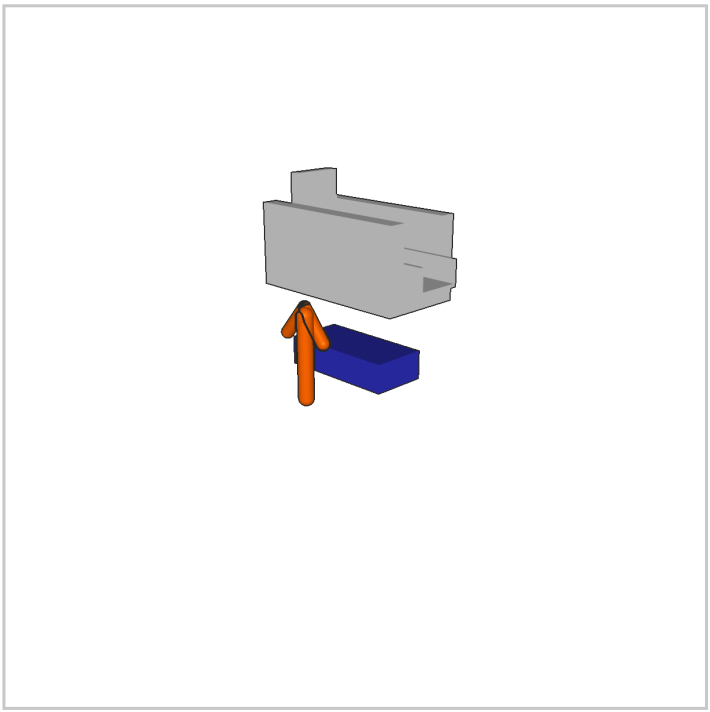

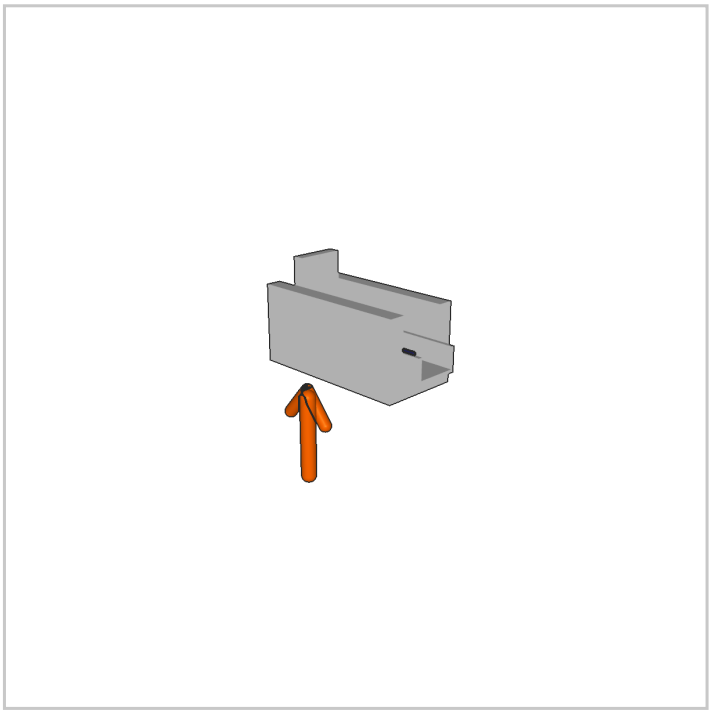

2b. Seat component

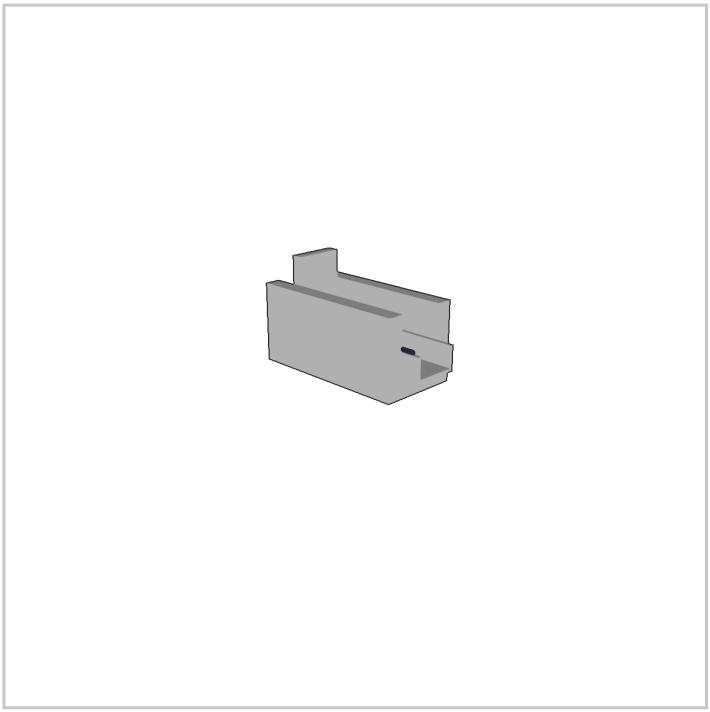

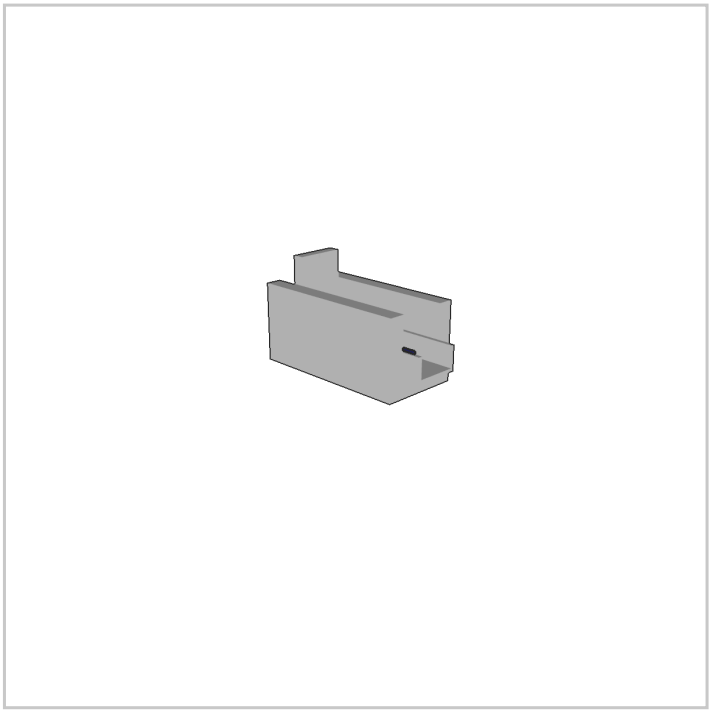

Step 3

camera

3a. Insert camera into pocket

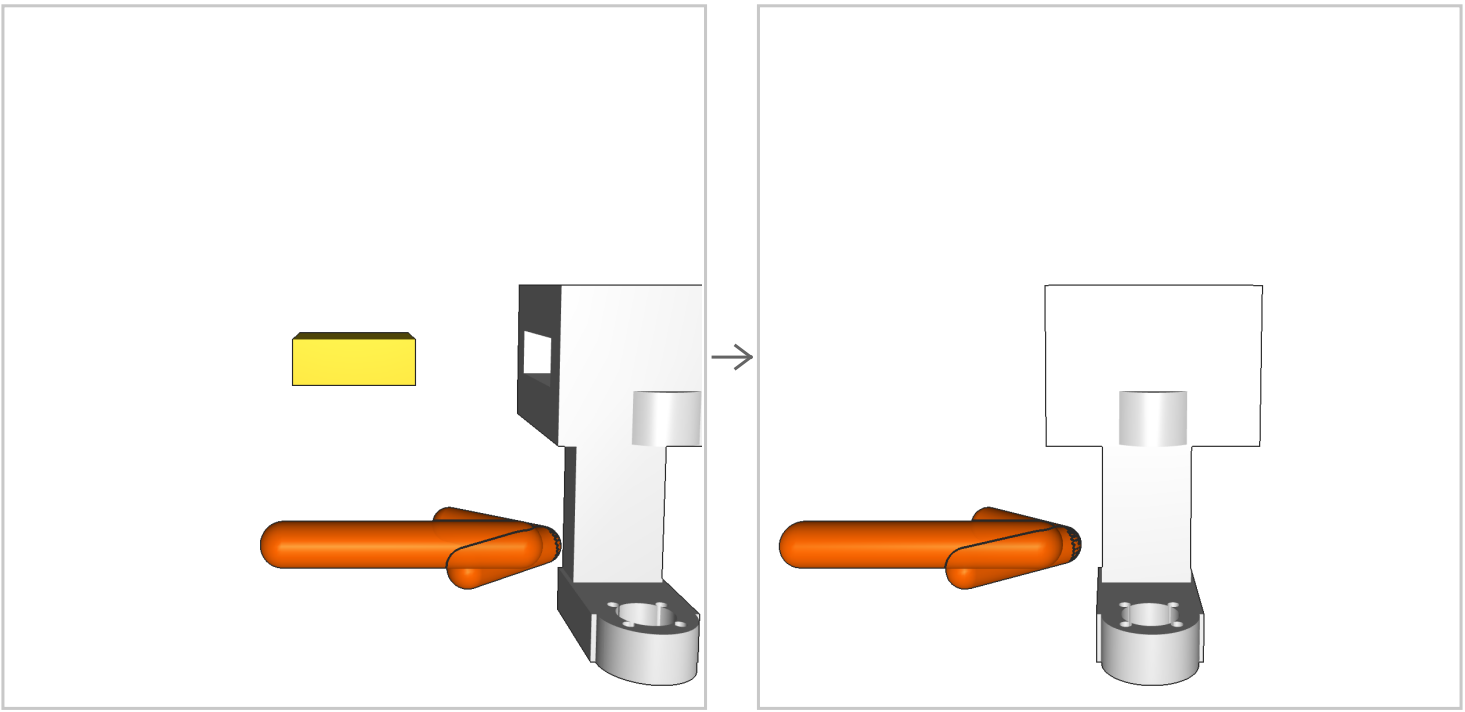

3b. Fasten with screws

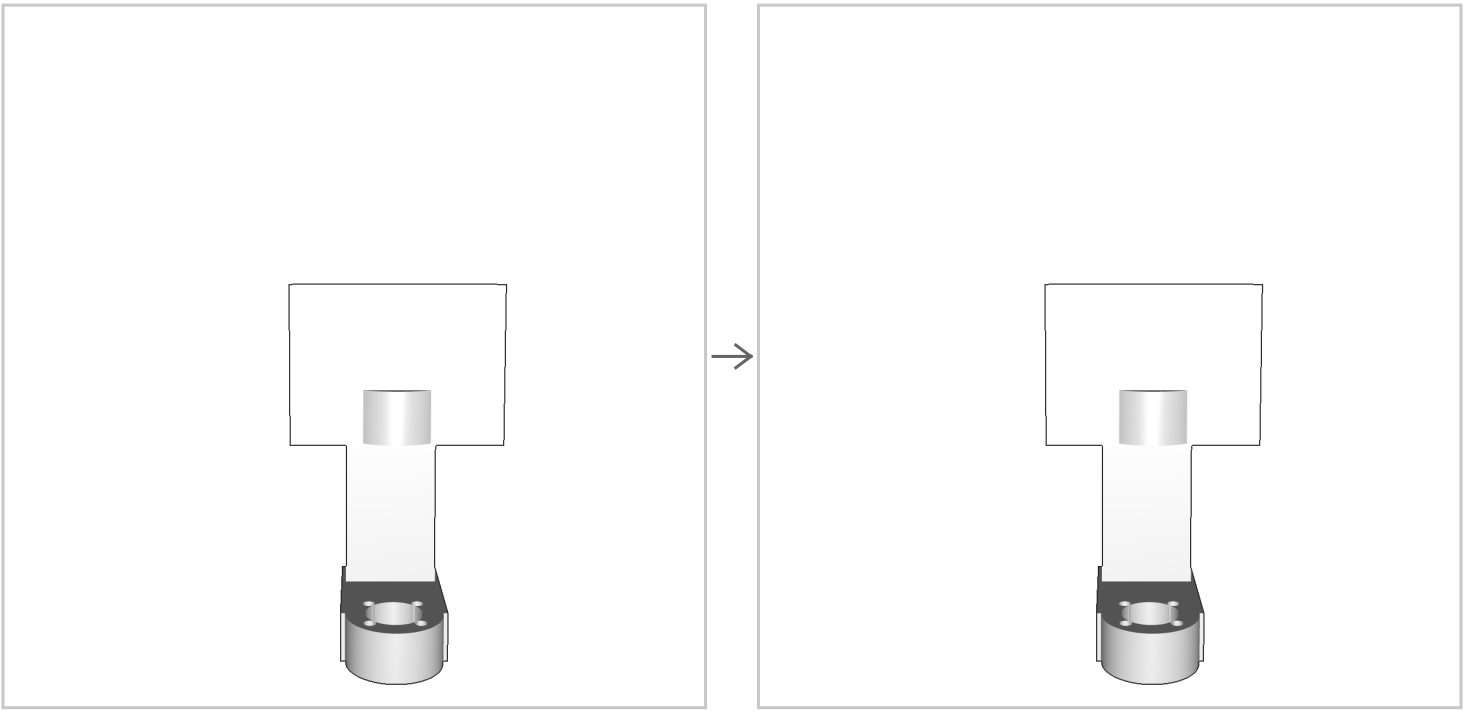

Step 4

shoulder yaw

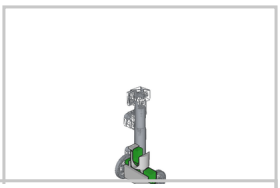

4a. Insert servo into bracket

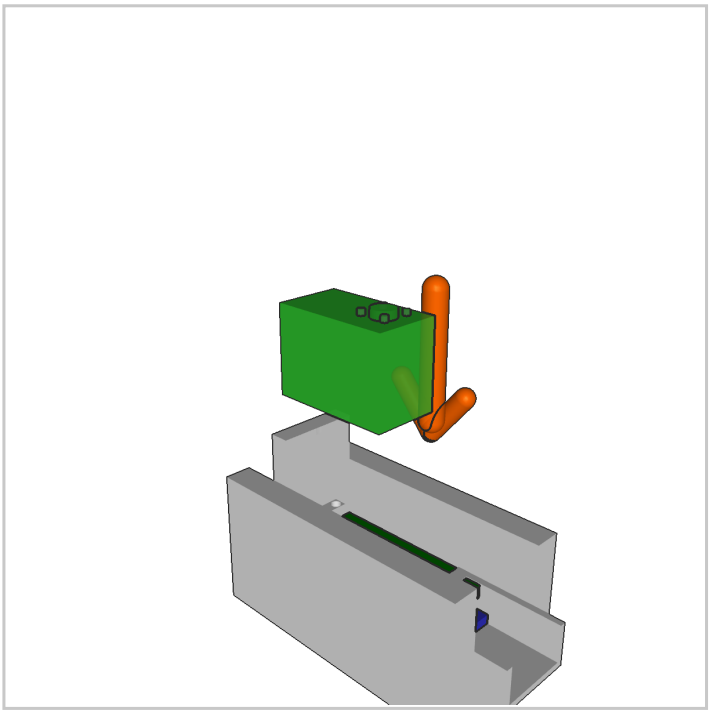

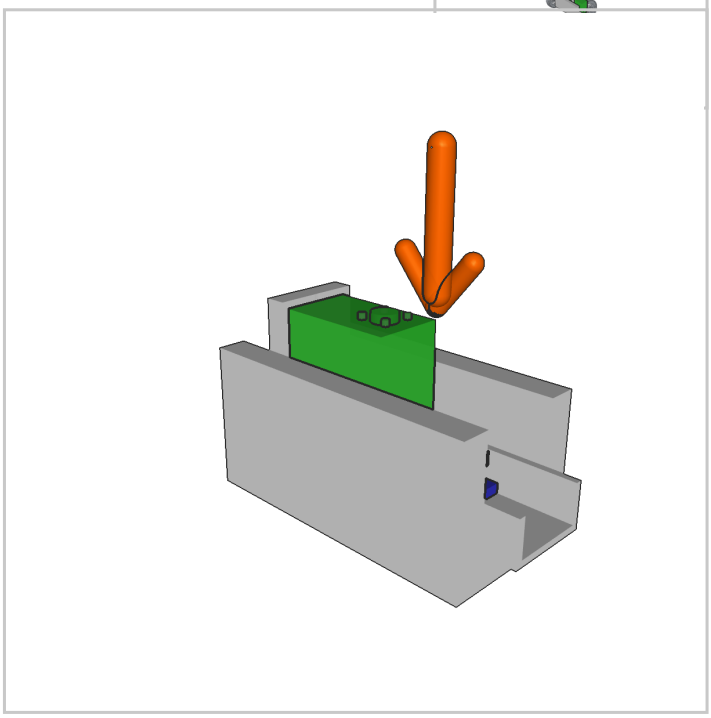

4b. Attach turntable onto horn

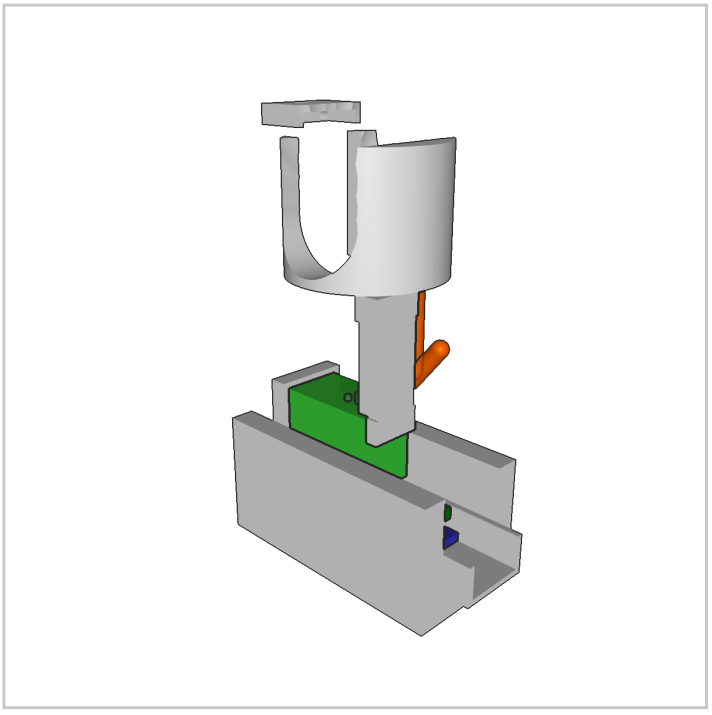

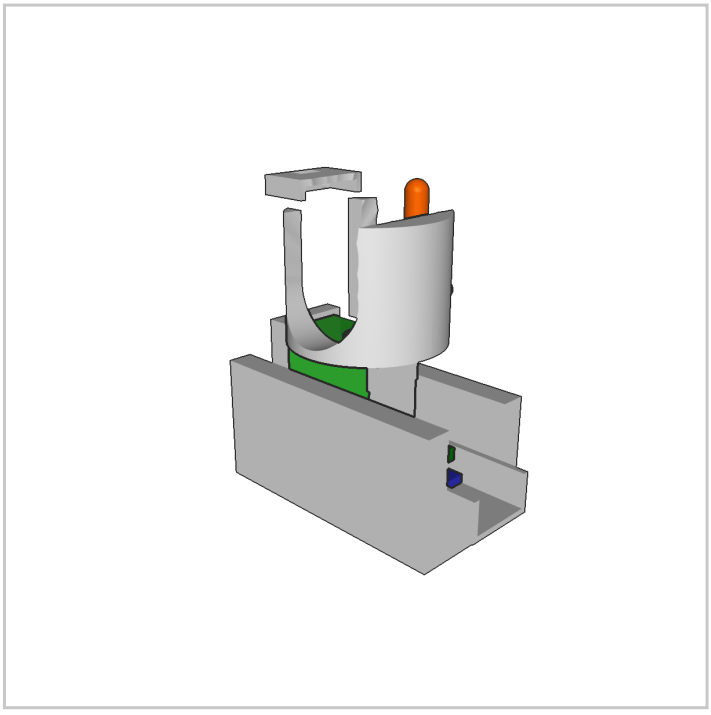

Step 5

shoulder pitch

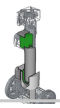

5a. Insert servo into bracket

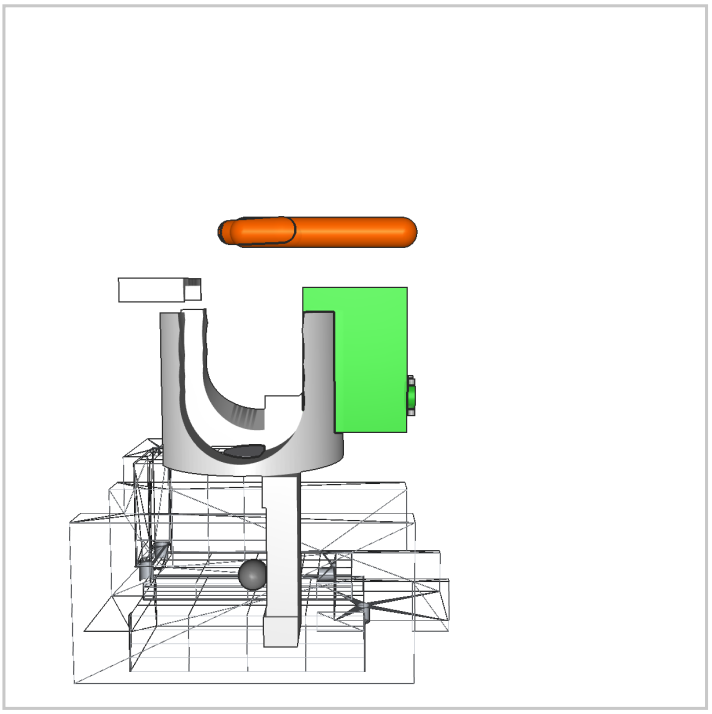

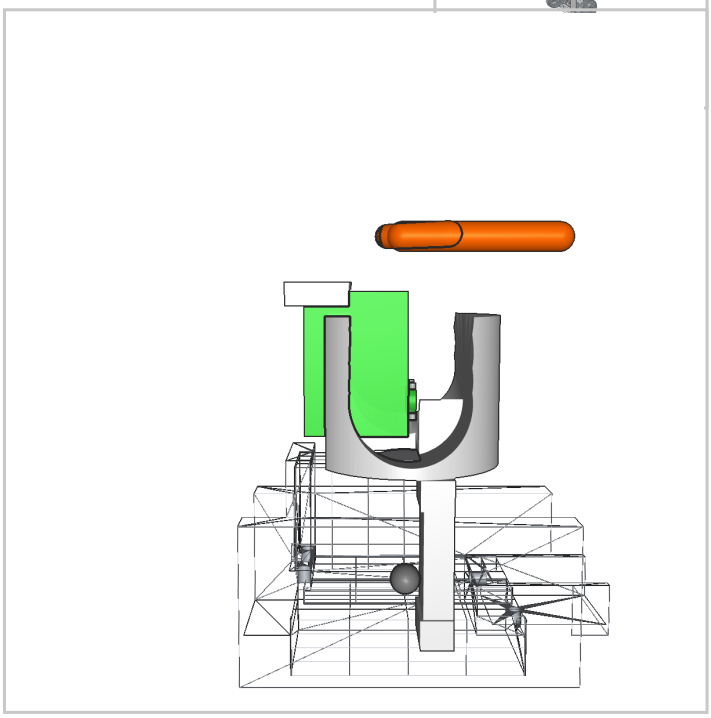

5b. Attach upper arm onto horn

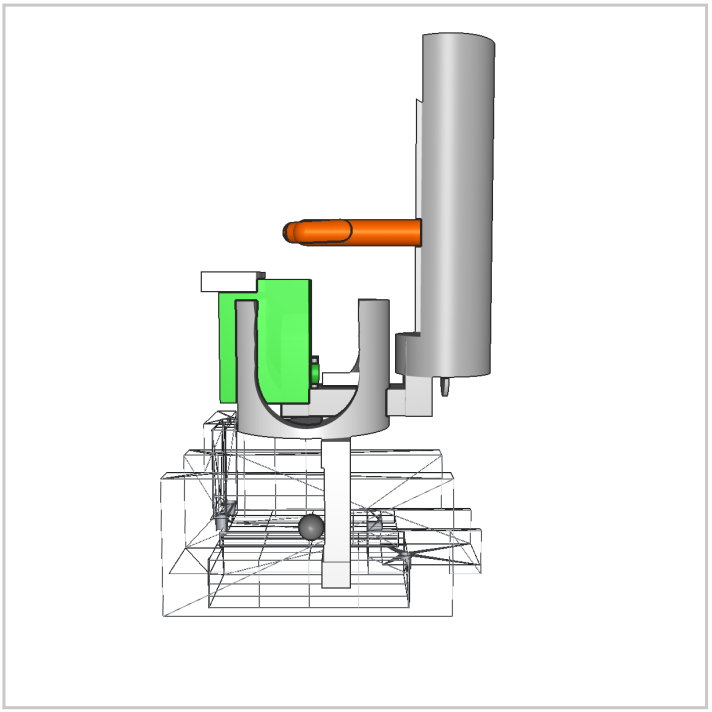

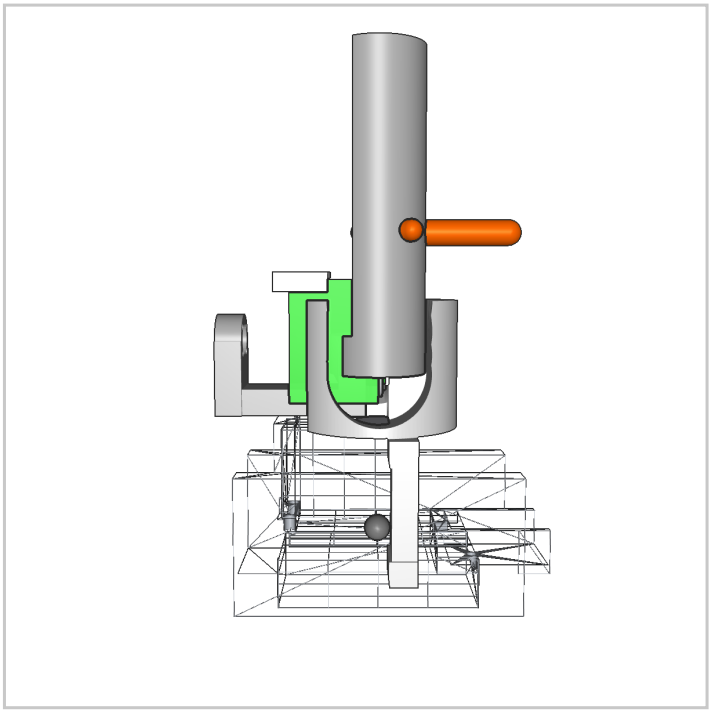

Step 6

elbow

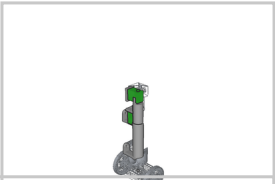

6a. Insert servo into bracket

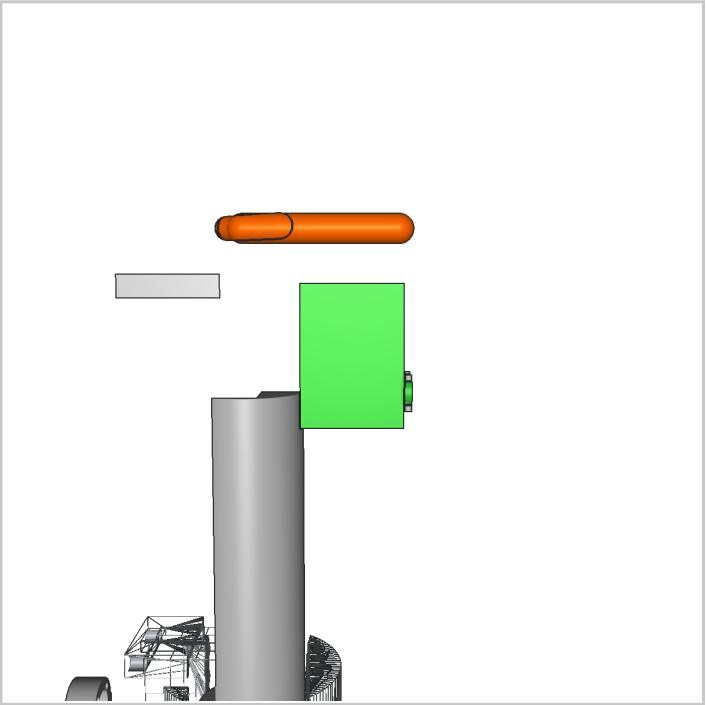

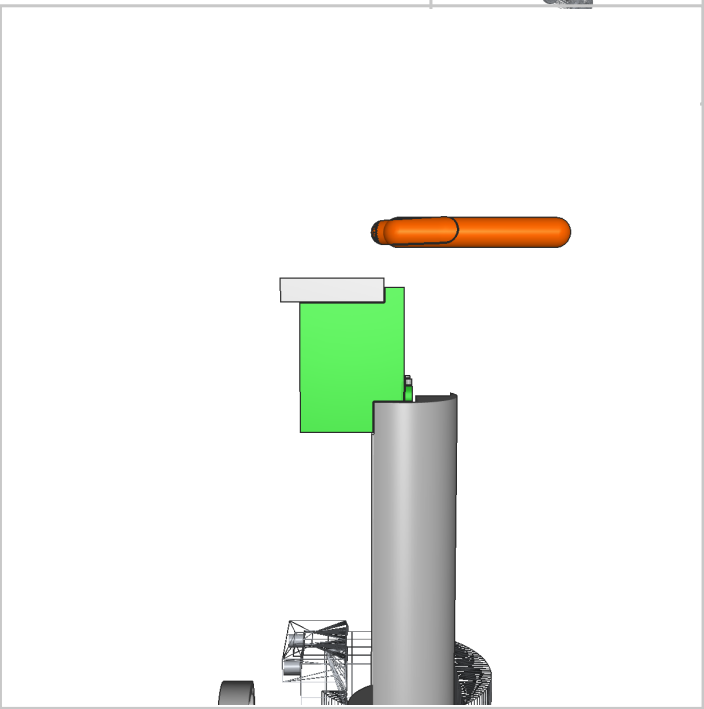

6b. Attach forearm onto horn

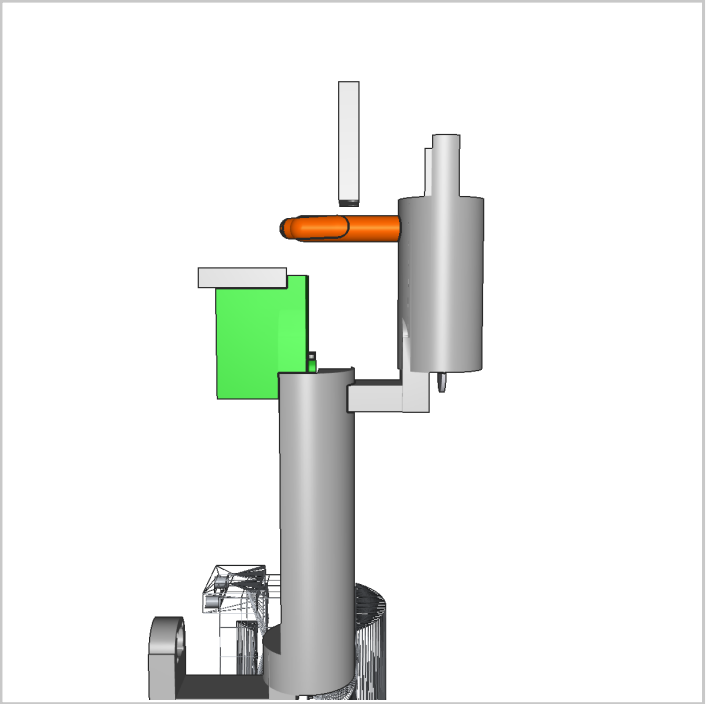

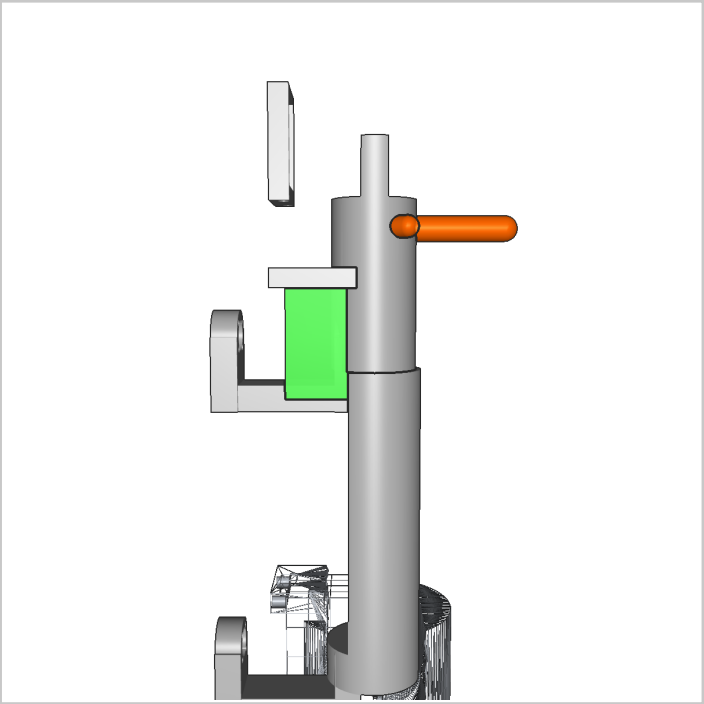

Step 7

wrist

7a. Insert servo into bracket

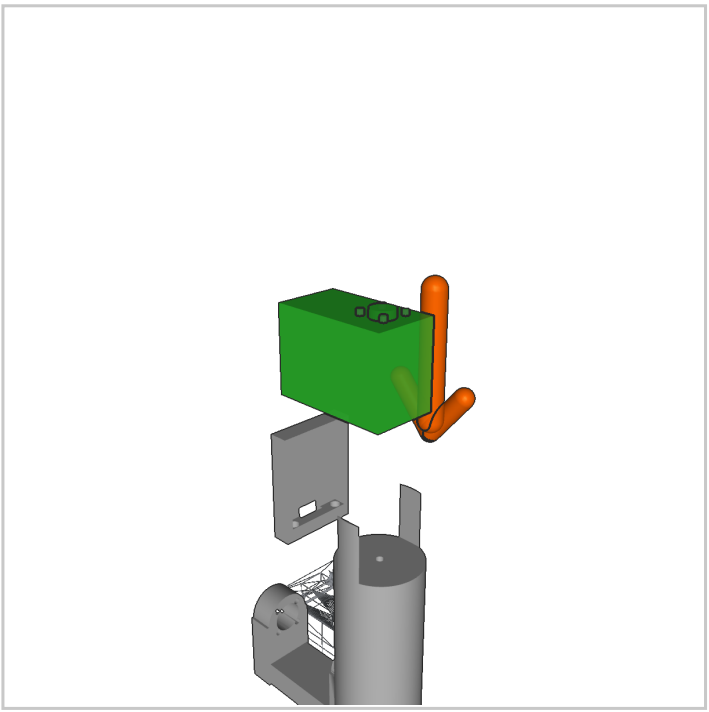

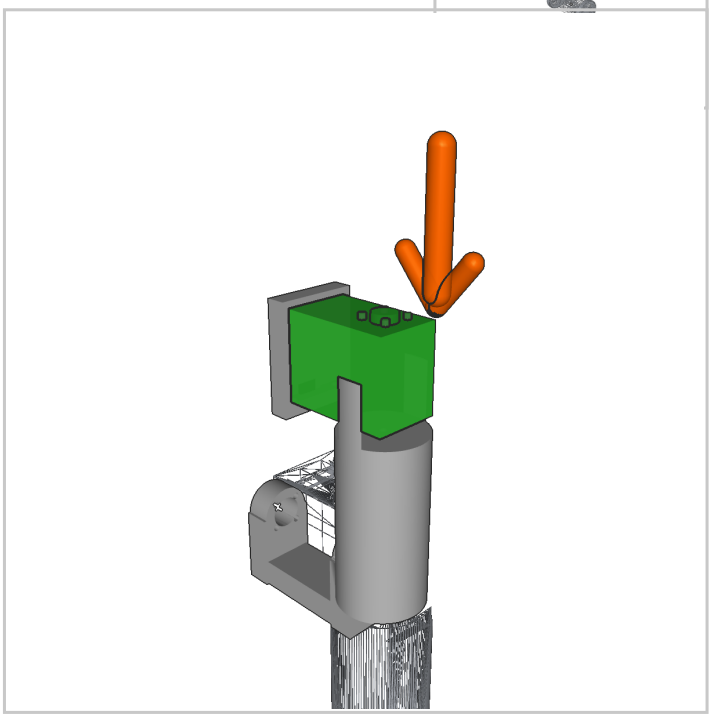

7b. Attach hand onto horn

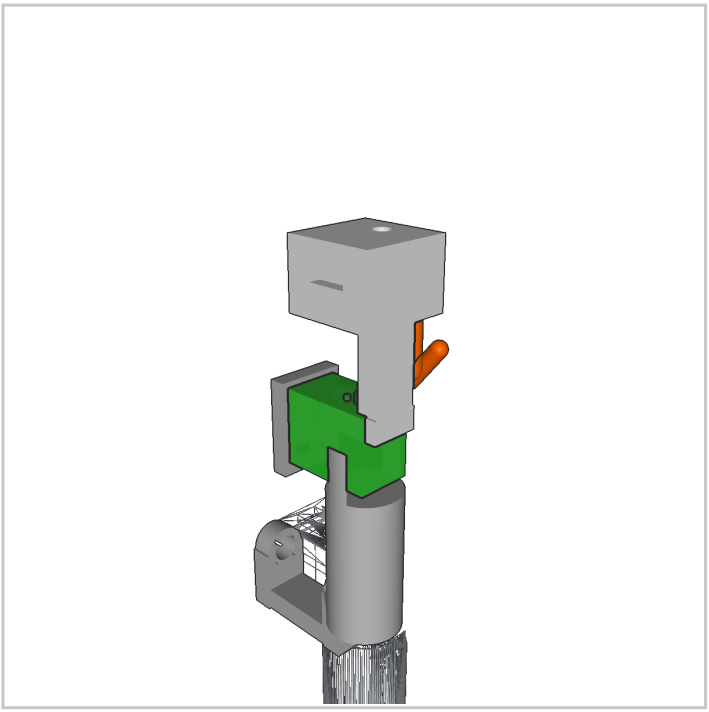

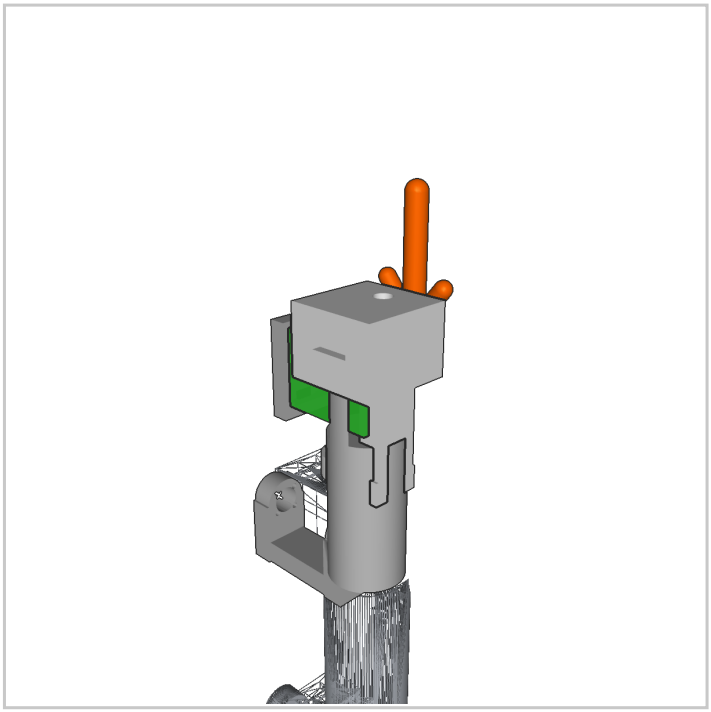

Step 8

left wheel

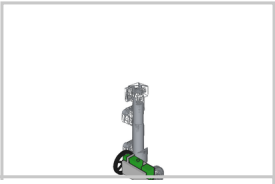

8a. Insert servo into bracket

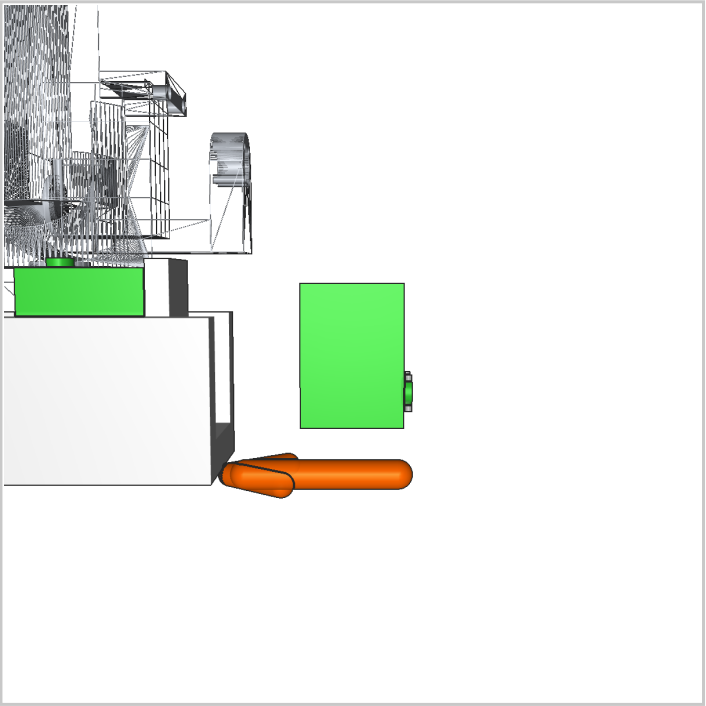

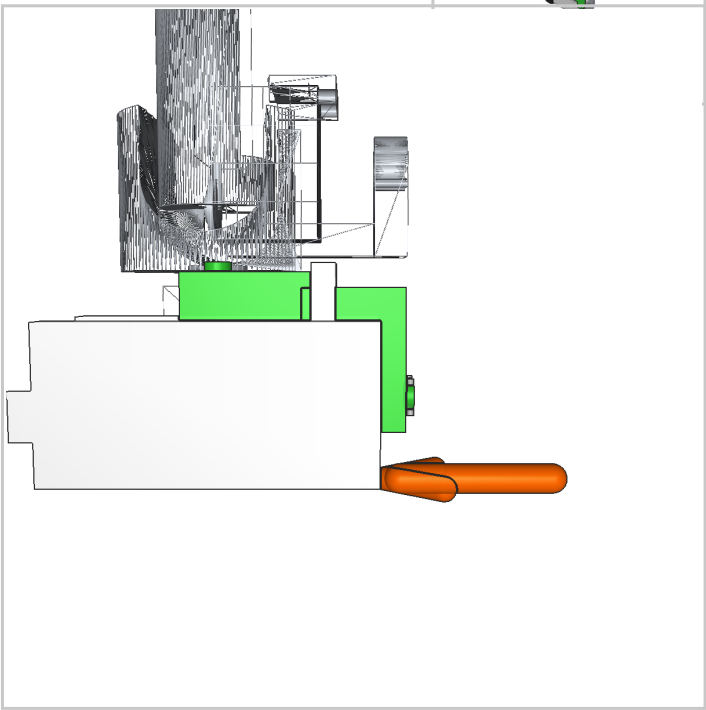

8b. Attach left rim onto horn

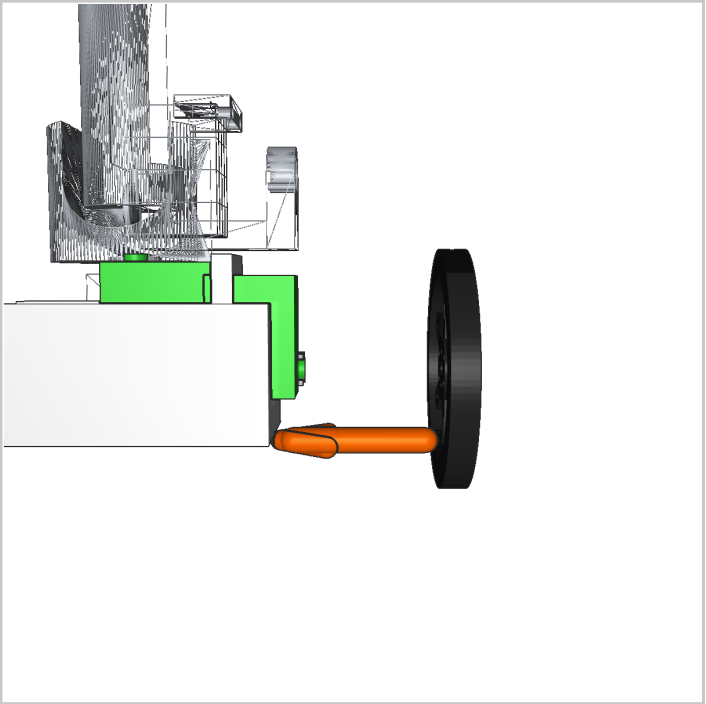

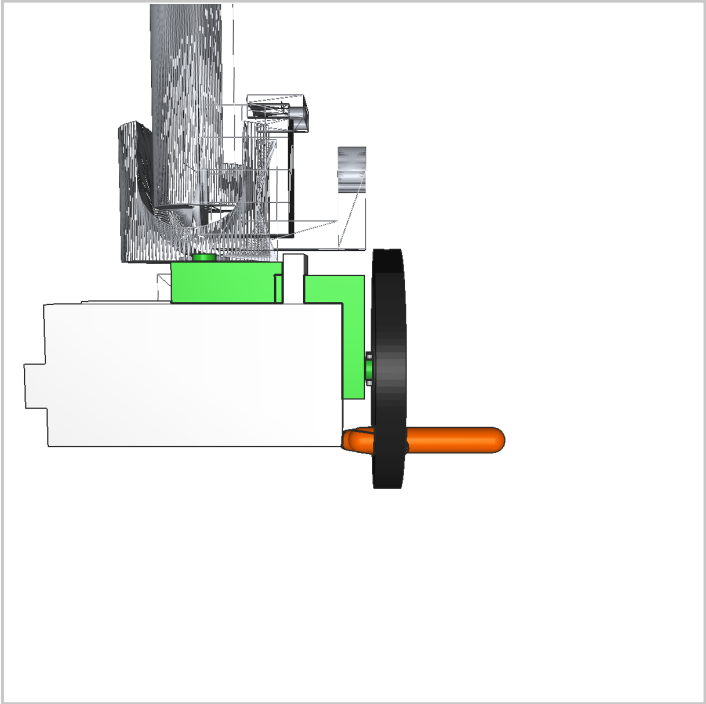

Step 9

right wheel

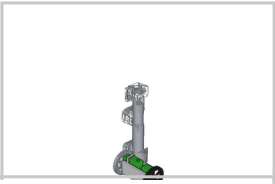

9a. Insert servo into bracket

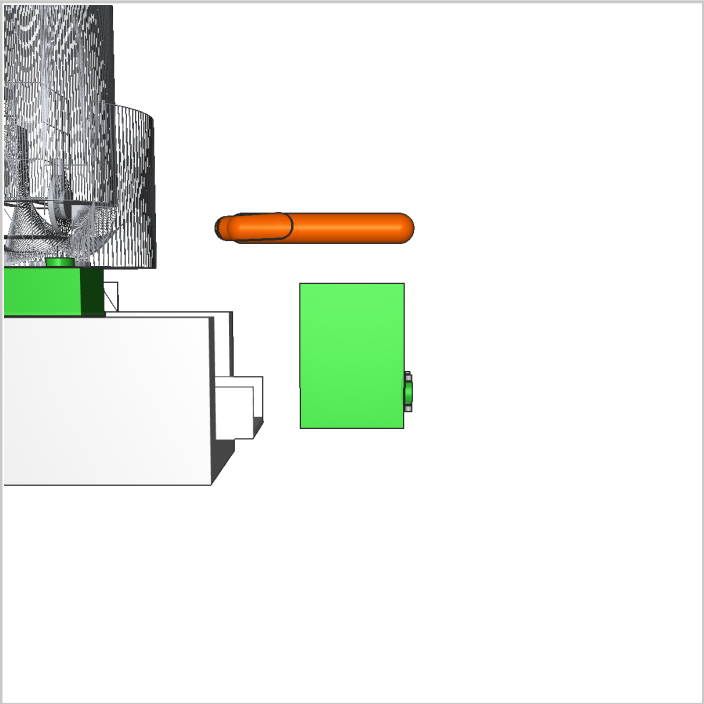

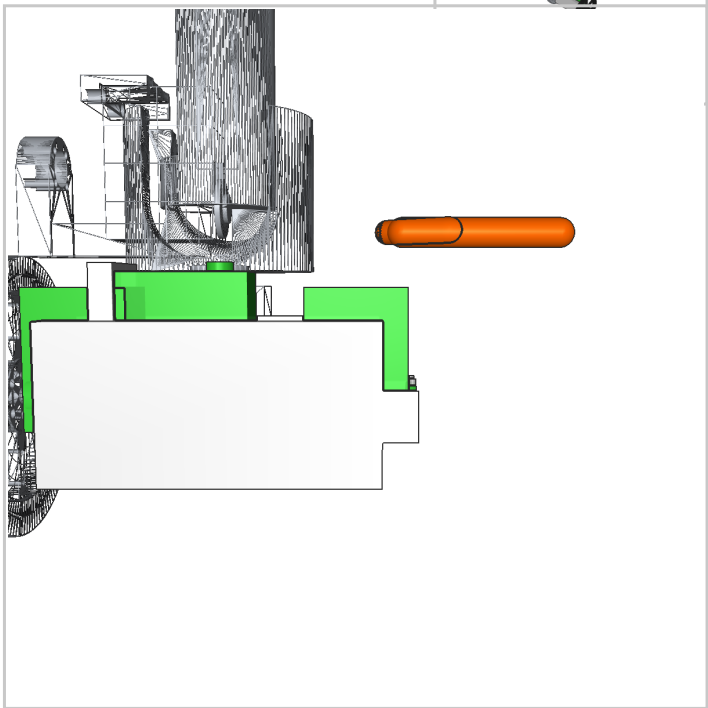
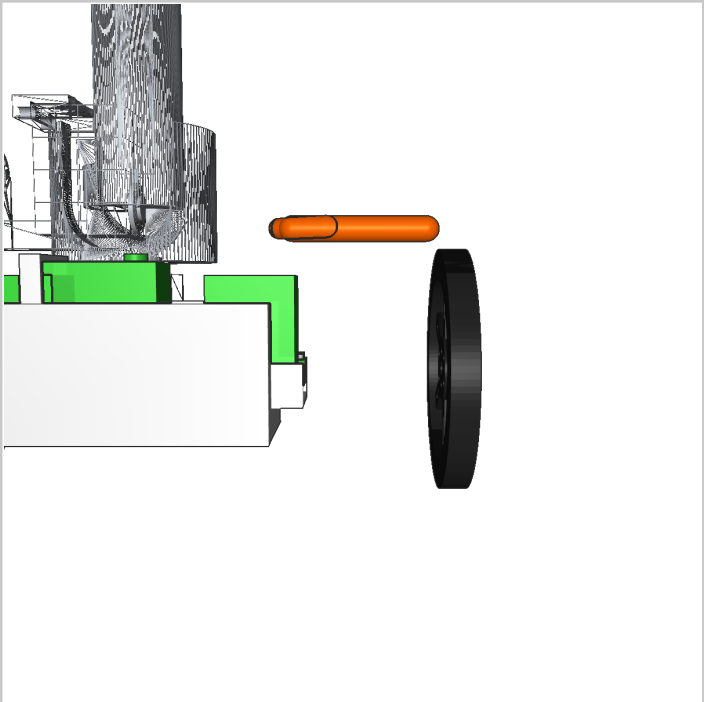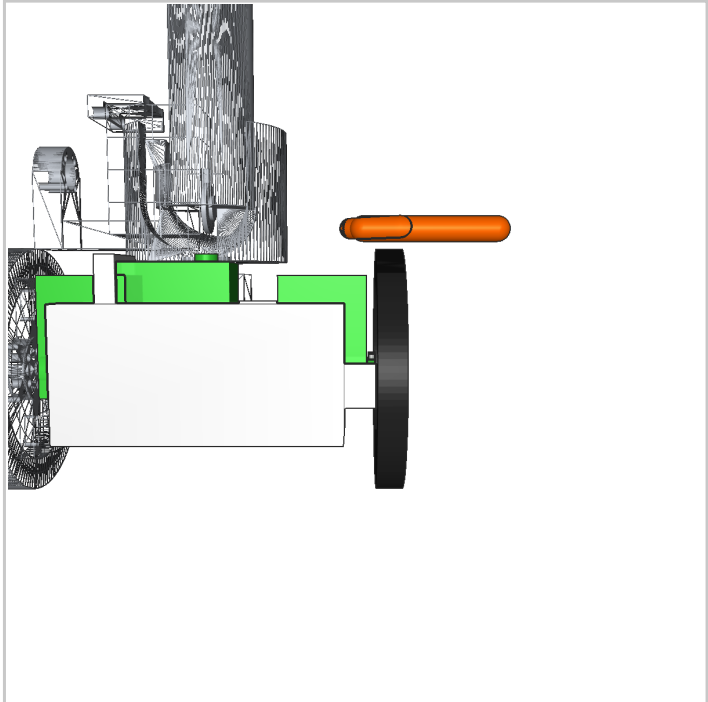
9b. Attach right rim onto horn