# wheeler_arm

Completed assembly

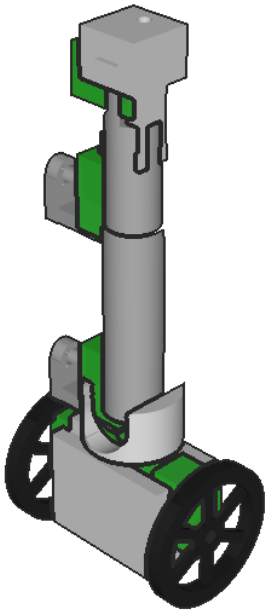

# Step 1

pi

1a. Insert pi into pocket

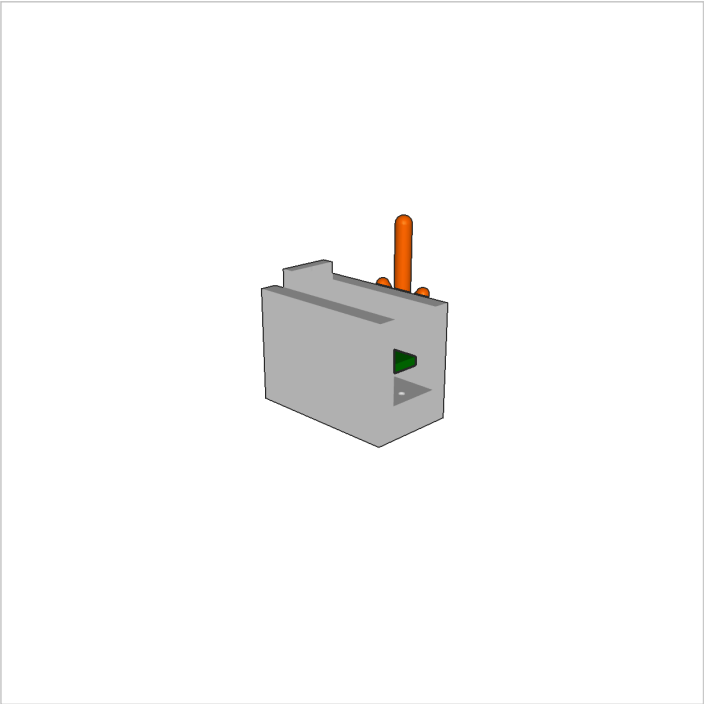

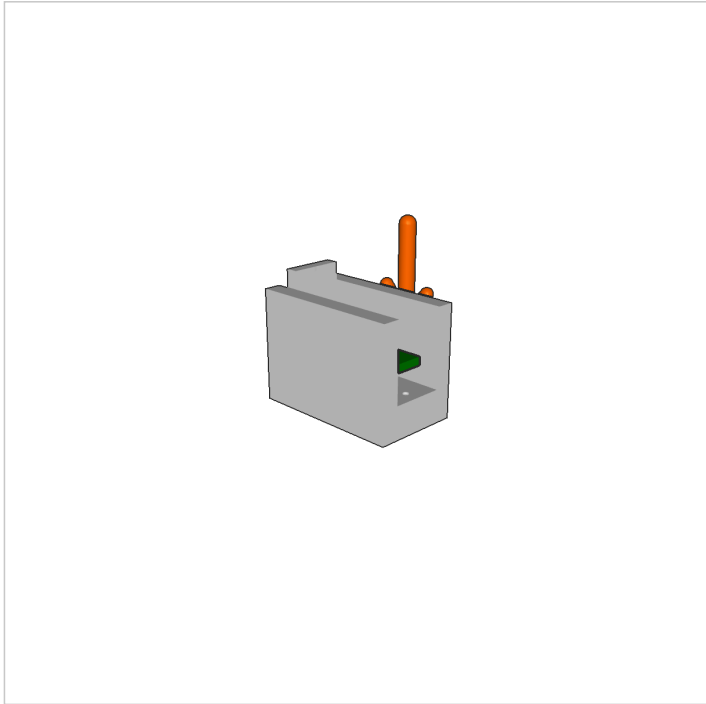

1b. Fasten with screws

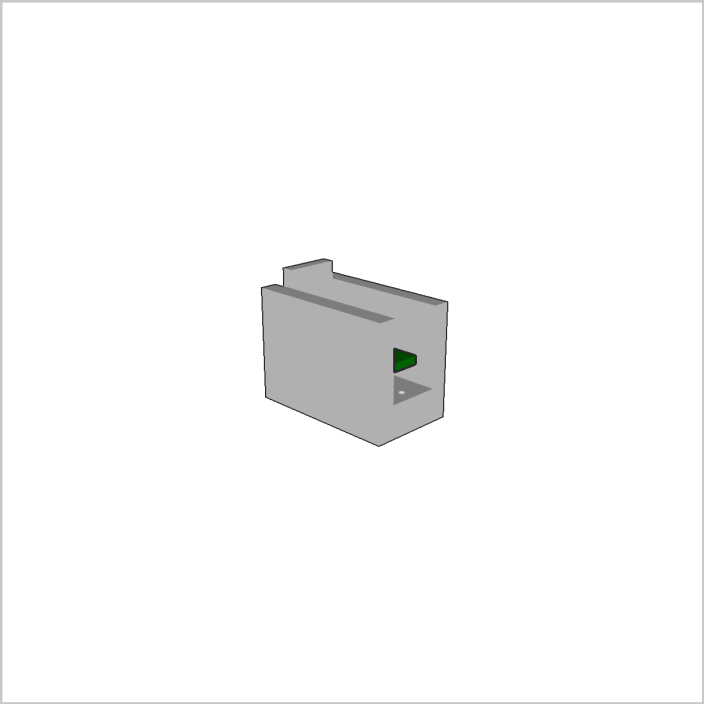

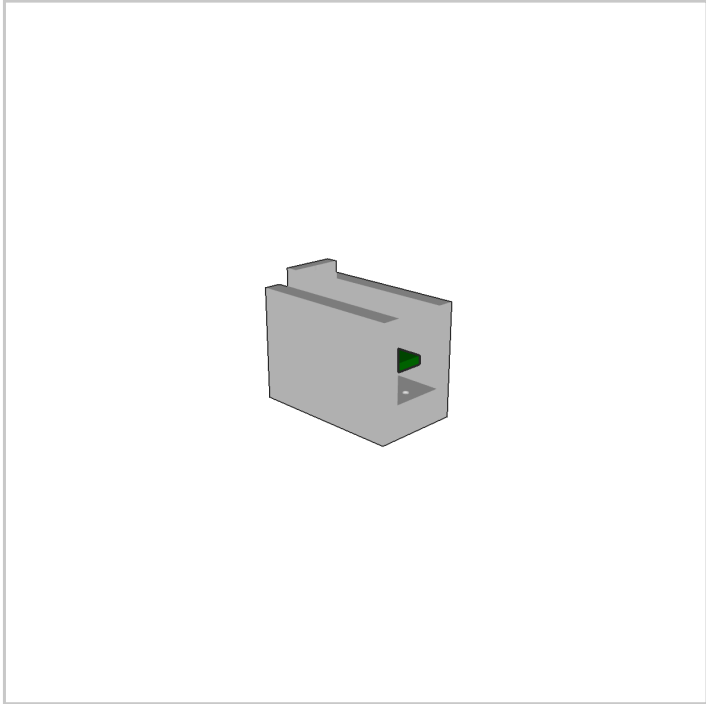

# Step 2

battery

2a. Insert battery into pocket

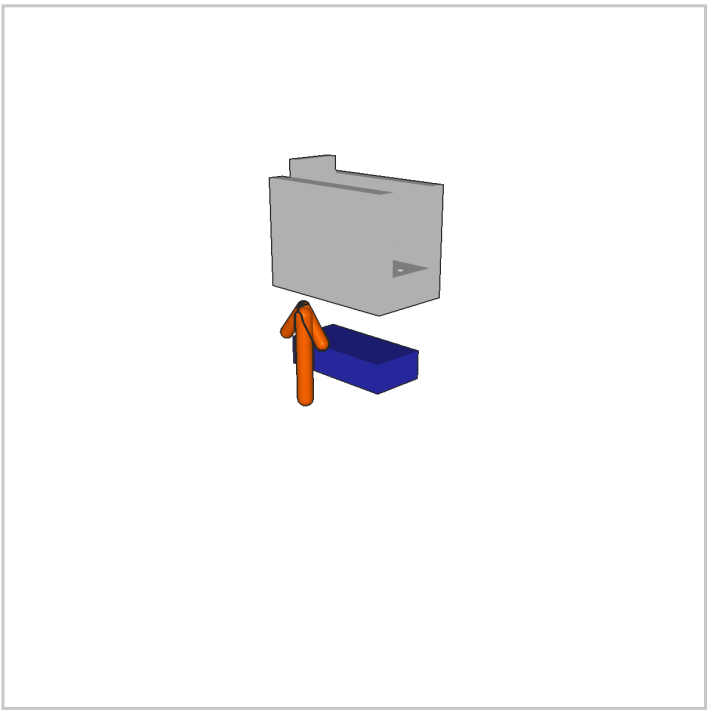

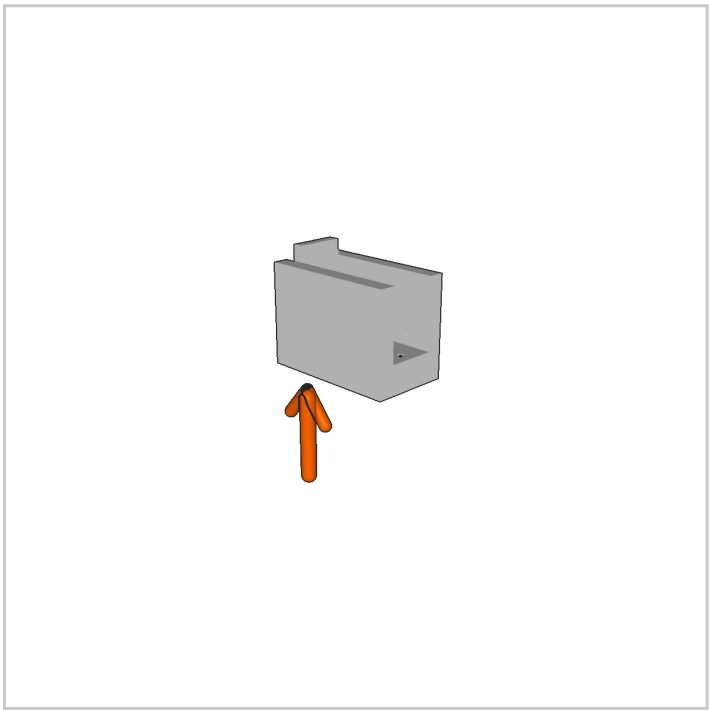

2b. Seat component

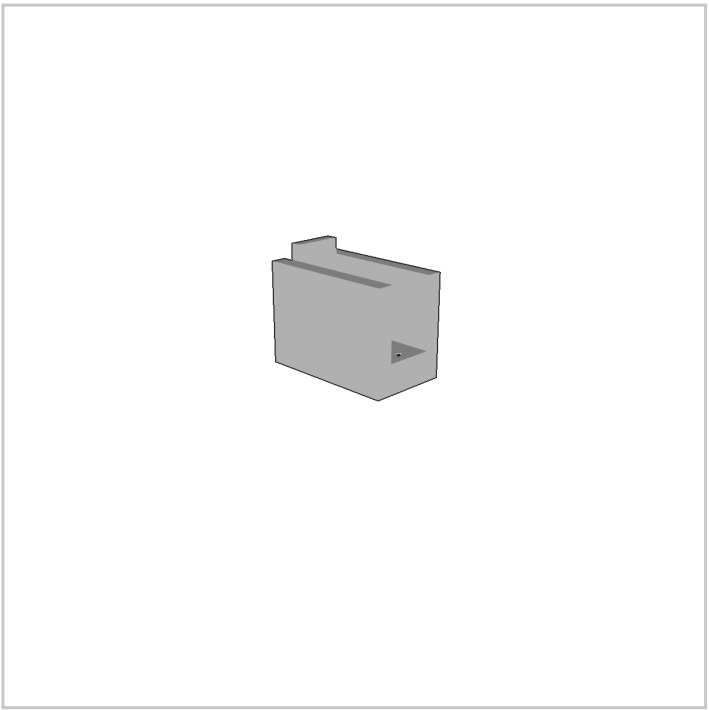

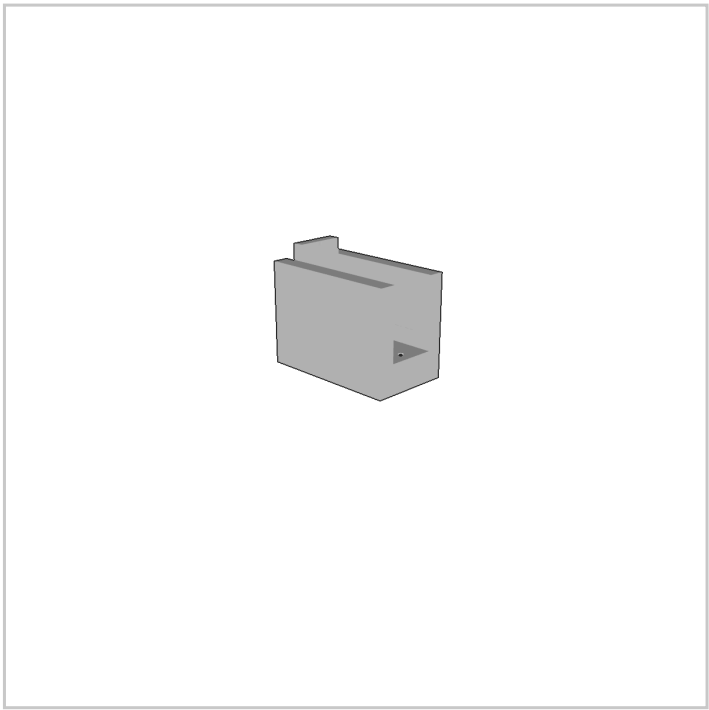

# Step 3

camera

3a. Insert camera into pocket

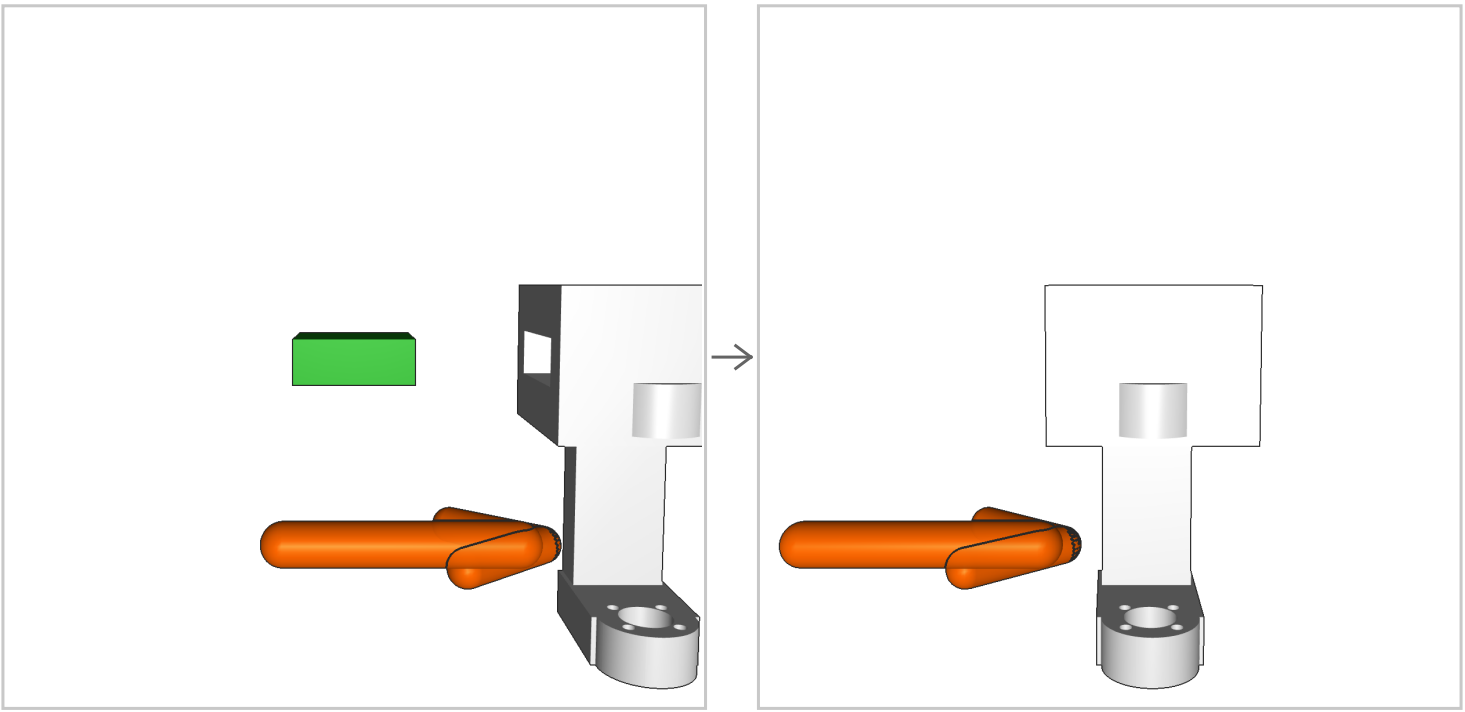

3b. Fasten with screws

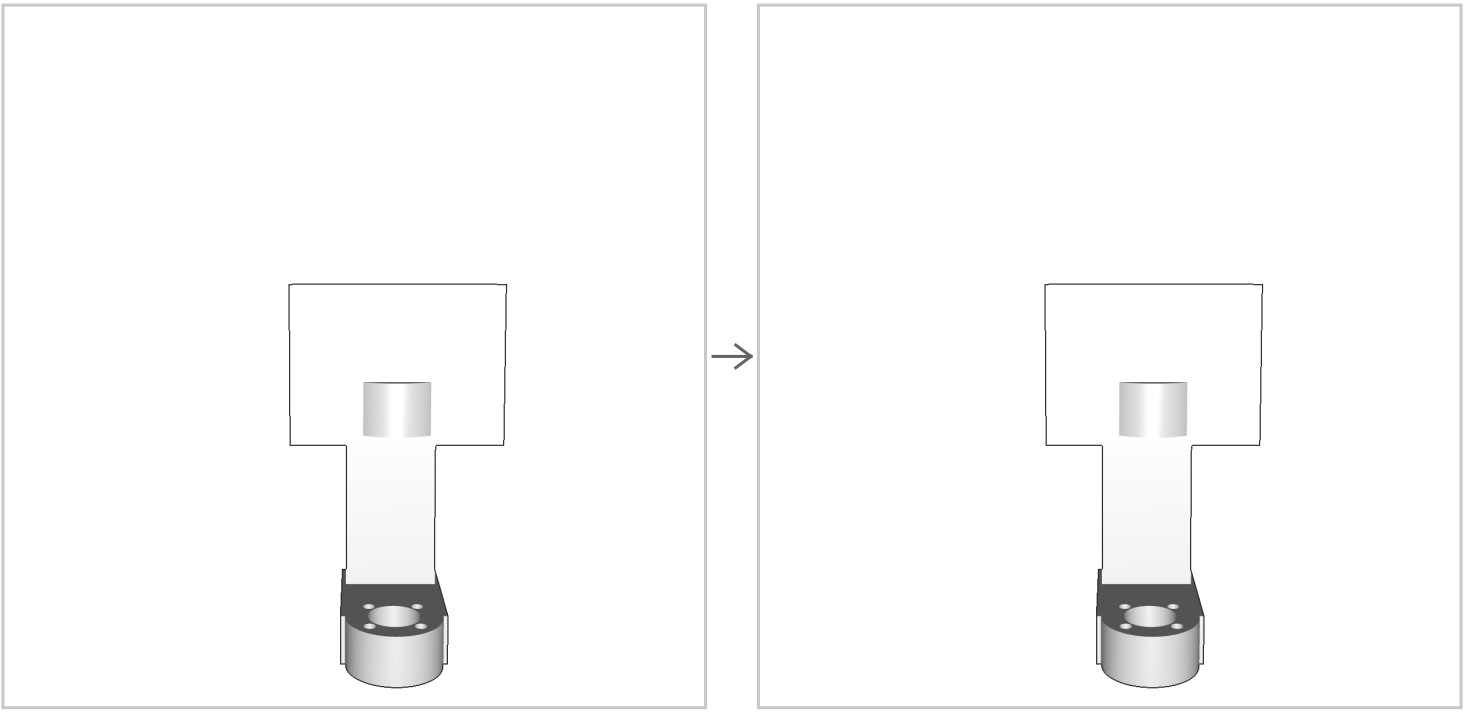

# Step 4

shoulder yaw

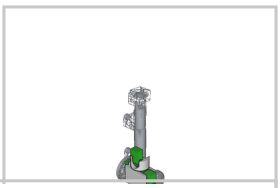

4a. Insert servo into bracket

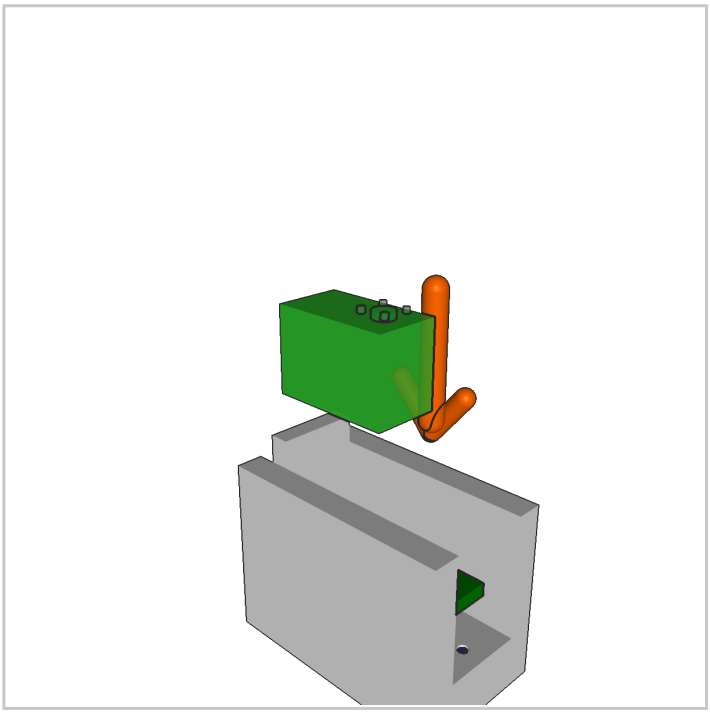

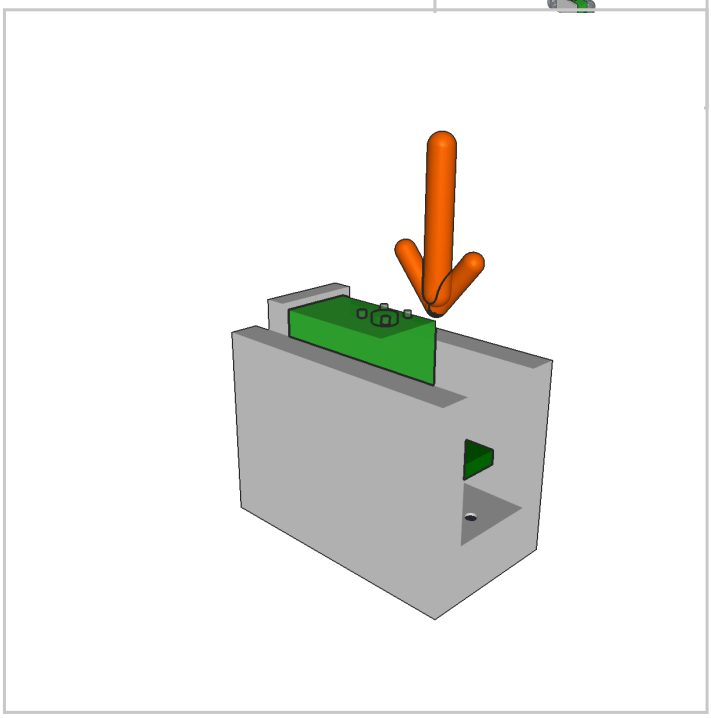

4b. Attach turntable onto horn

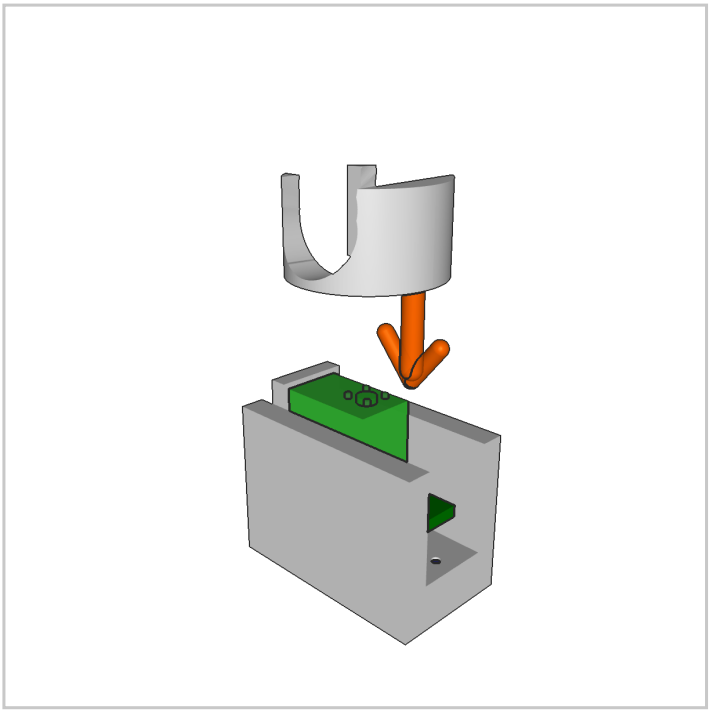

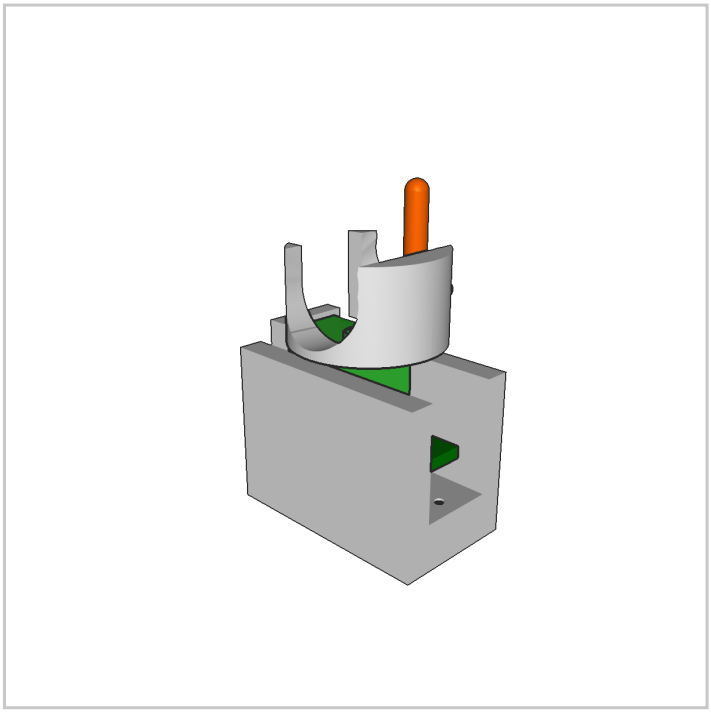

# Step 5

shoulder pitch

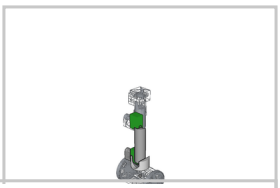

5a. Insert servo into bracket

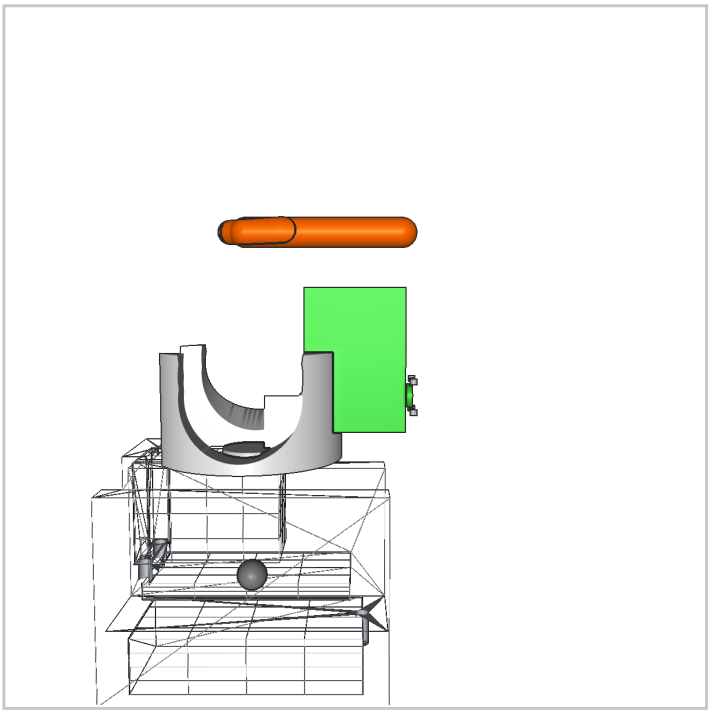

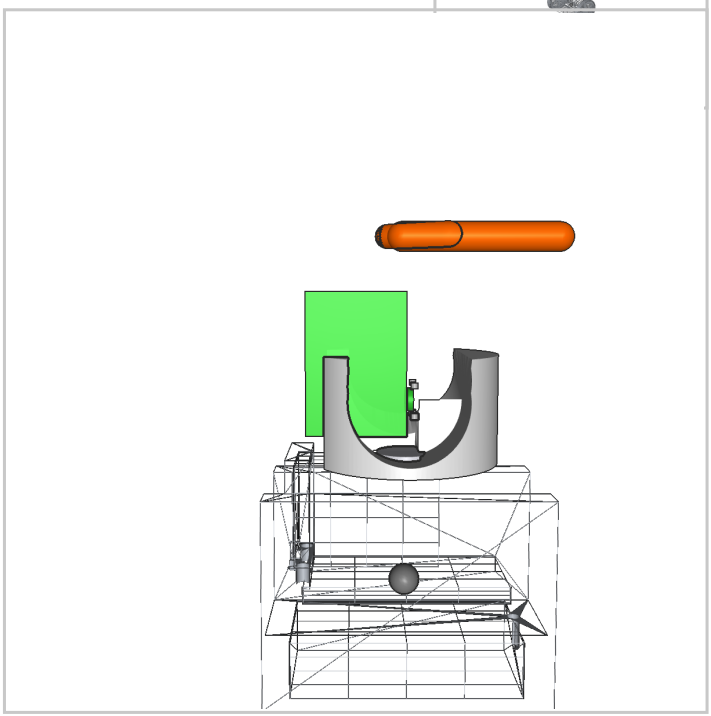

5b. Attach upper arm onto horn

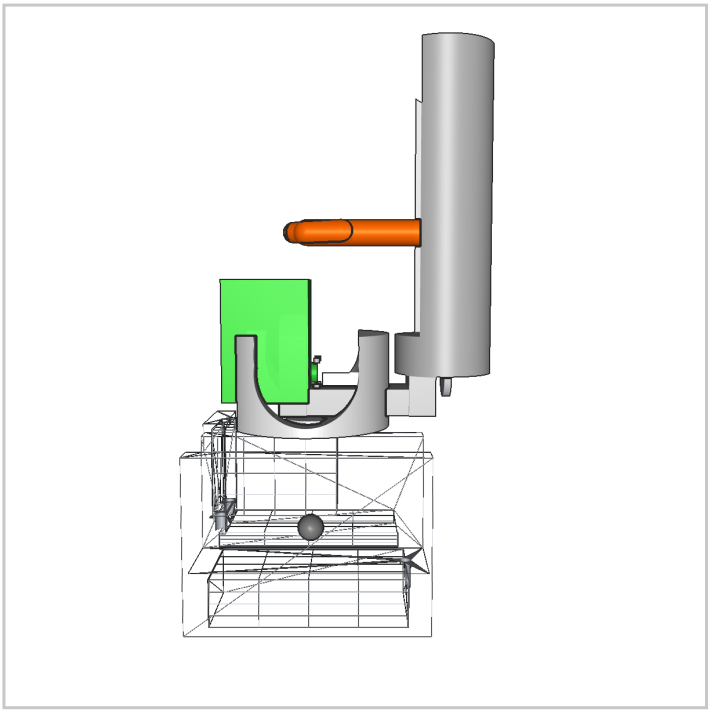

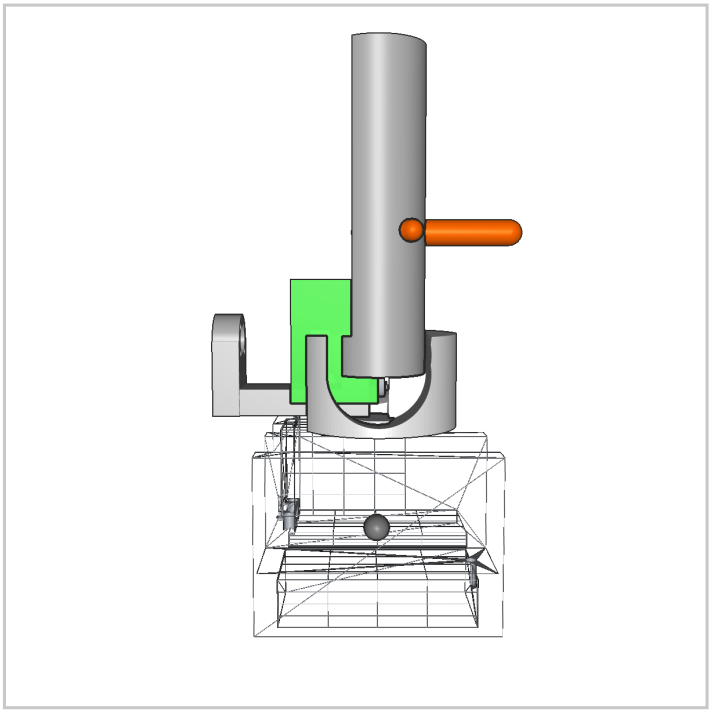

# Step 6

elbow

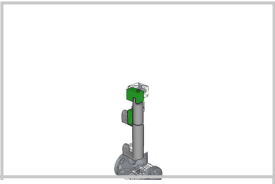

6a. Insert servo into bracket

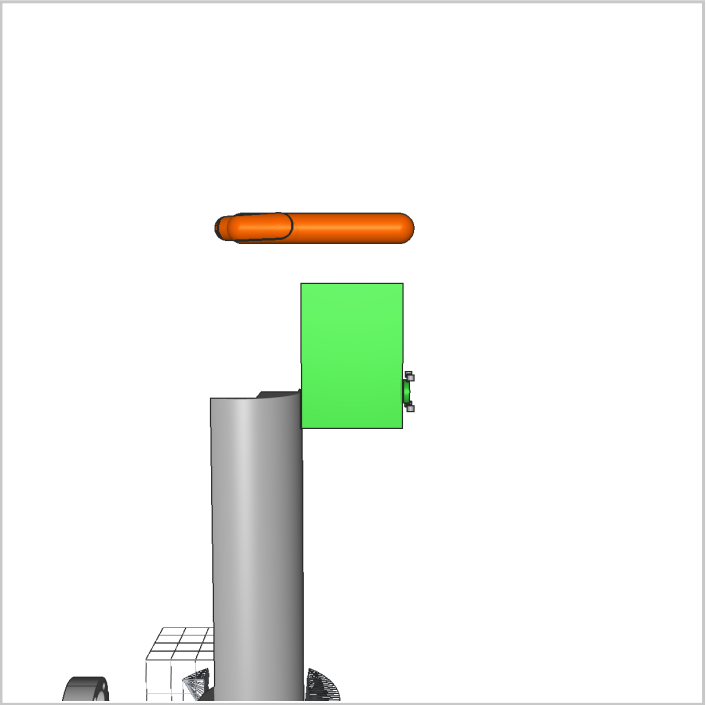

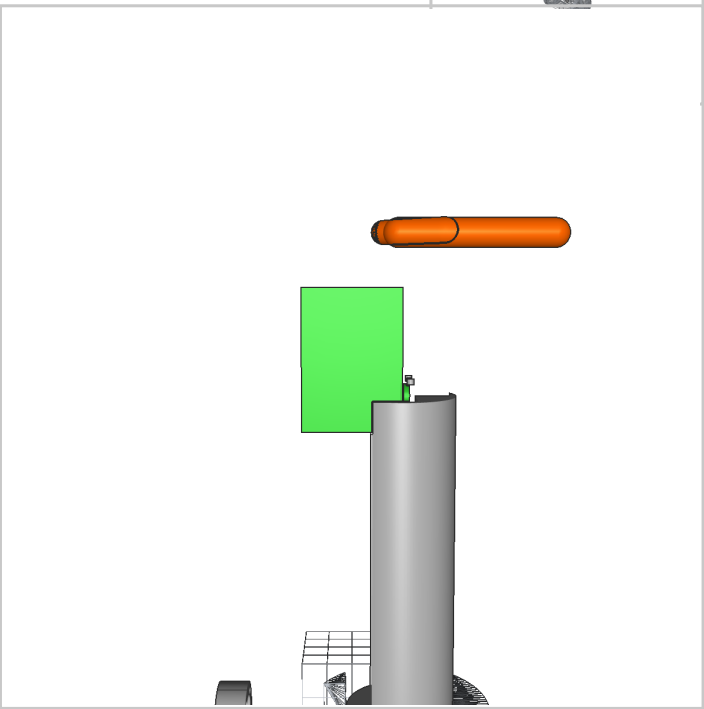

6b. Attach forearm onto horn

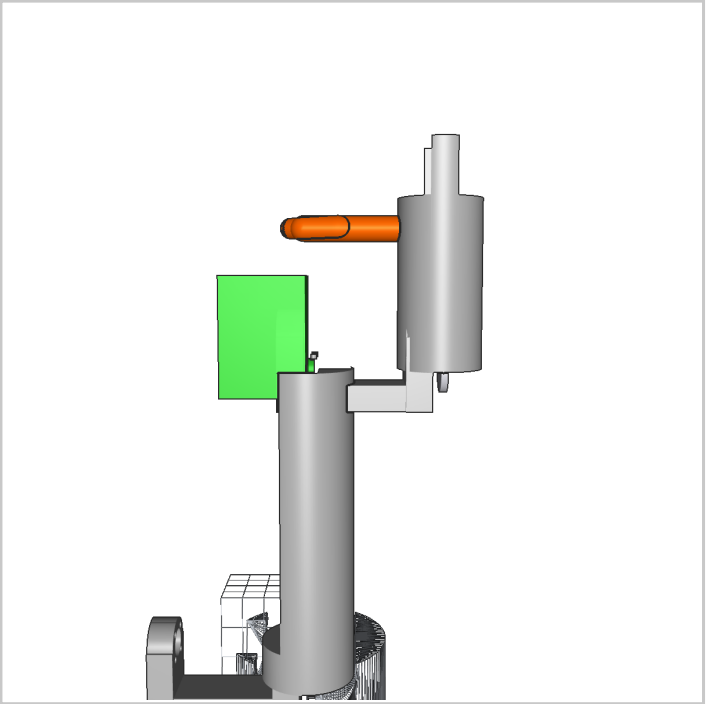

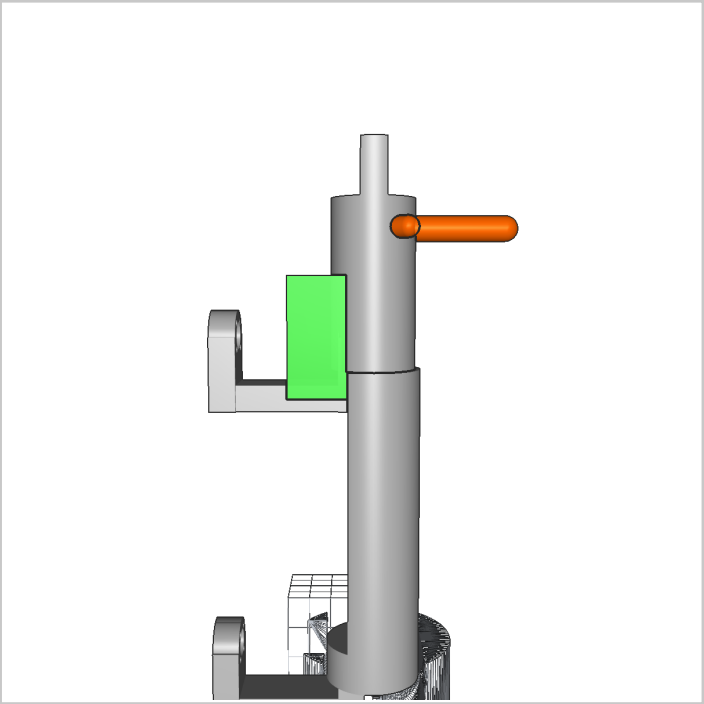

# Step 7

wrist

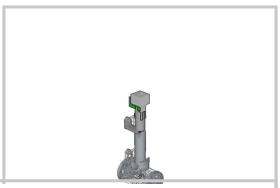

7a. Insert servo into bracket

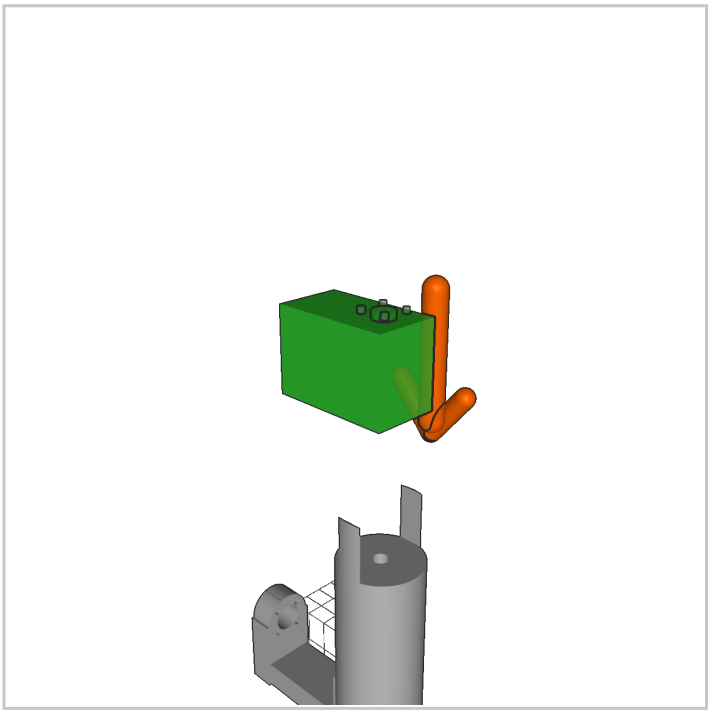

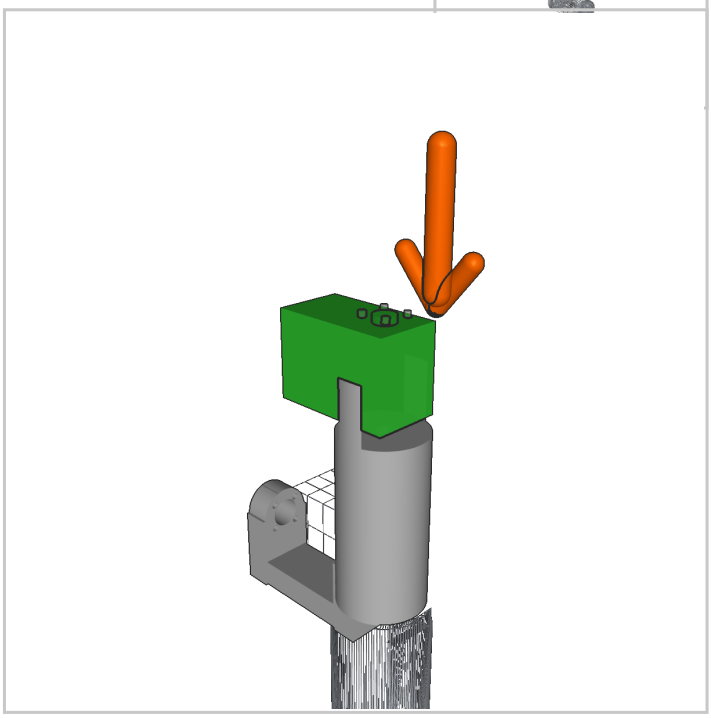

7b. Attach hand onto horn

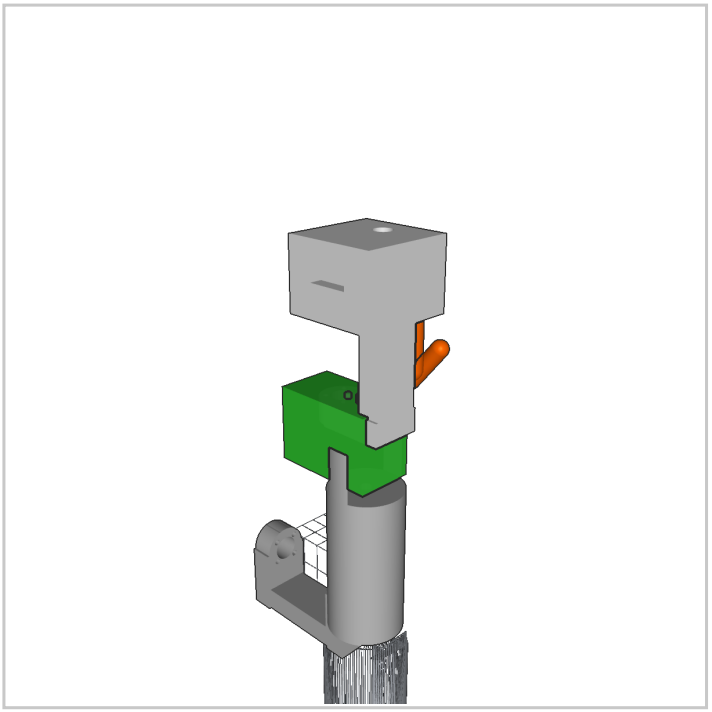

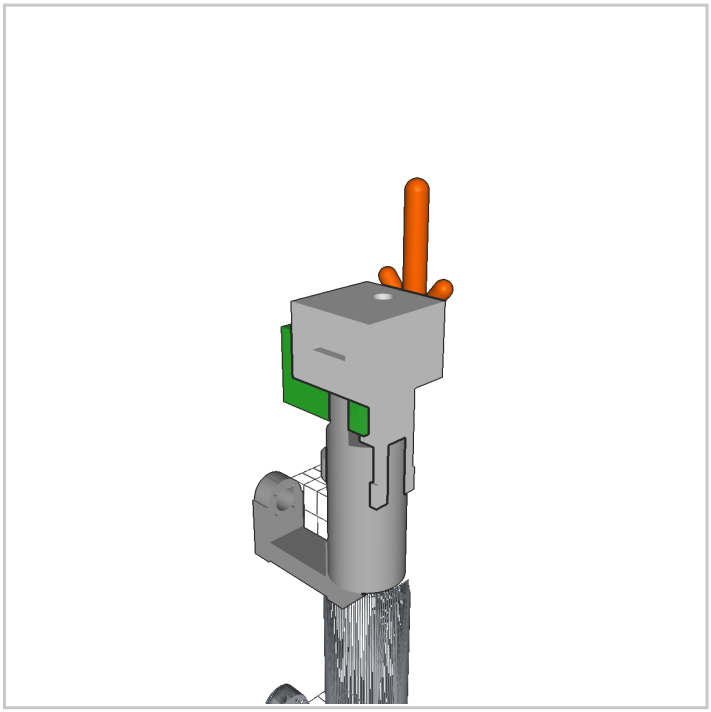

# Step 8

left wheel

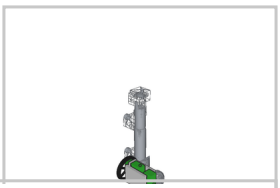

8a. Insert servo into bracket

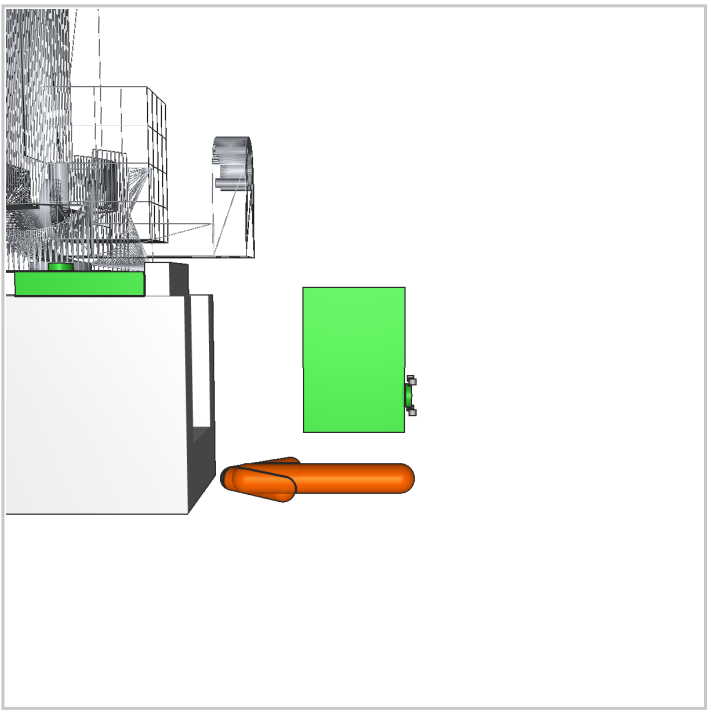

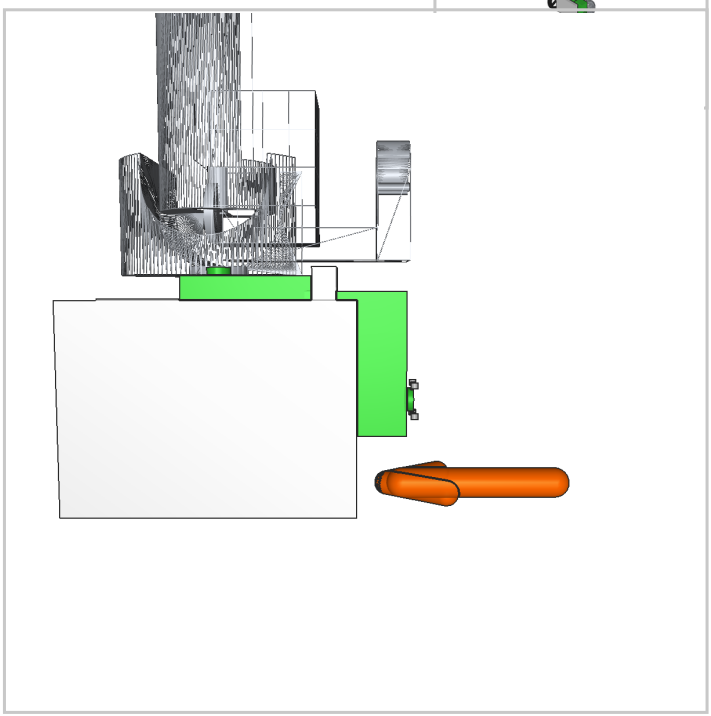

8b. Attach left rim onto horn

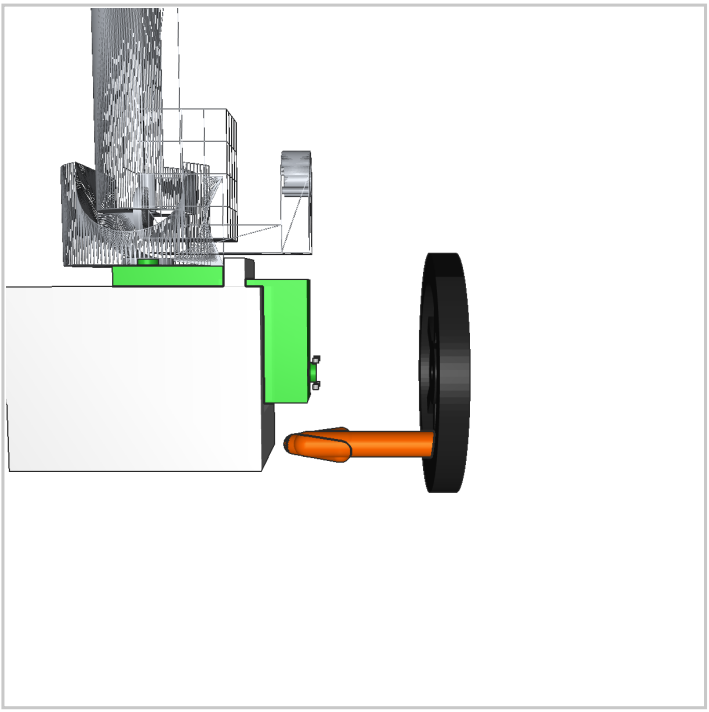

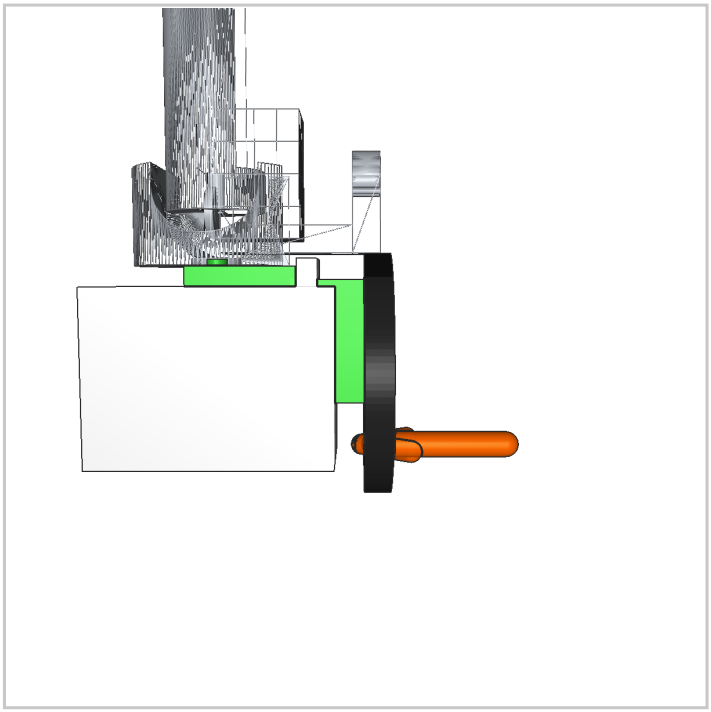

# Step 9

right wheel

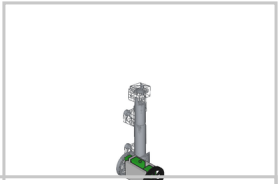

9a. Insert servo into bracket

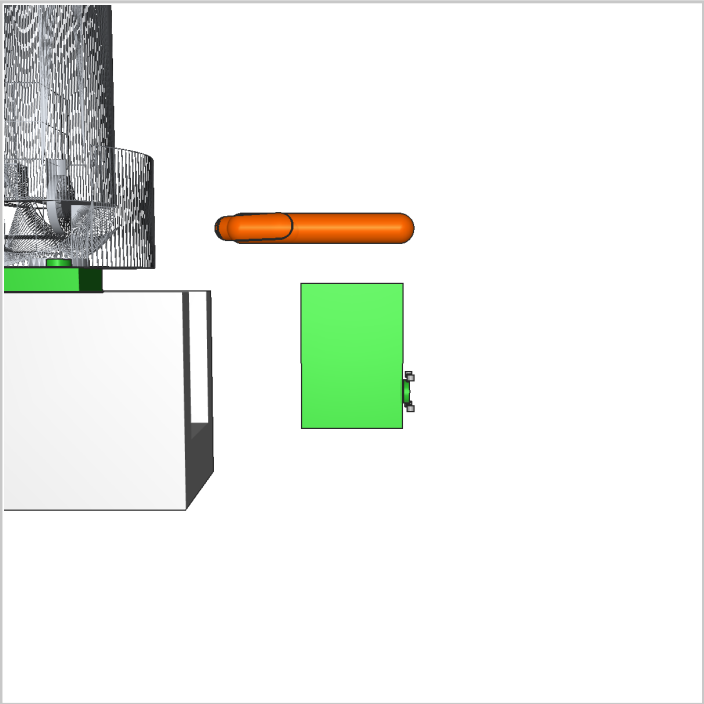

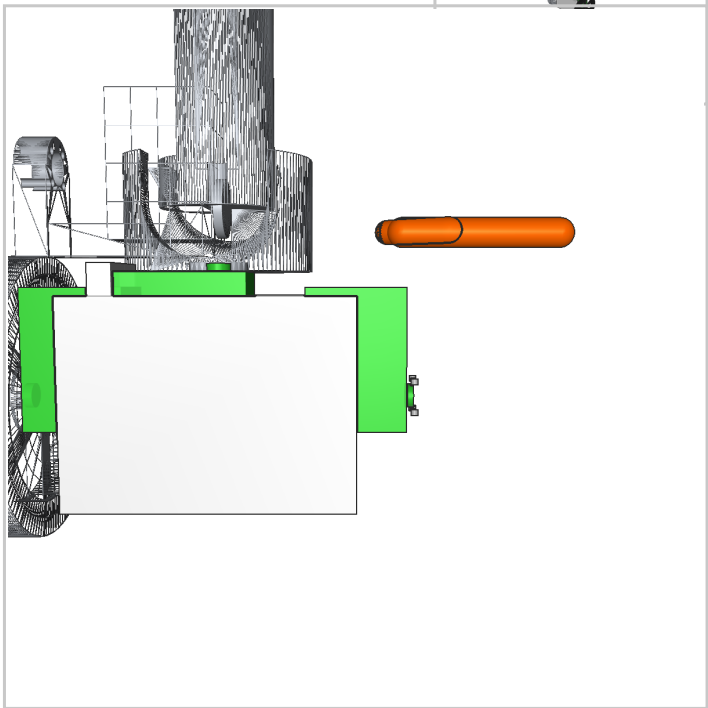
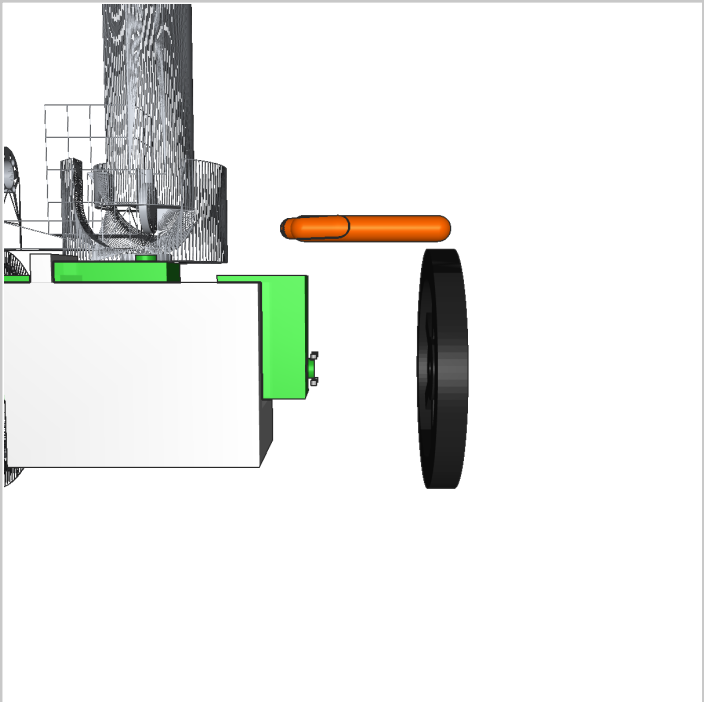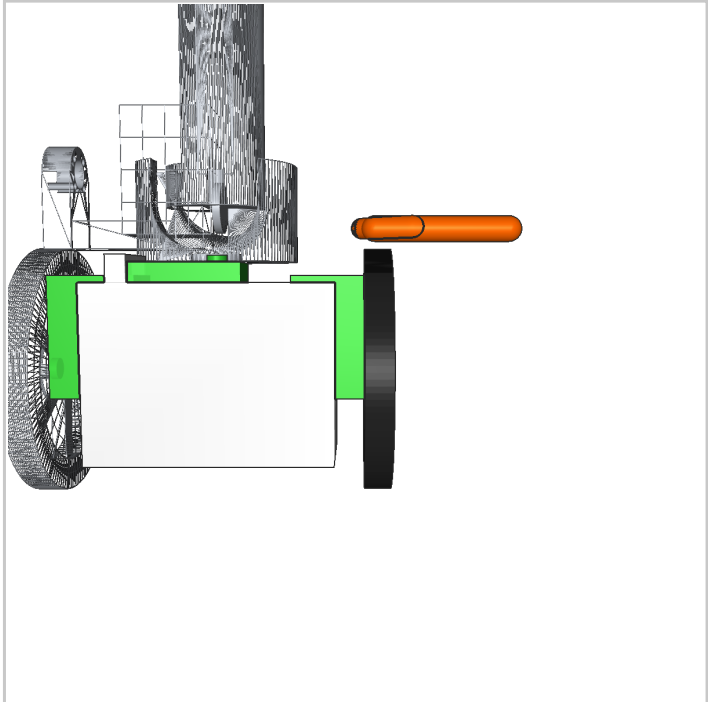
9b. Attach right rim onto horn