wheeler_base

Completed assembly

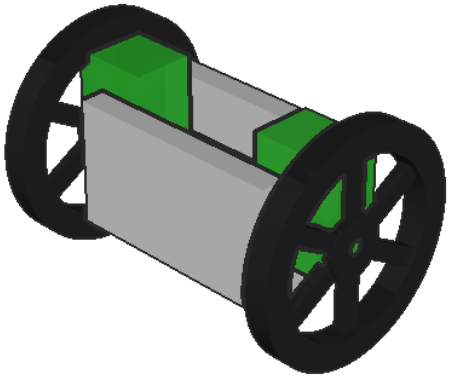

Step 1

pi

1a. Insert pi into pocket

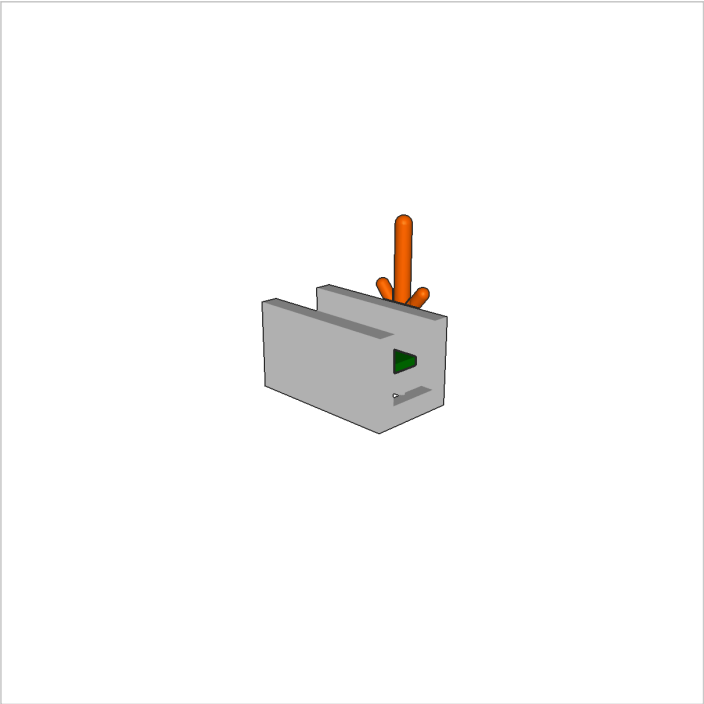

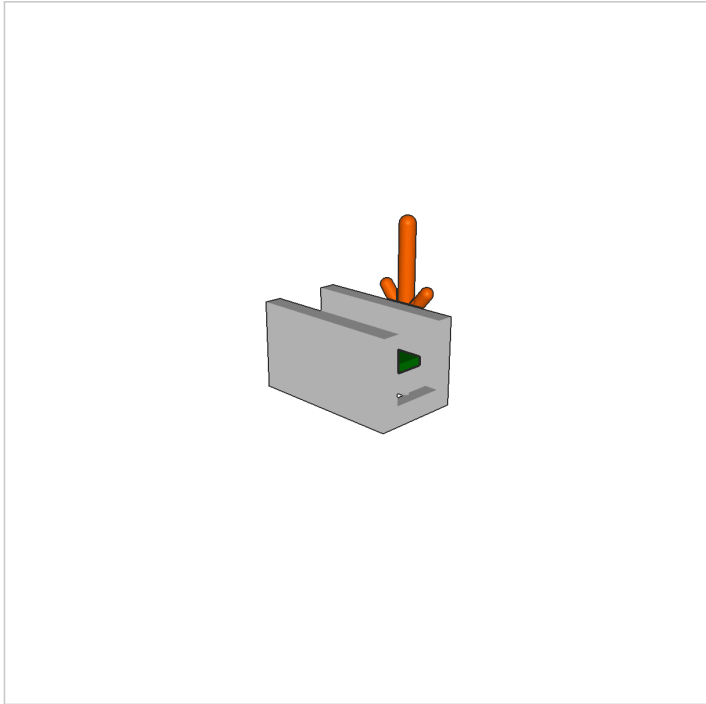

1b. Fasten with screws

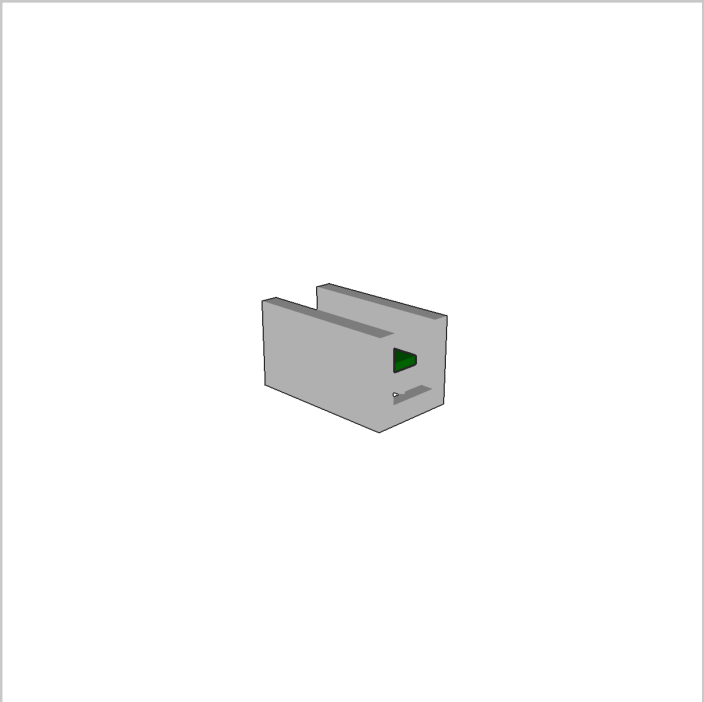

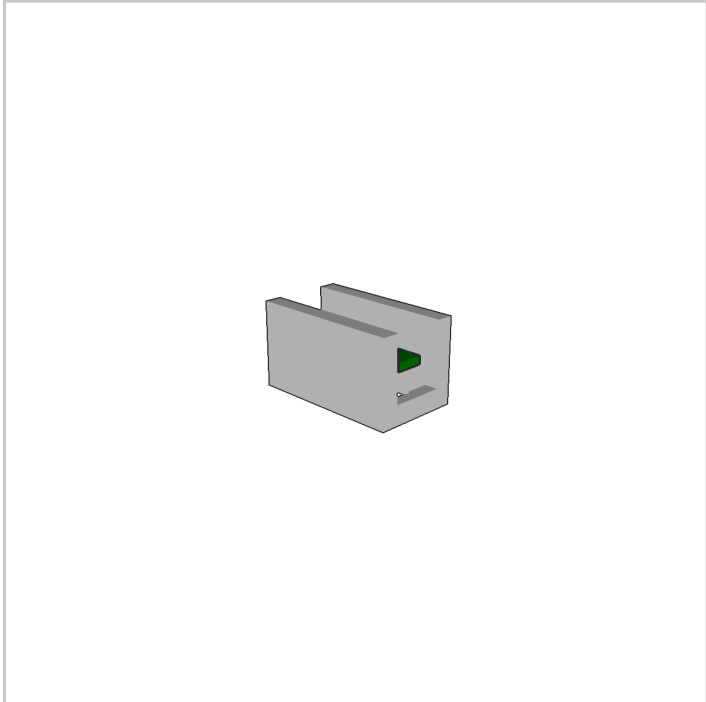

Step 2

battery

2a. Insert battery into pocket

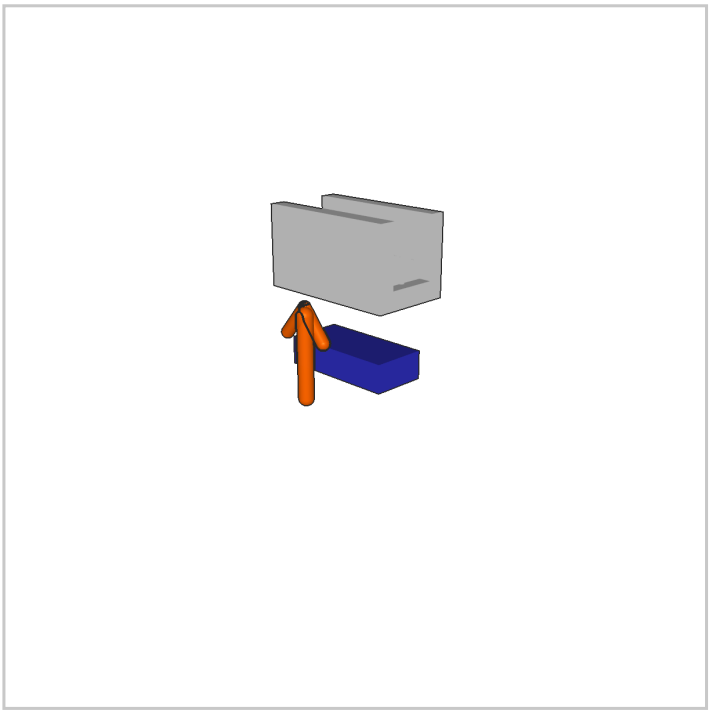

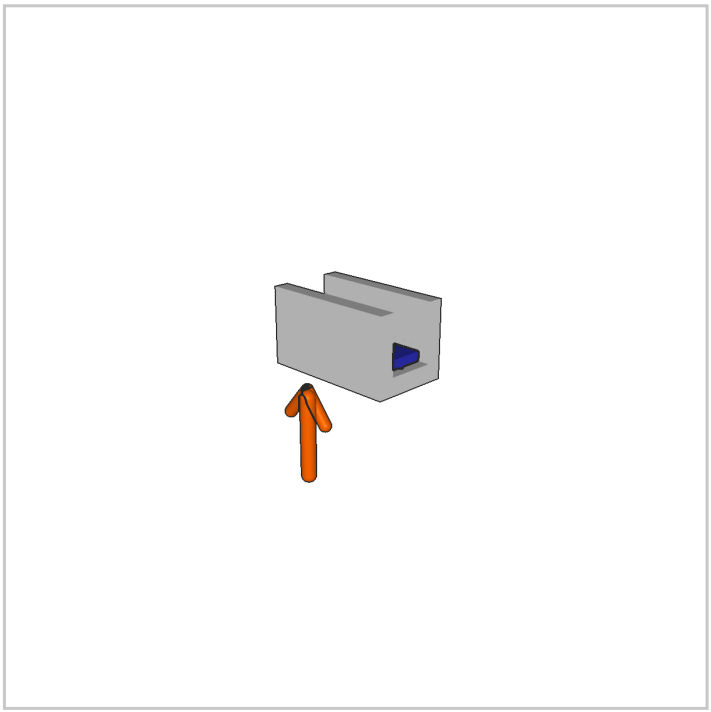

2b. Seat component

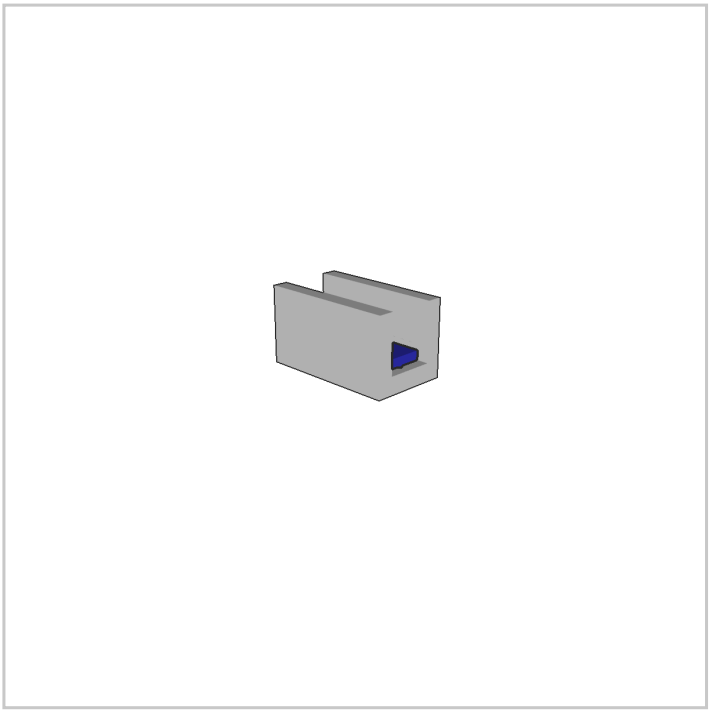

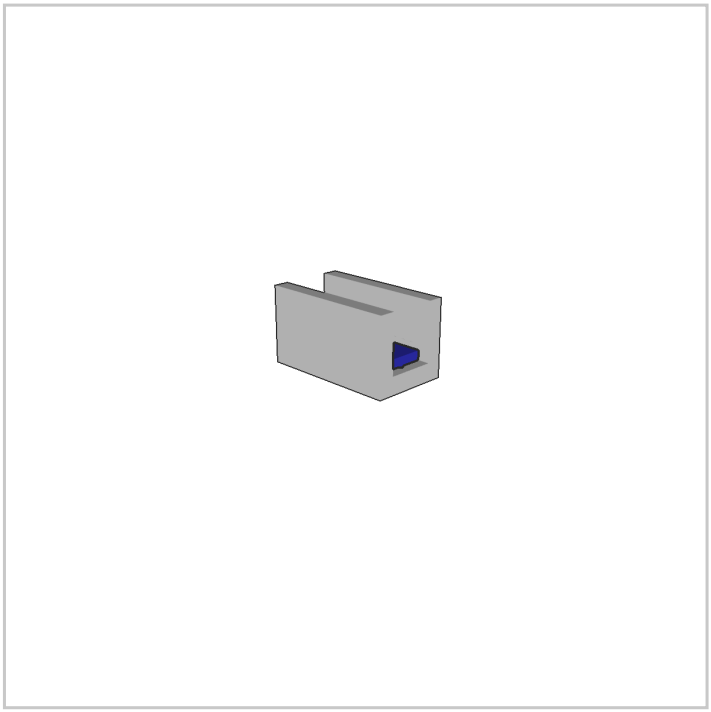

Step 3

left wheel

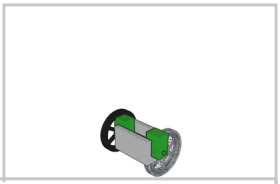

3a. Insert servo into bracket

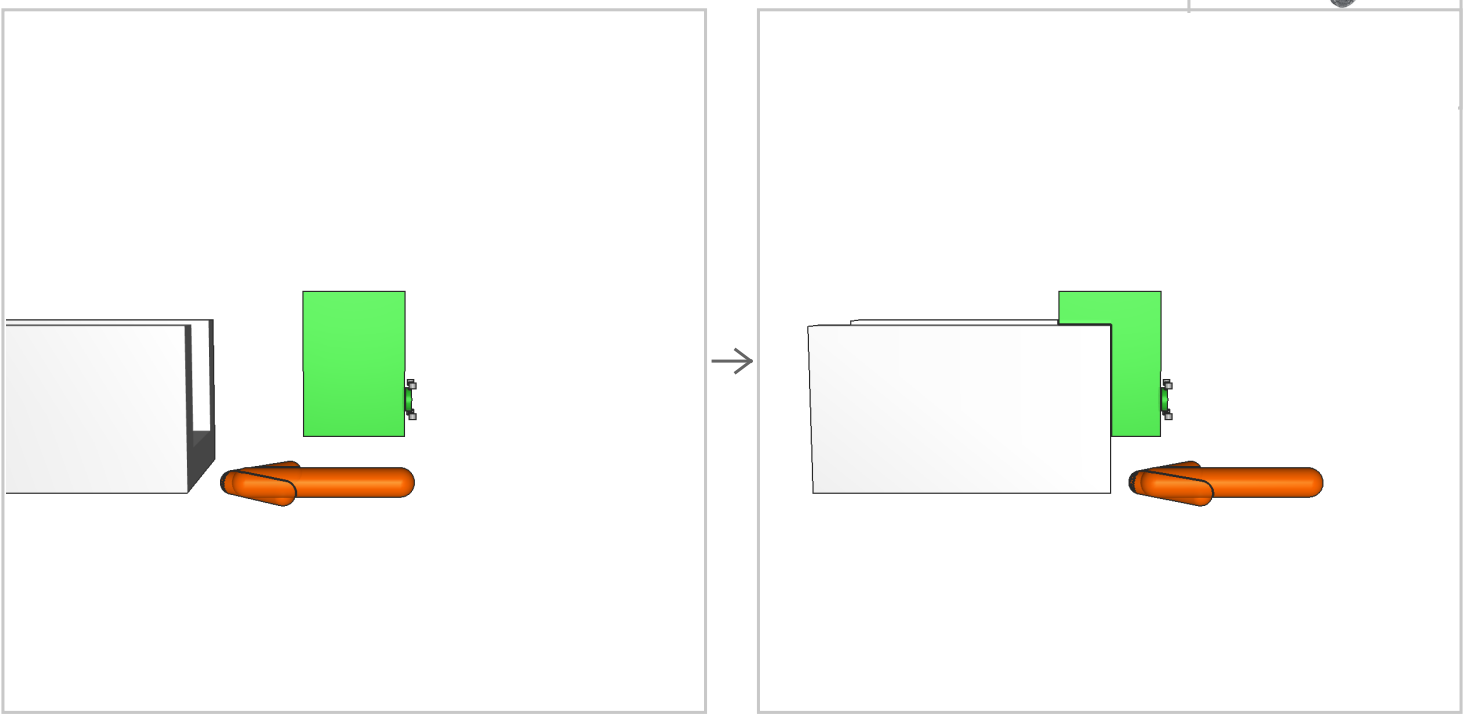

3b. Attach left rim onto horn

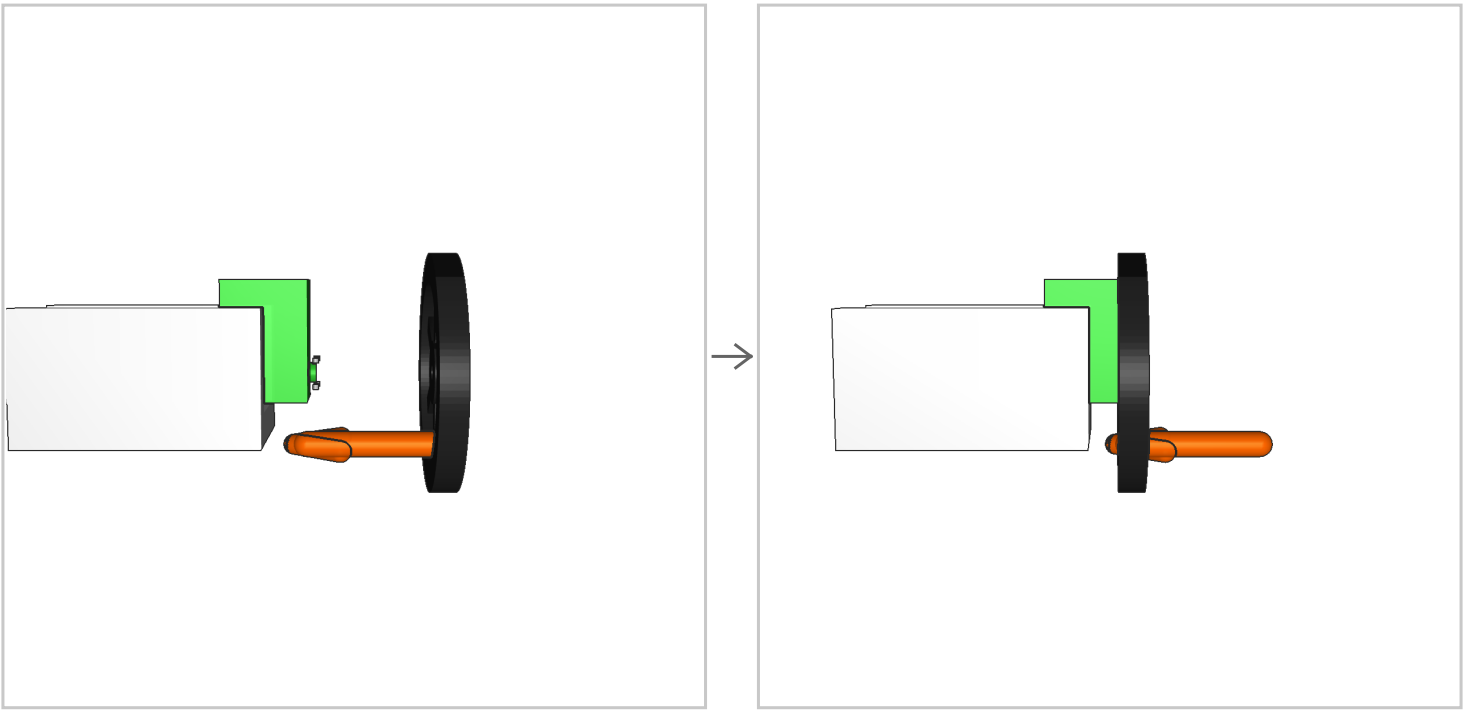

Step 4

right wheel

4a. Insert servo into bracket

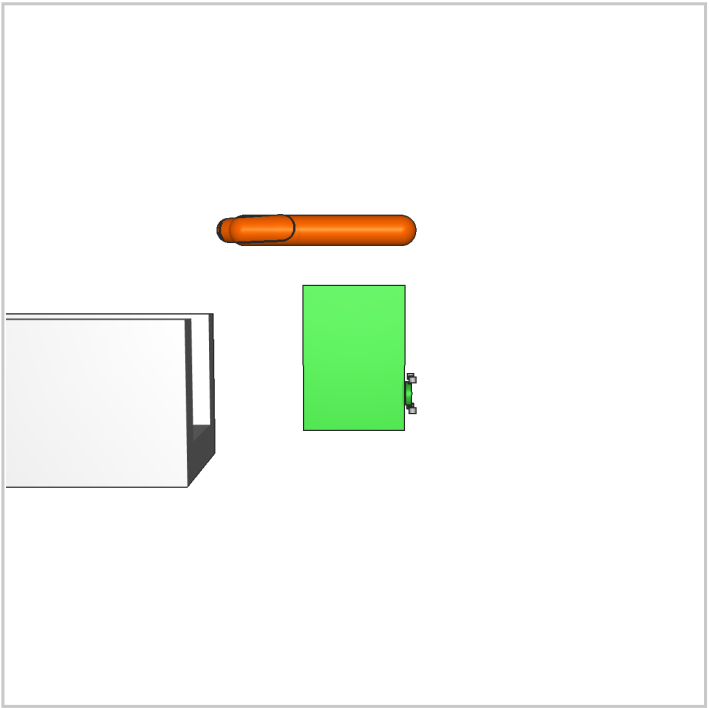

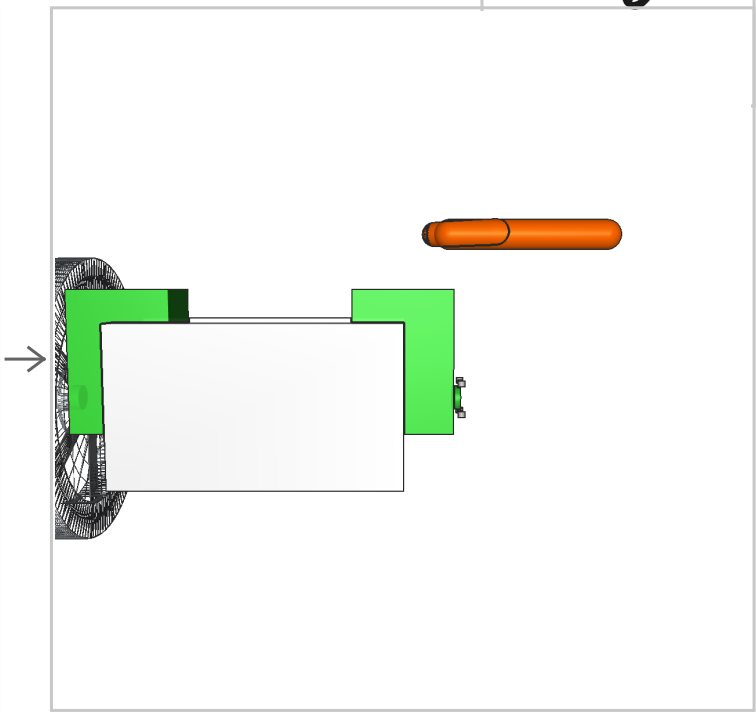
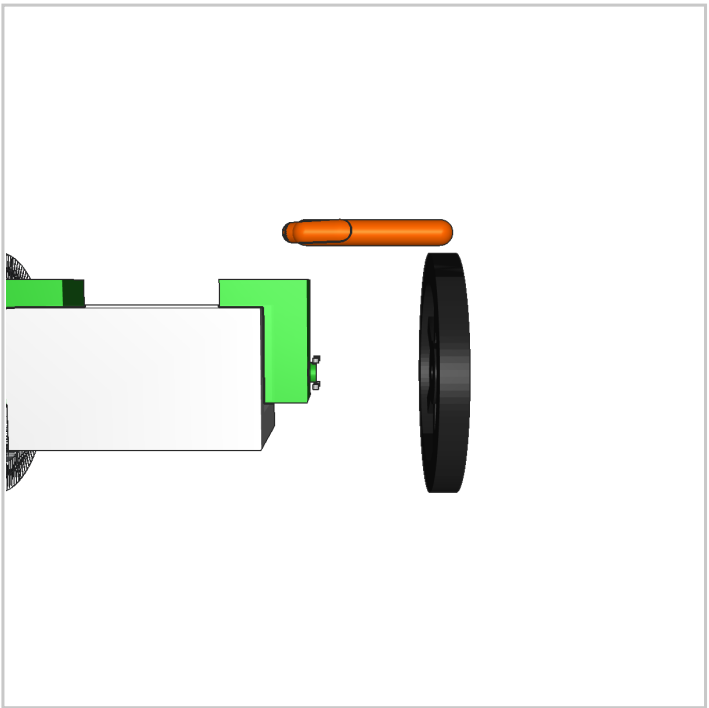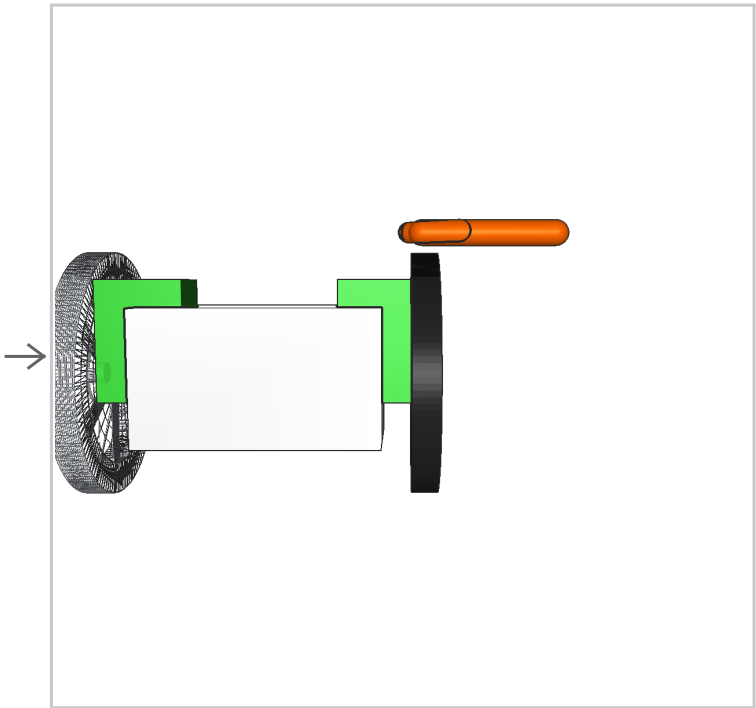
4b. Attach right rim onto horn