so101_arm

Completed assembly

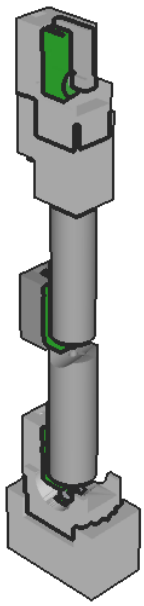

Step 1

pi

1a. Insert pi into pocket

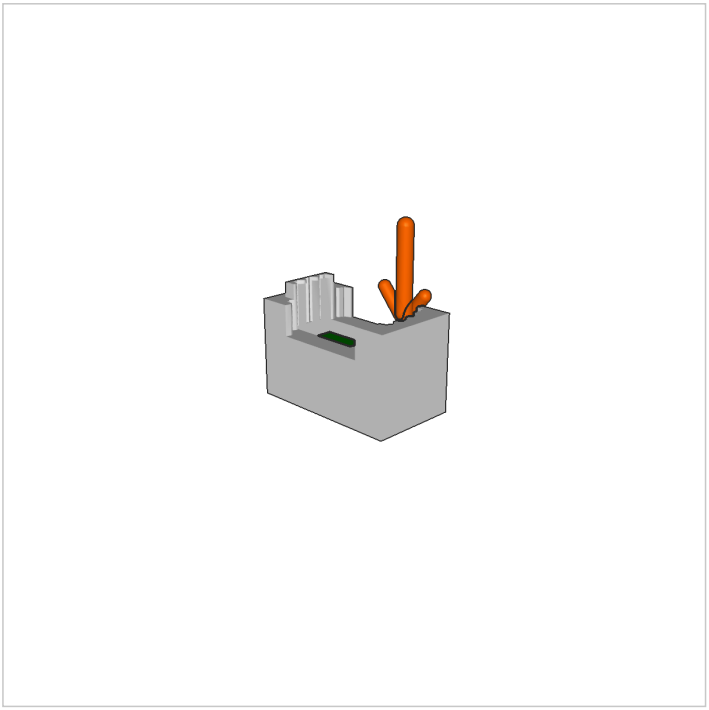

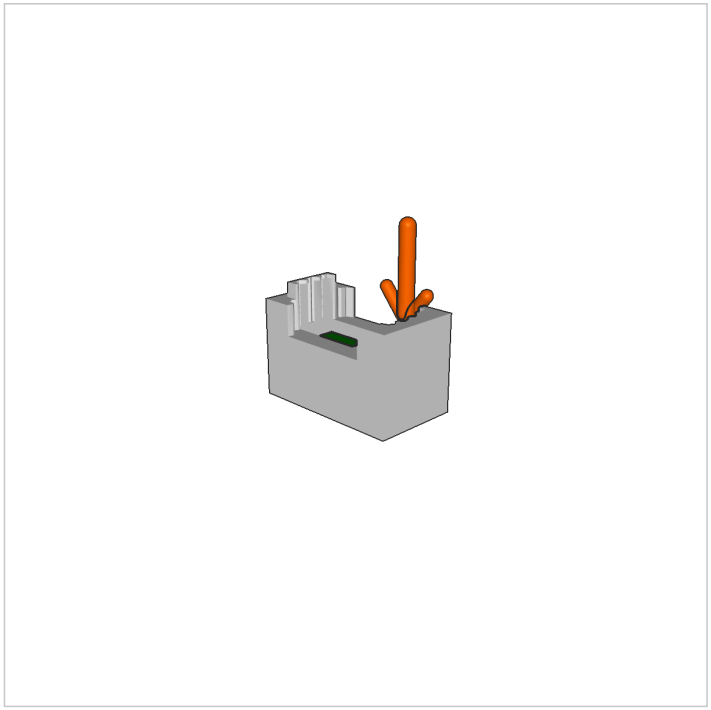

1b. Fasten with screws

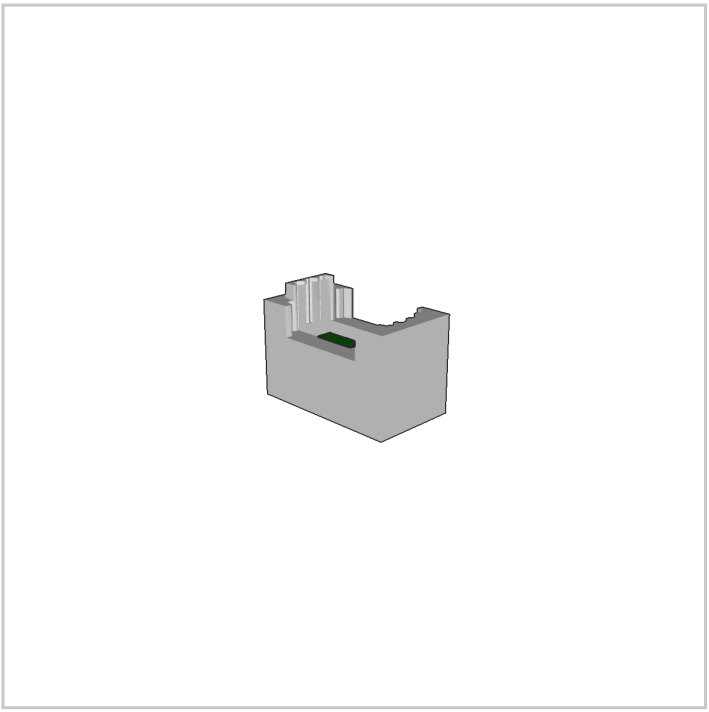

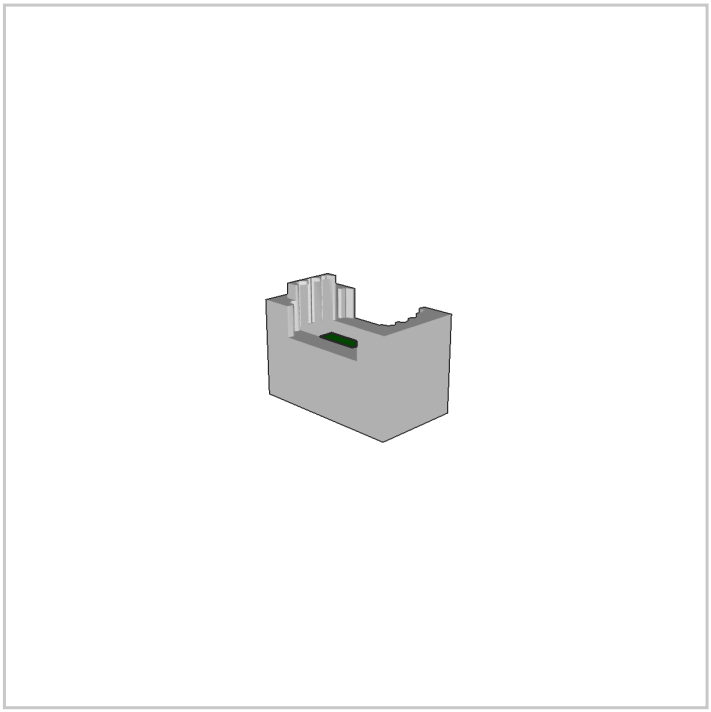

Step 2

battery

2a. Insert battery into pocket

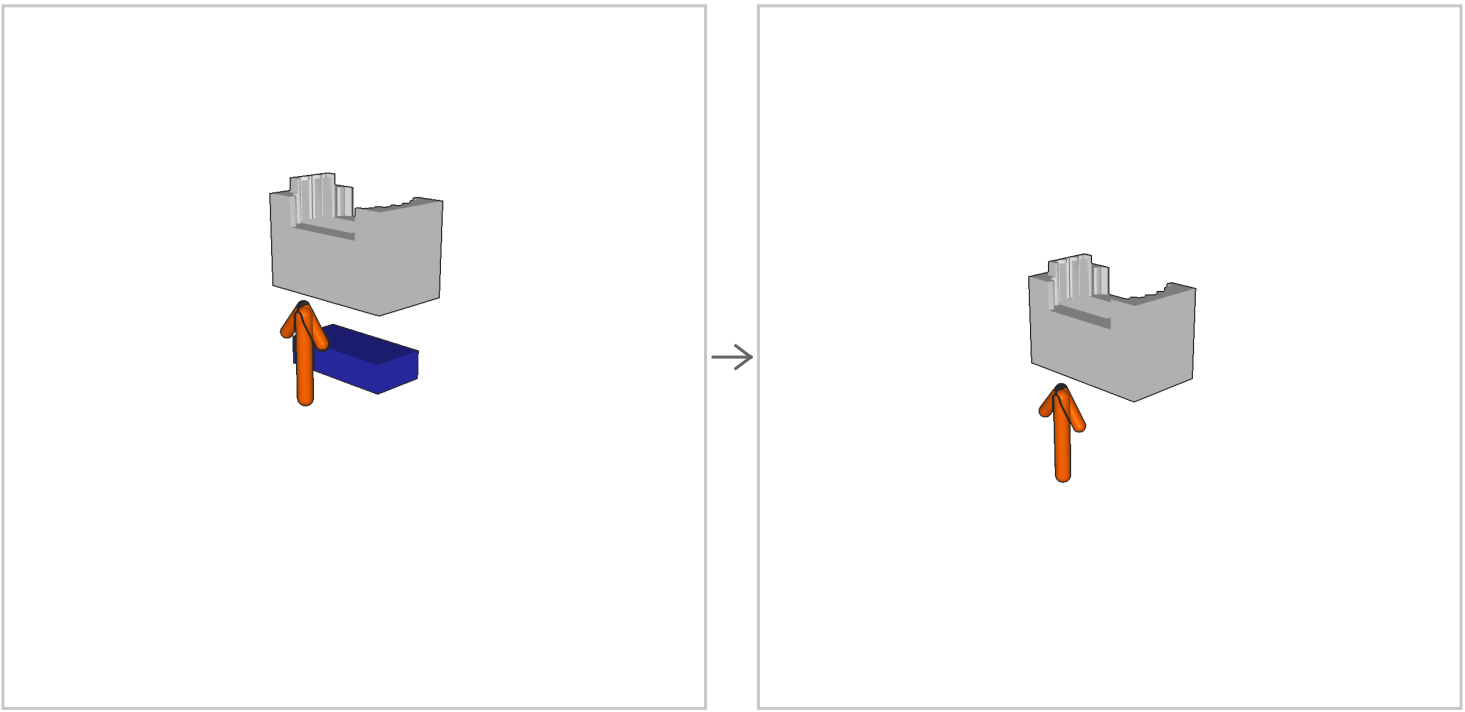

2b. Seat component

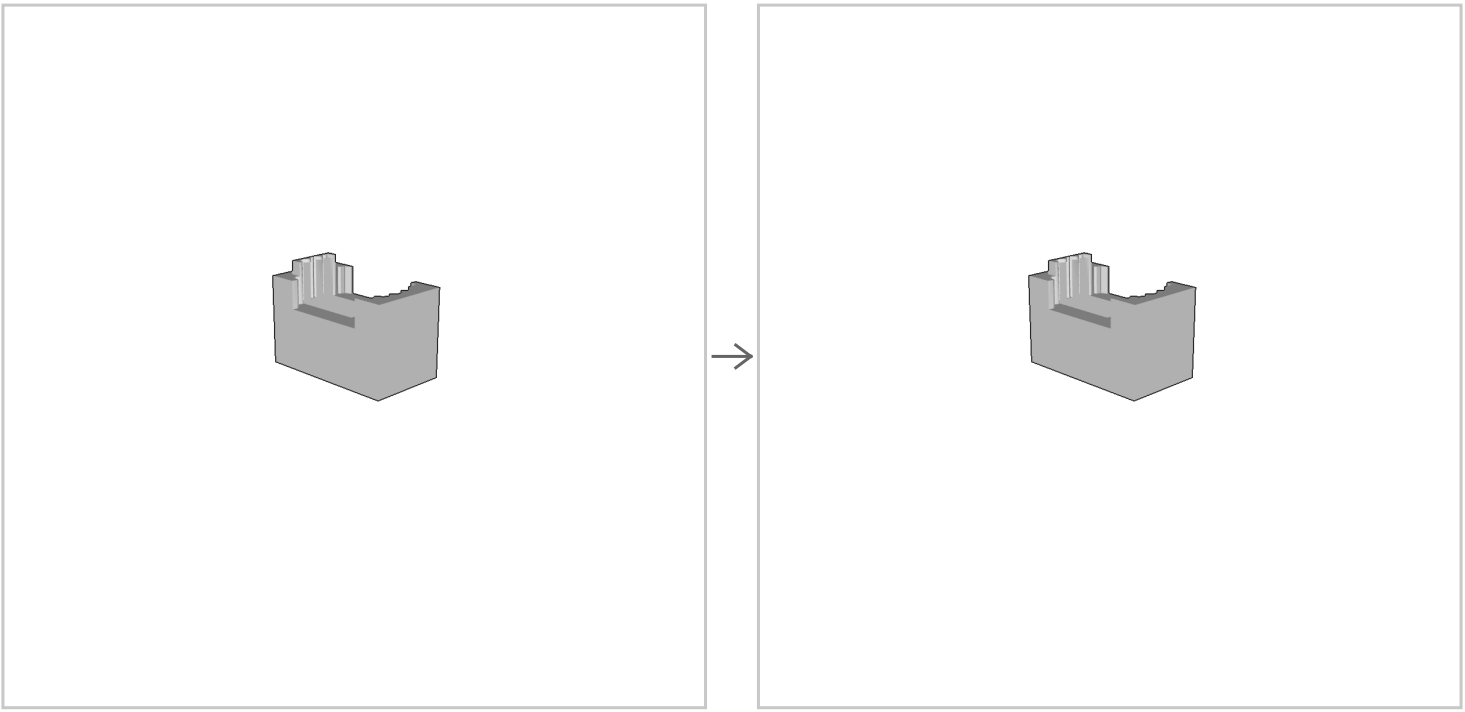

Step 3

roll camera

3a. Insert roll_camera into pocket

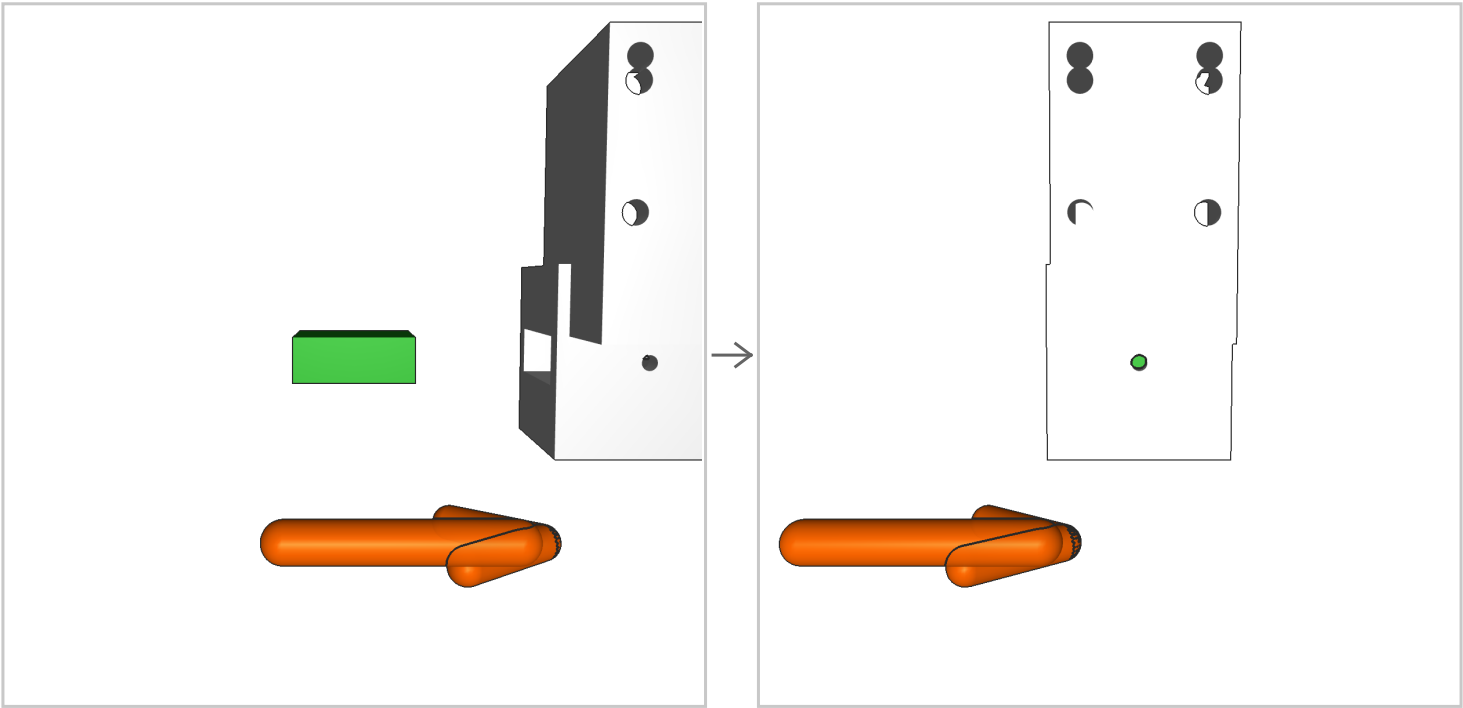

3b. Fasten with screws

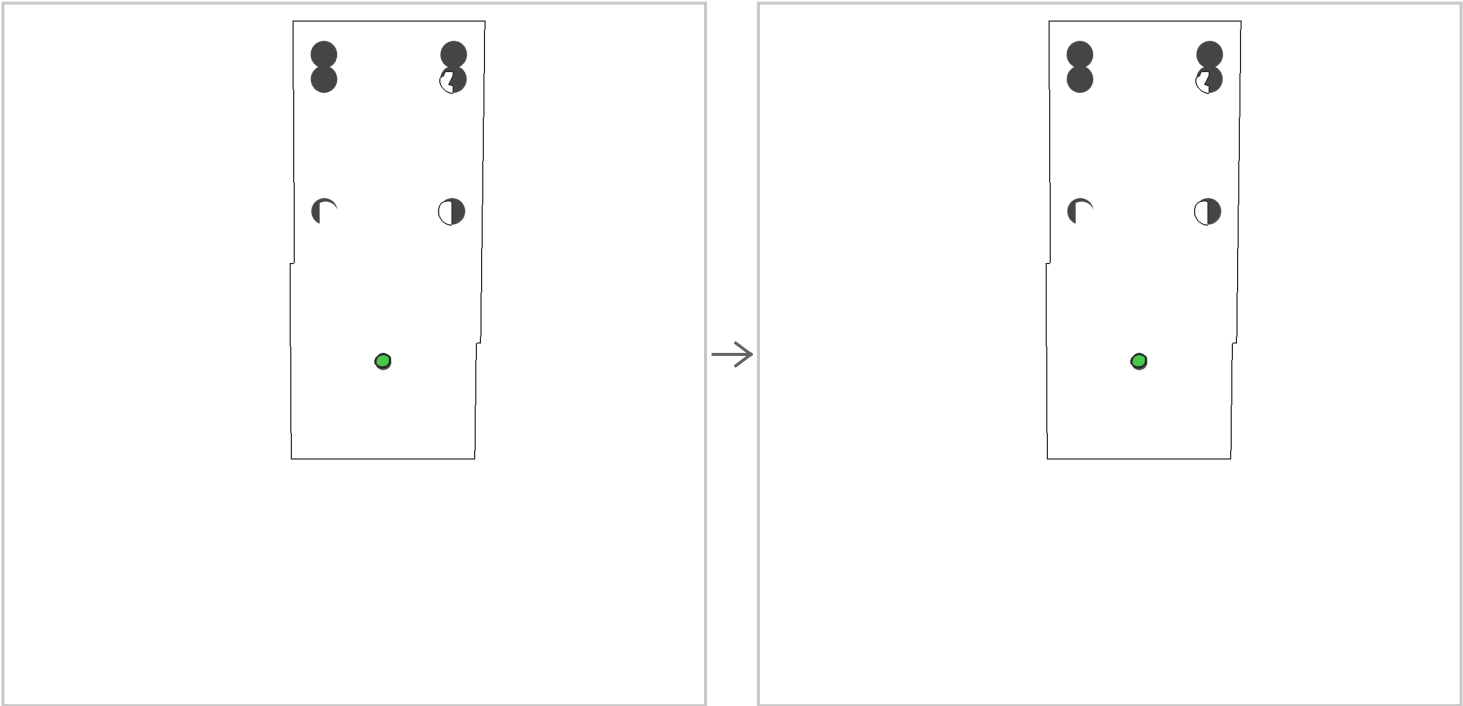

Step 4

shoulder pan

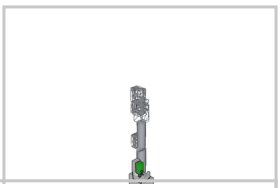

4a. Insert servo into bracket

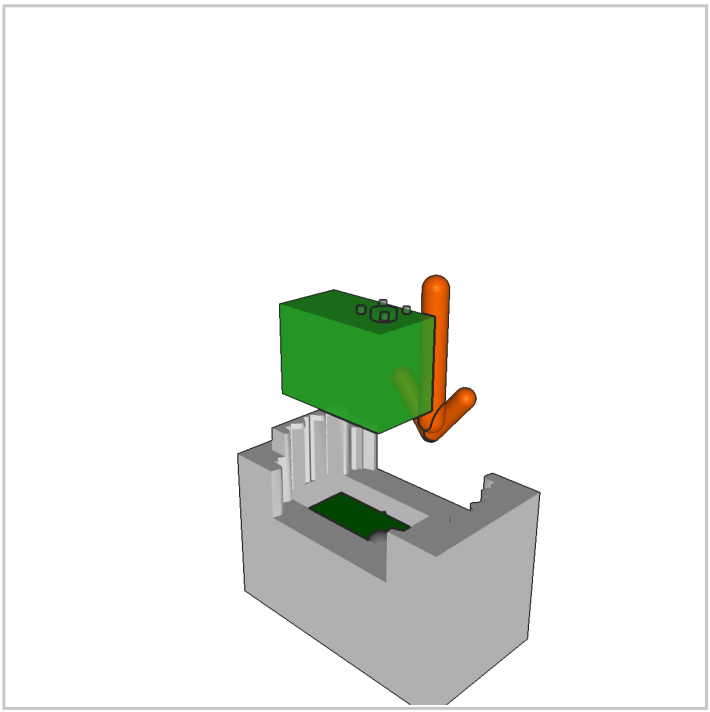

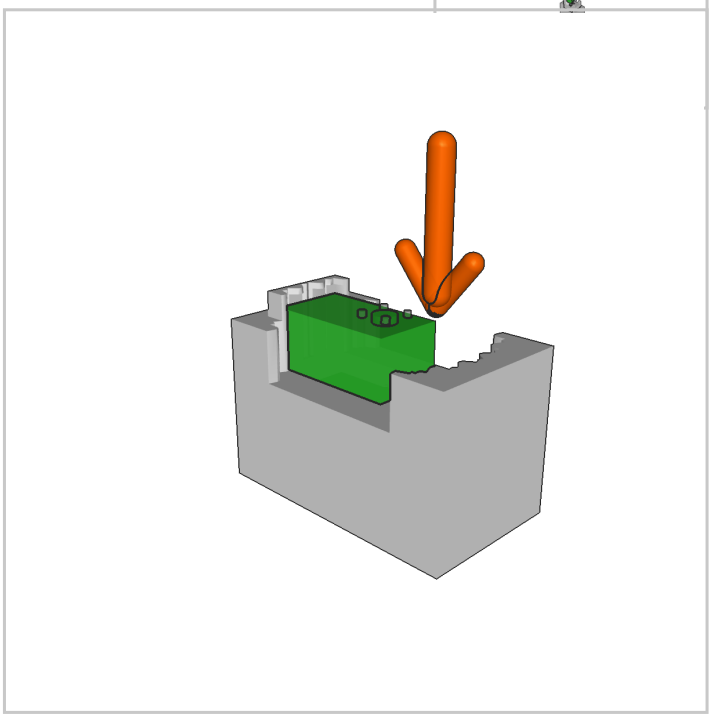

4b. Attach turntable onto horn

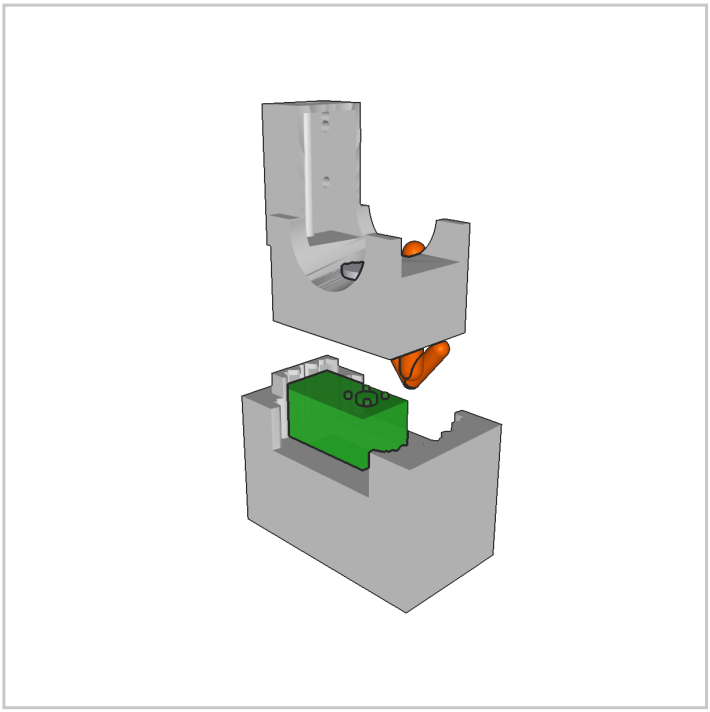

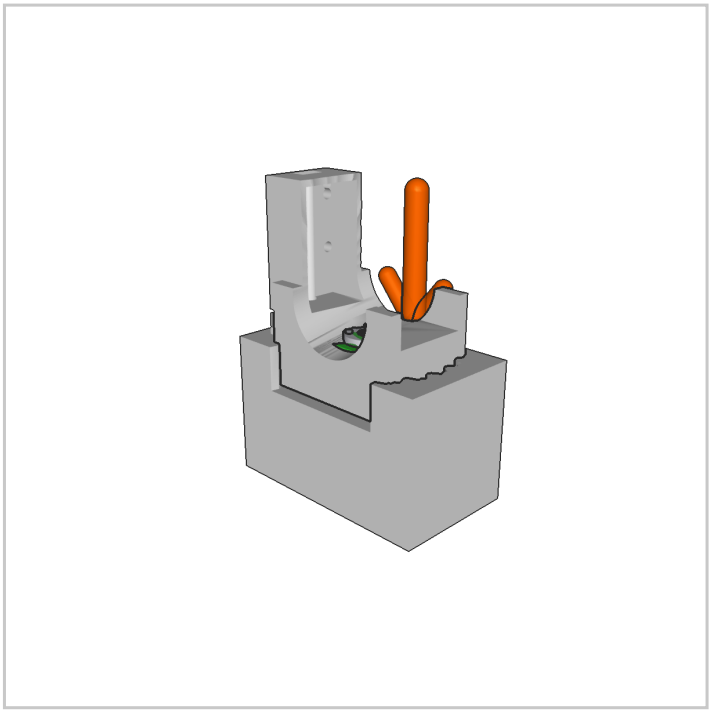

Step 5

shoulder lift

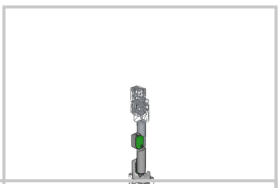

5a. Insert servo into bracket

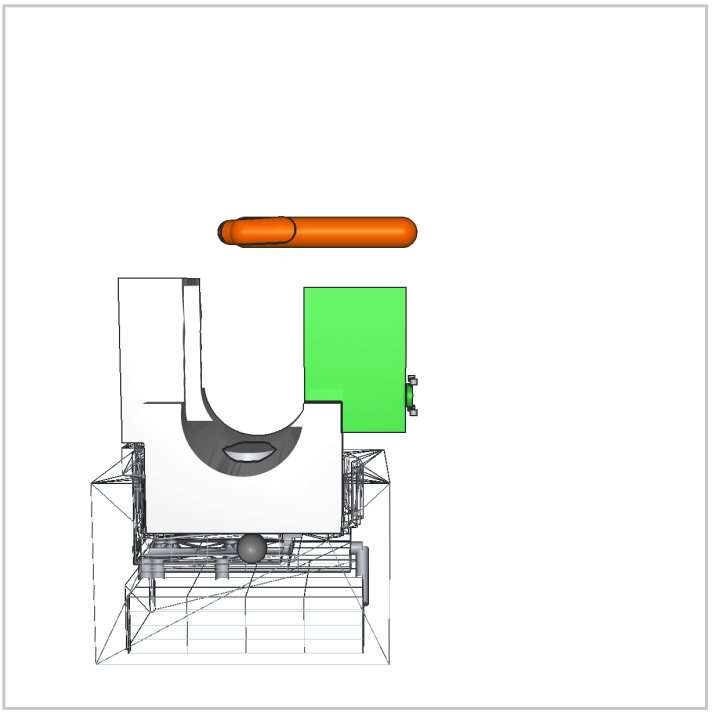

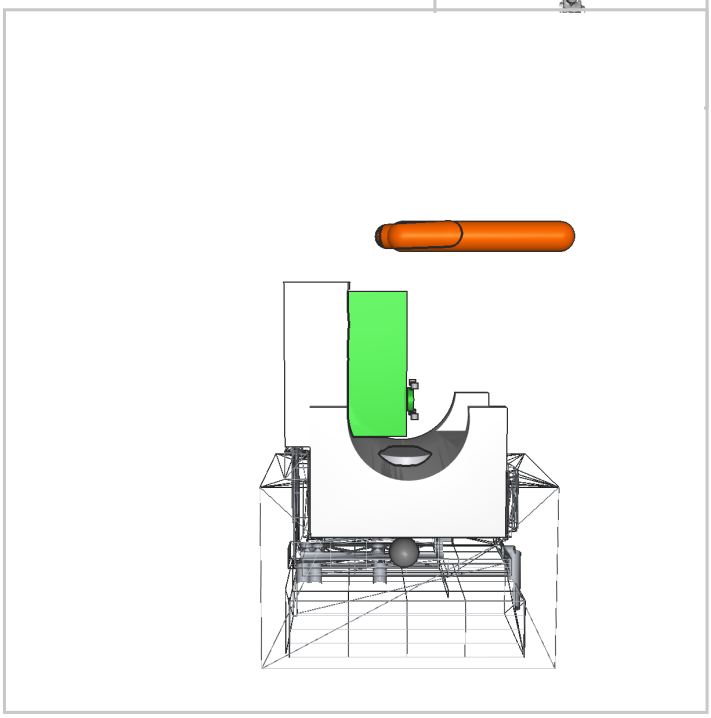

5b. Attach upper arm onto horn

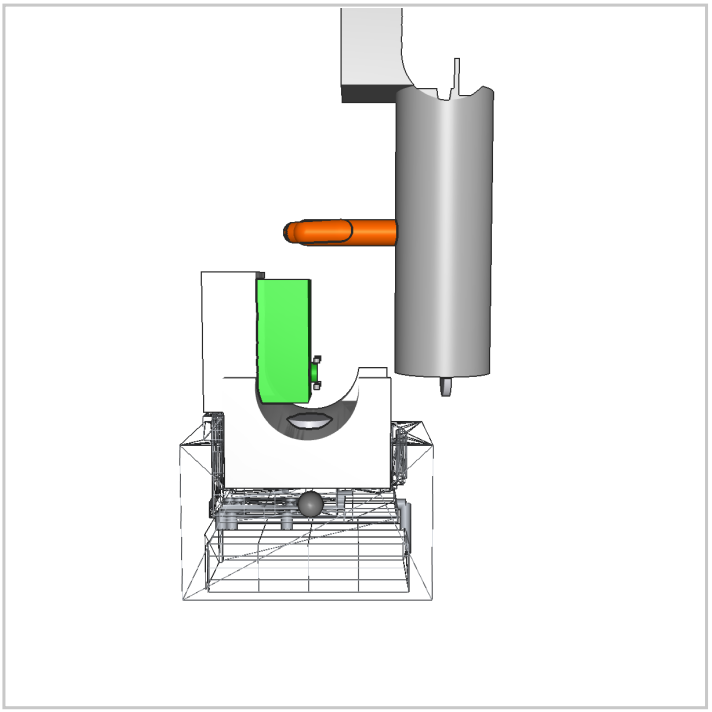

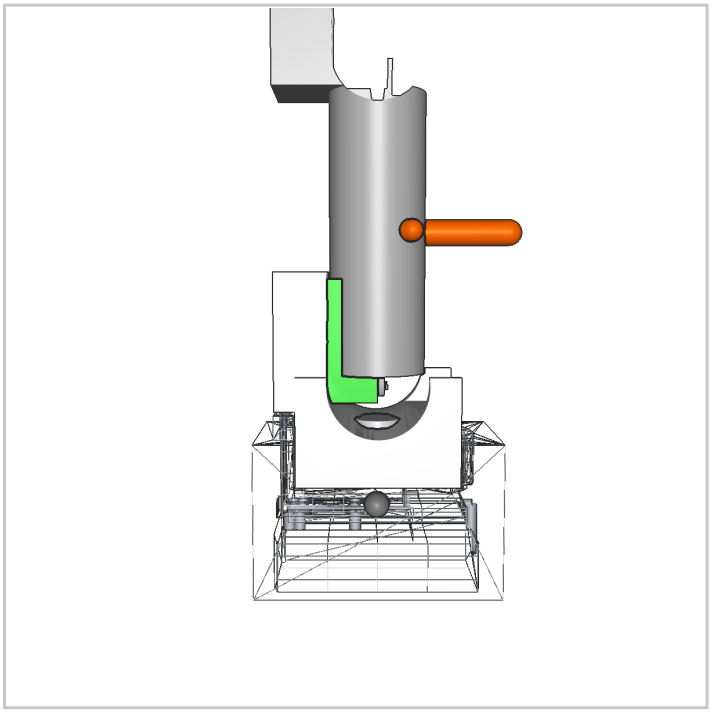

Step 6

elbow flex

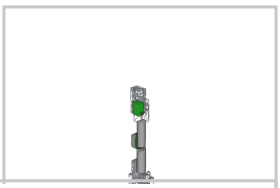

6a. Insert servo into bracket

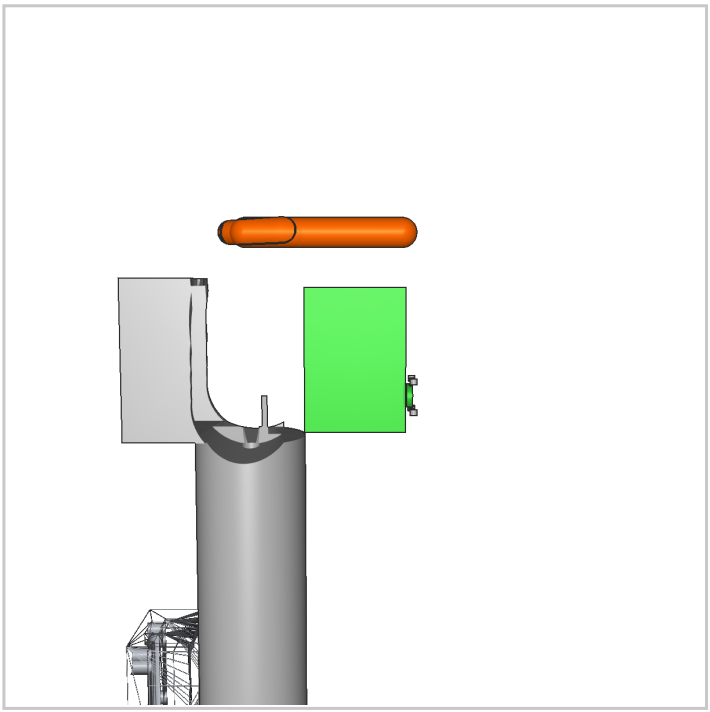

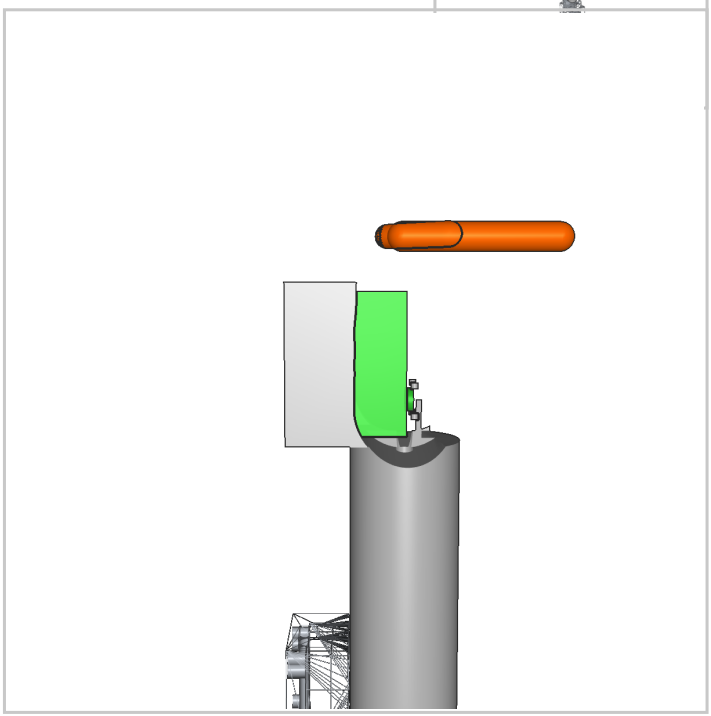

6b. Attach forearm onto horn

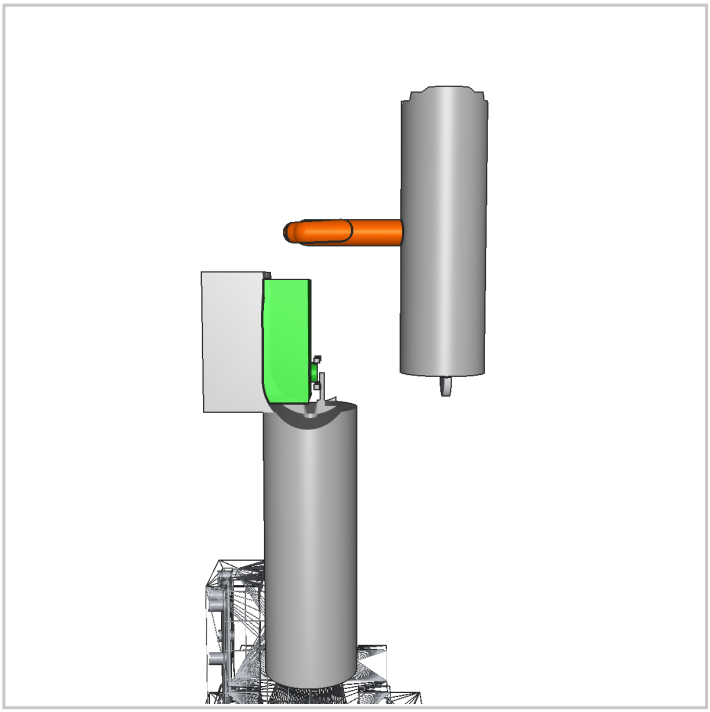

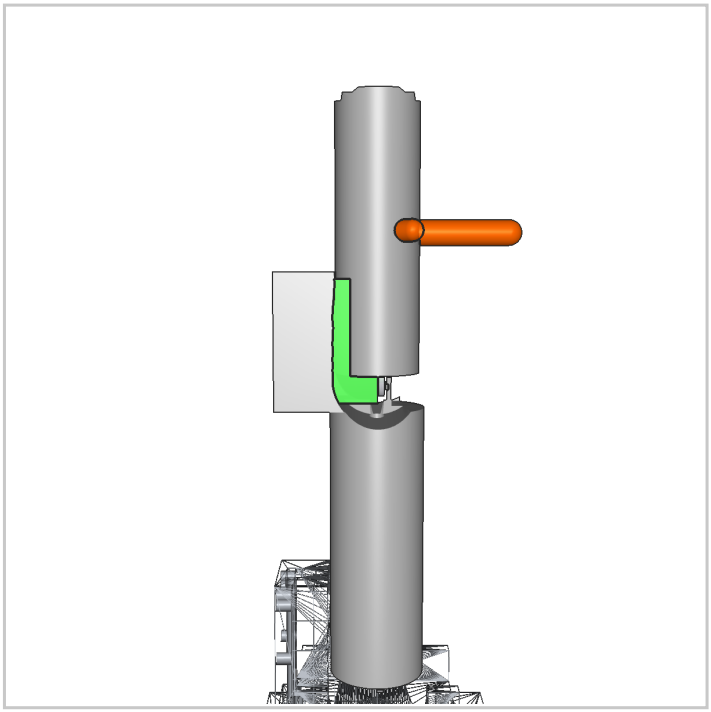

Step 7

wrist flex

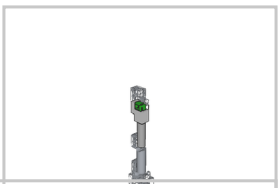

7a. Insert servo into bracket

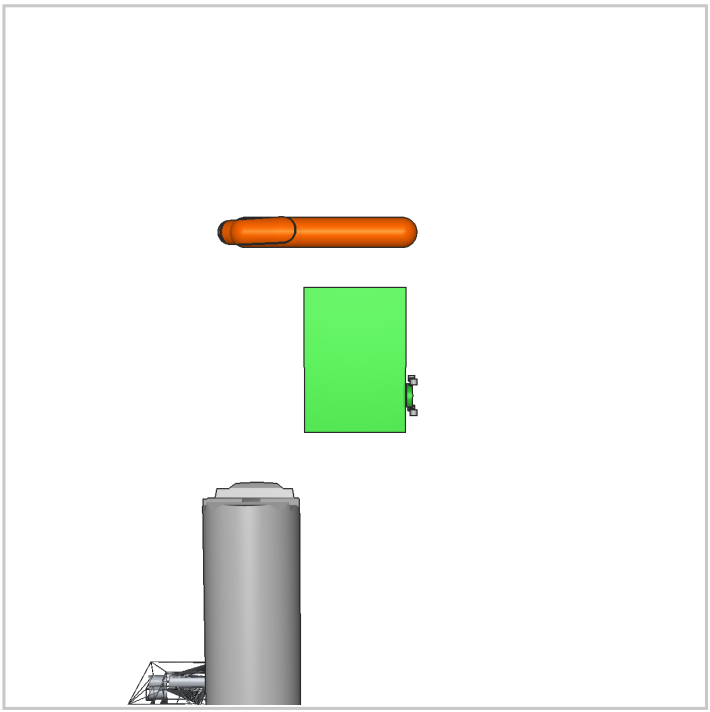

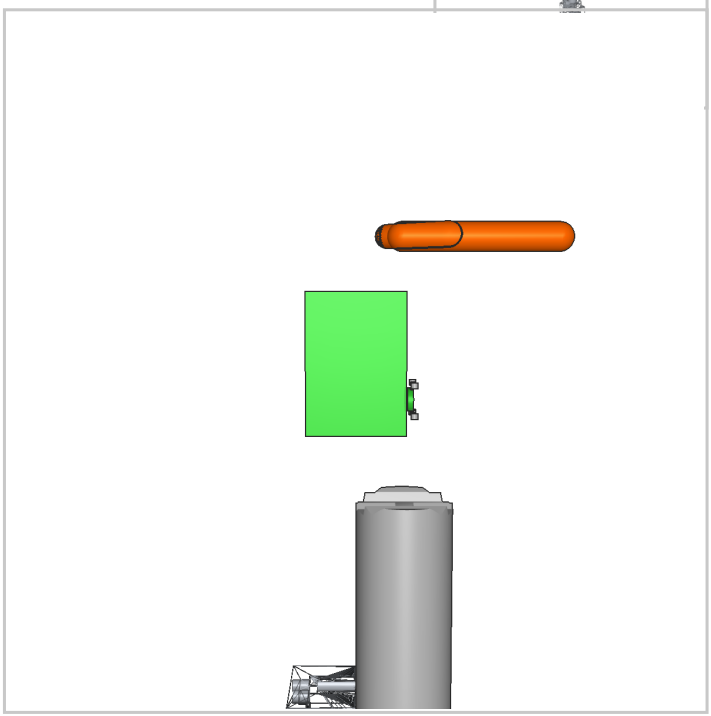

7b. Attach wrist onto horn

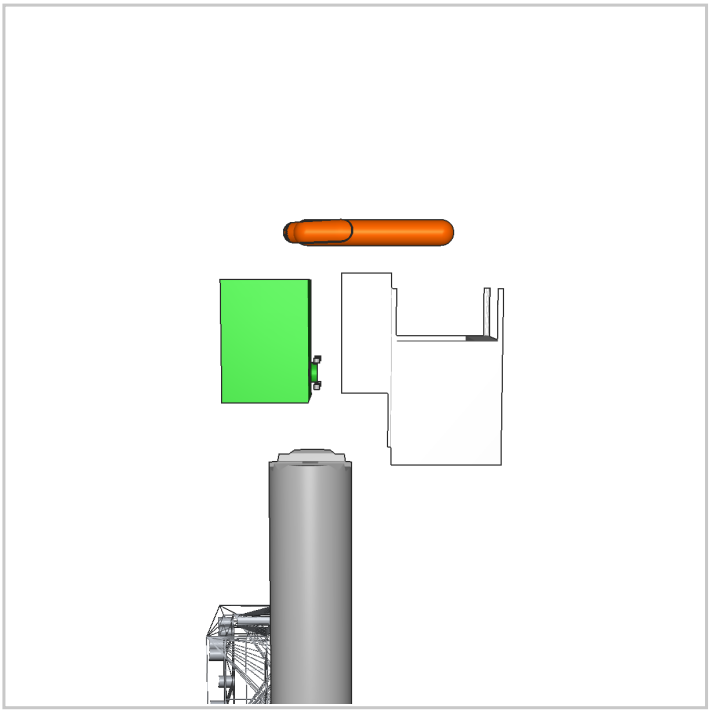

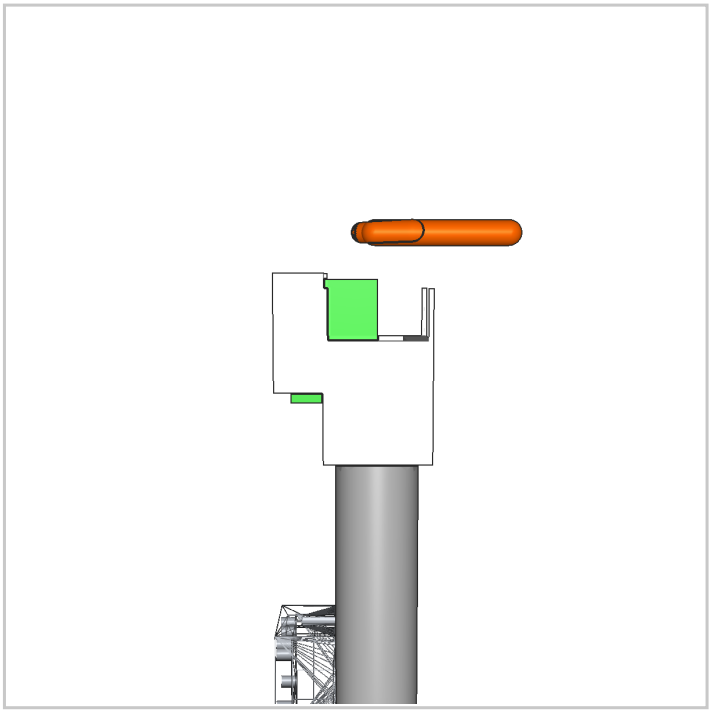

Step 8

wrist roll

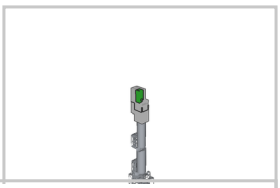

8a. Insert servo into bracket

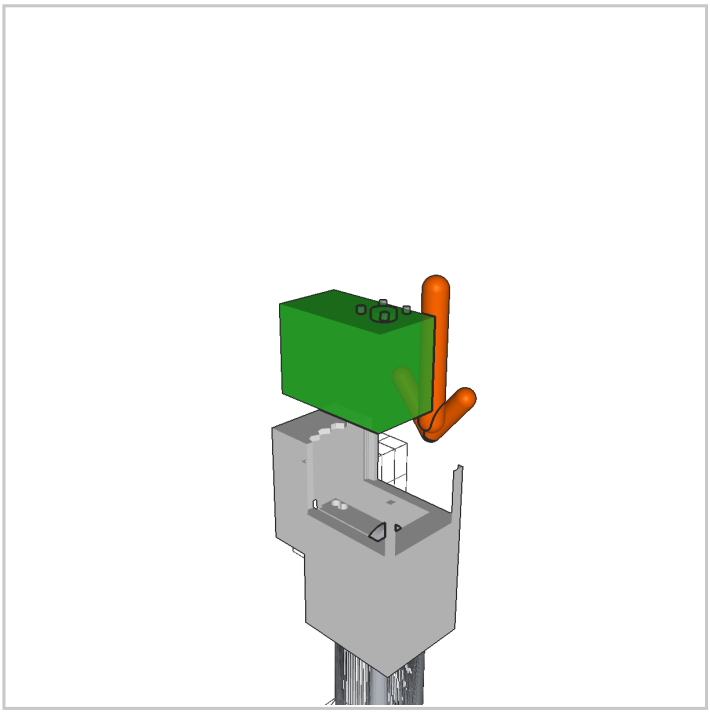

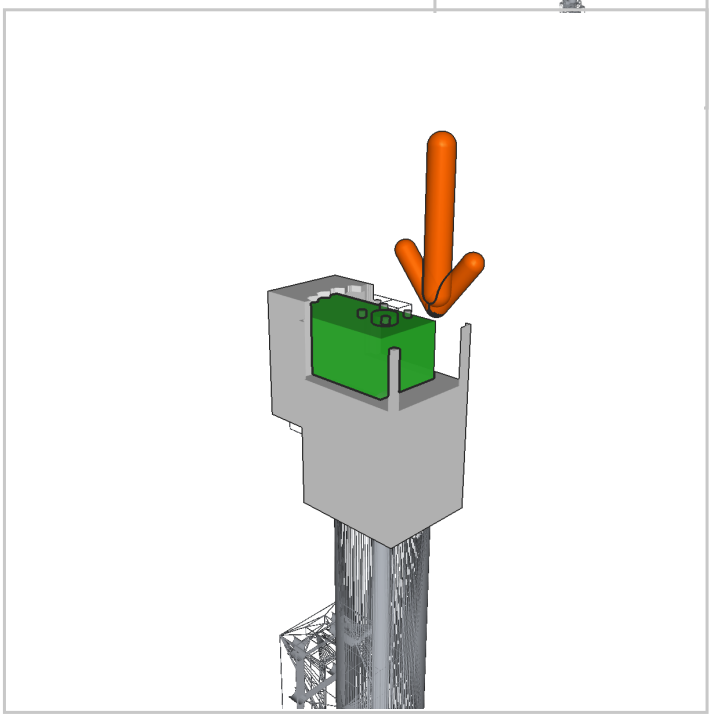

8b. Attach wrist roll onto horn

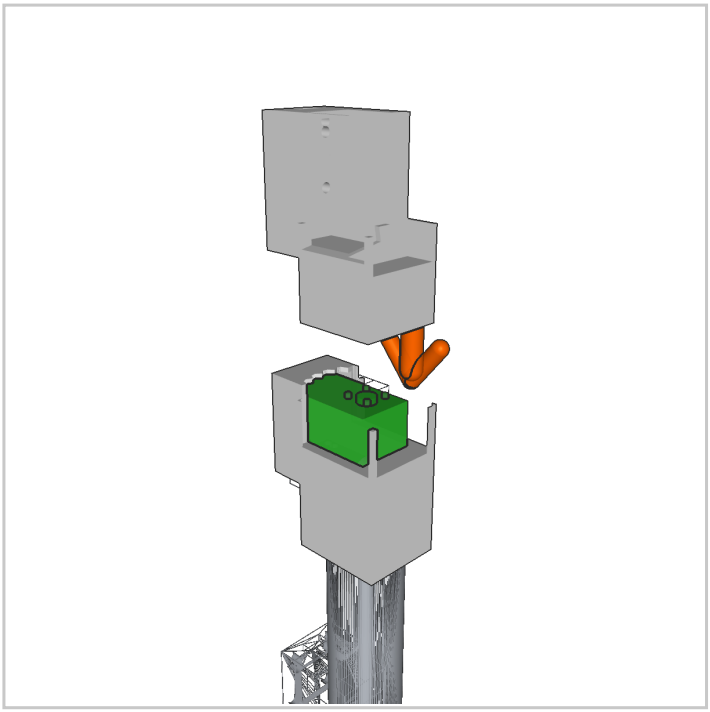

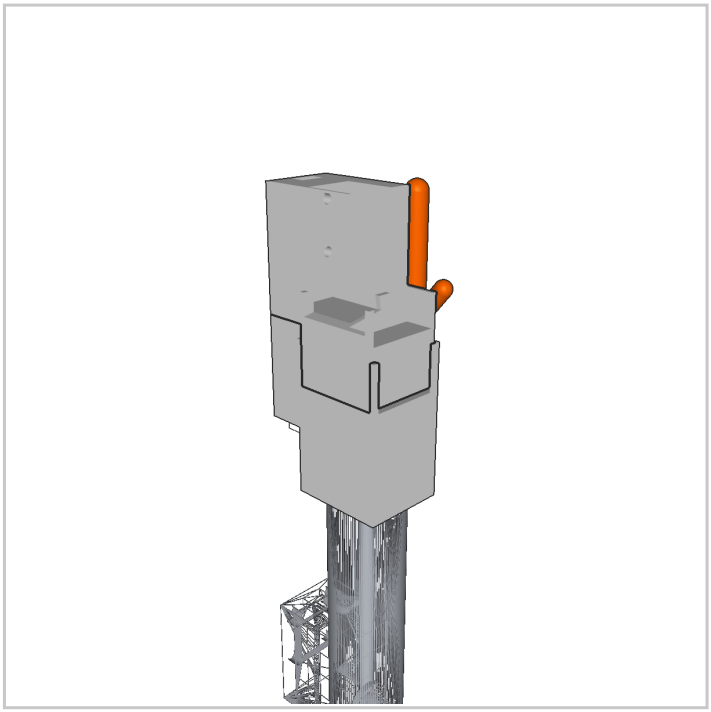

Step 9

gripper

9a. Insert servo into bracket

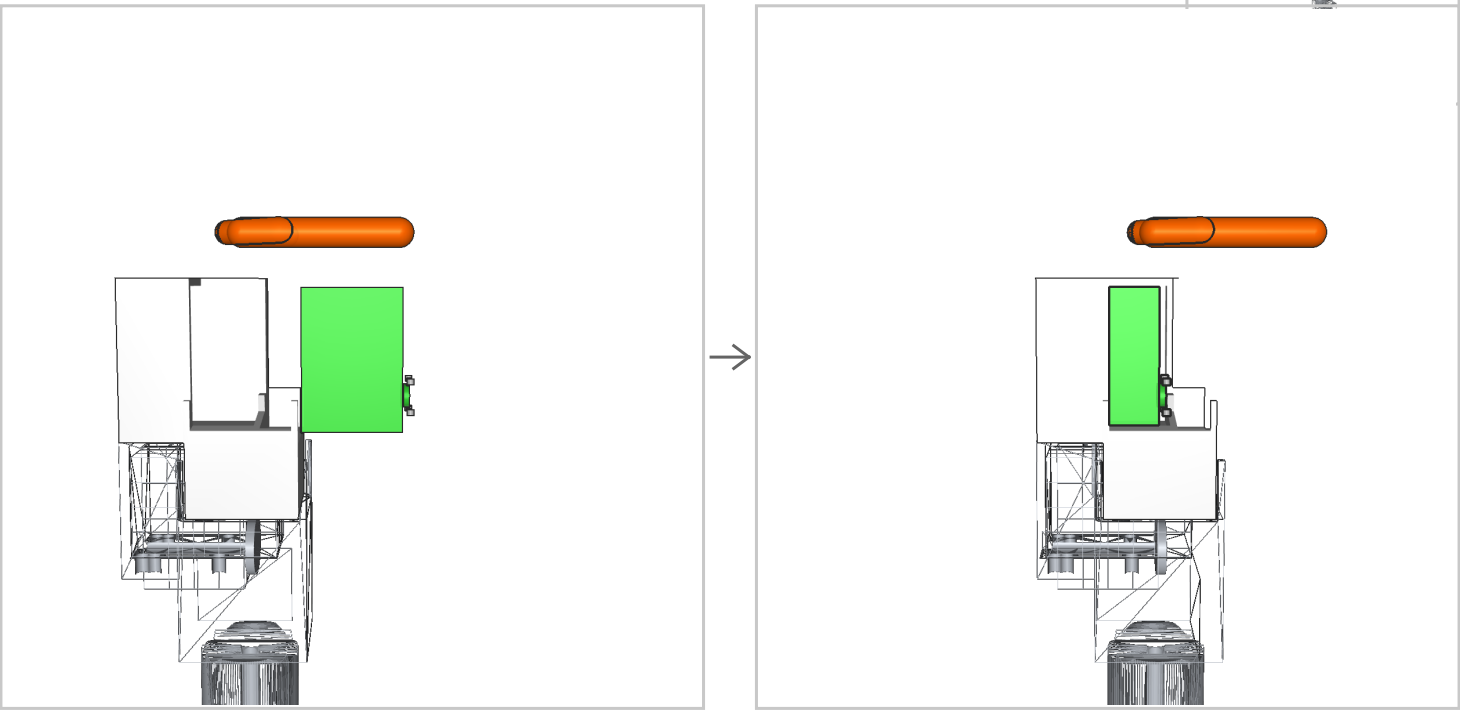
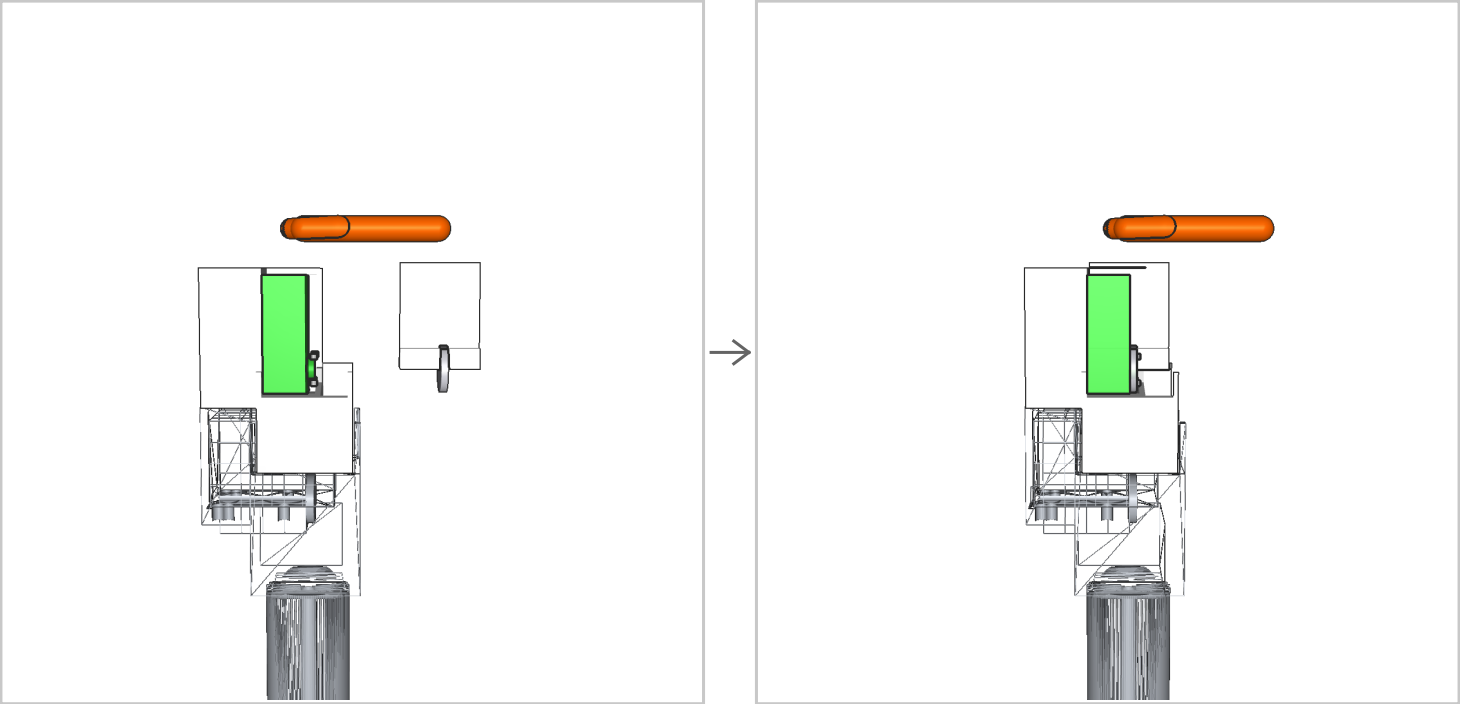
9b. Attach jaw onto horn