wheeler_base

Completed assembly

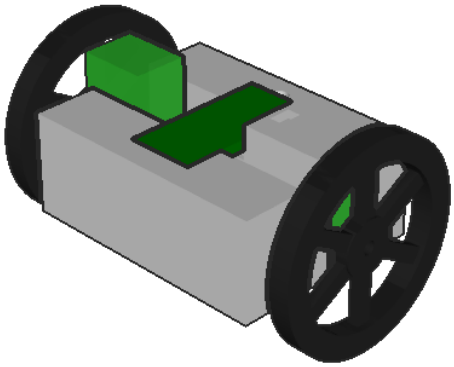

Step 1

battery

1a. Insert battery into pocket

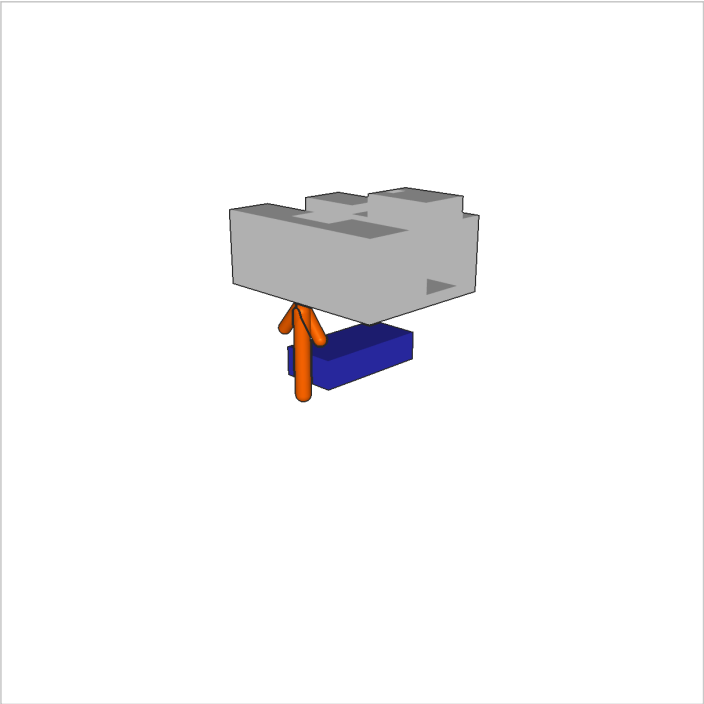

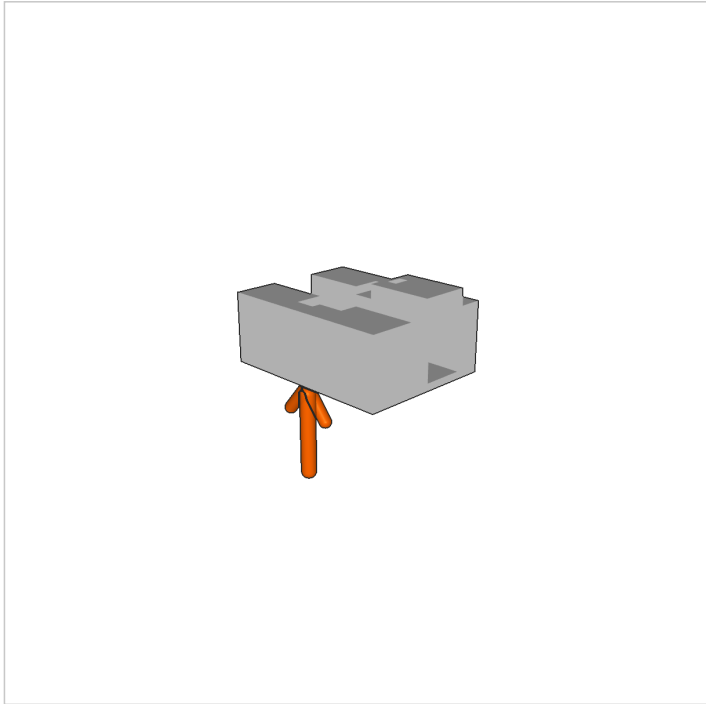

1b. Seat component

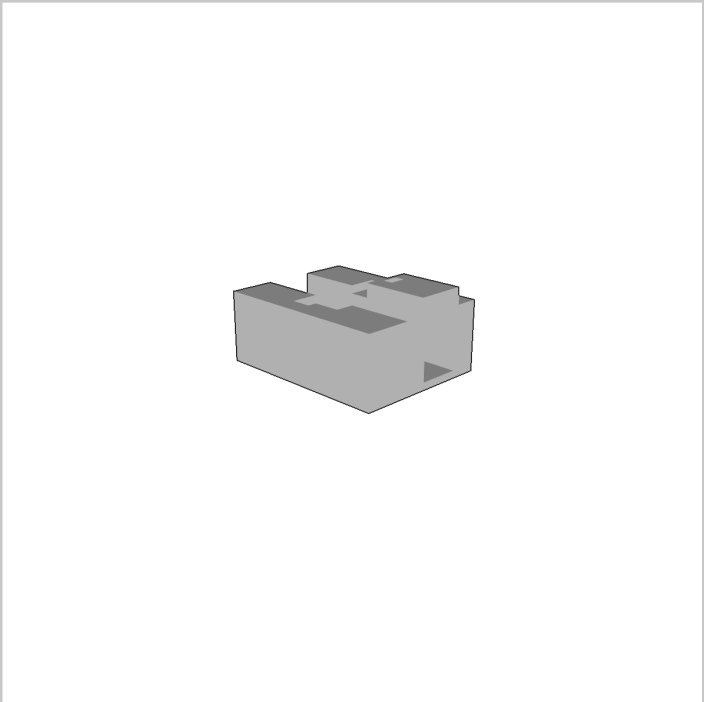

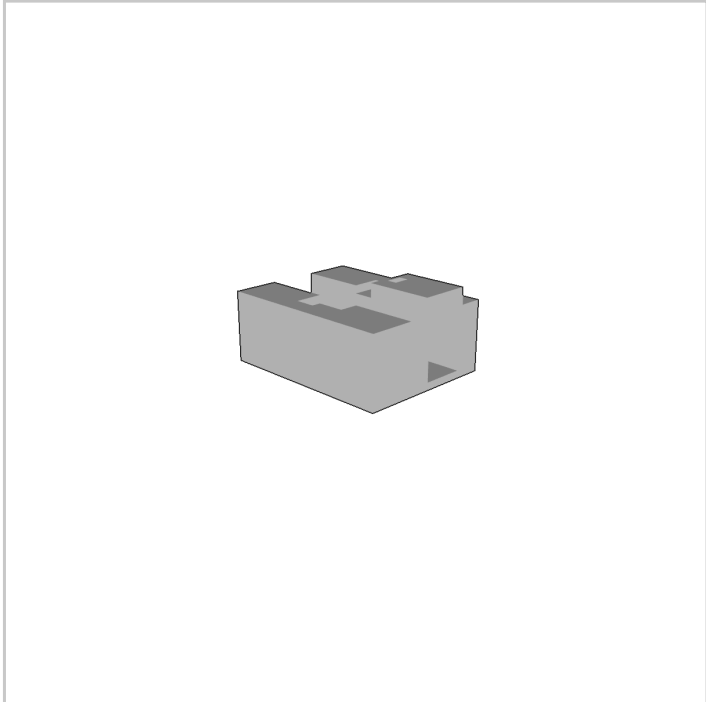

Step 2

camera

2a. Insert camera into pocket

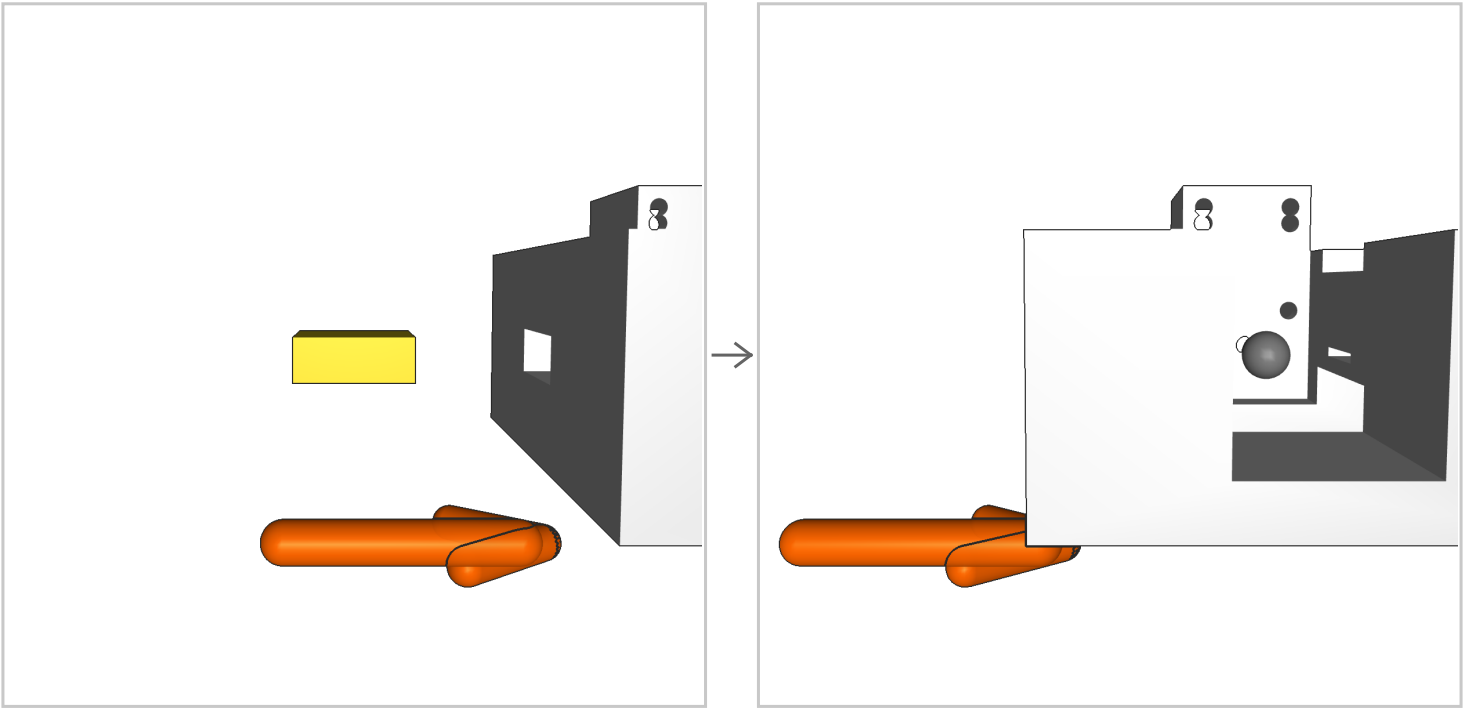

2b. Fasten with screws

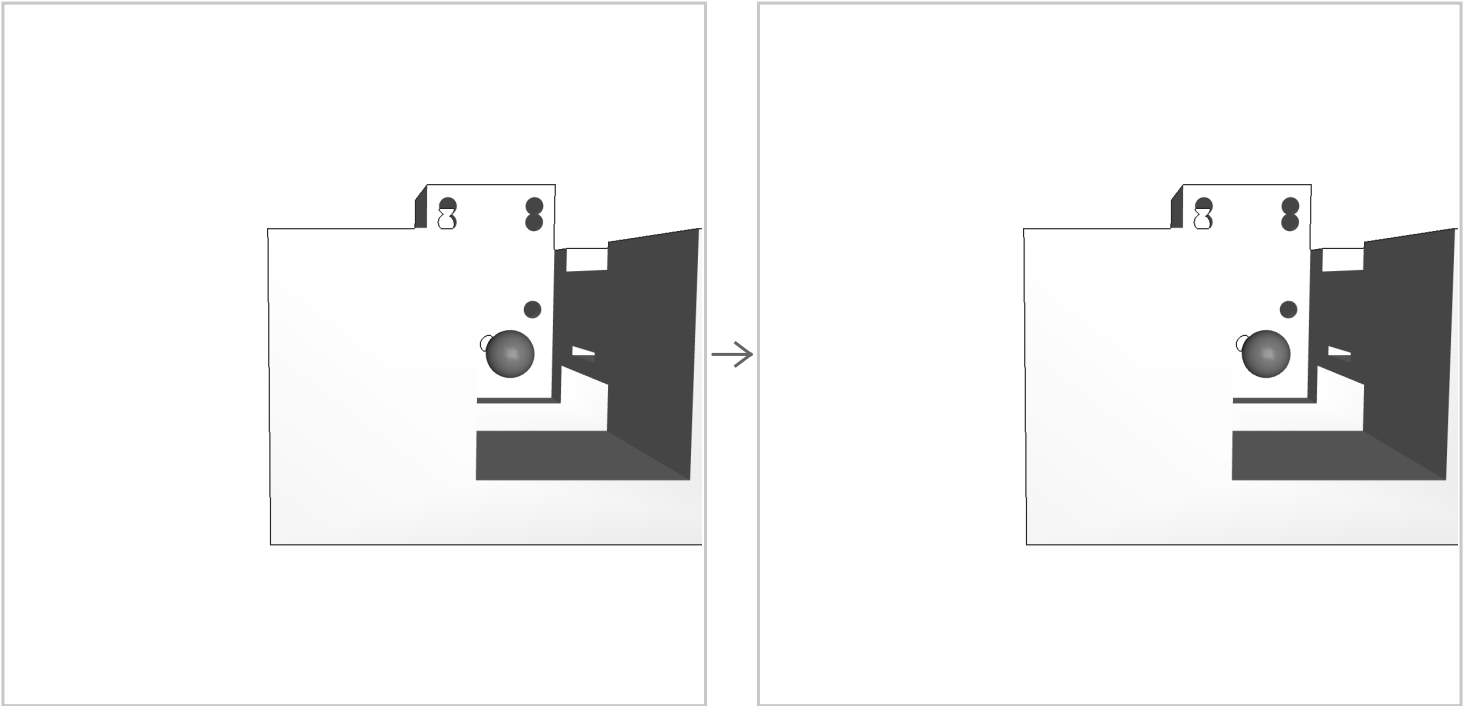

Step 3

pi

3a. Insert pi into pocket

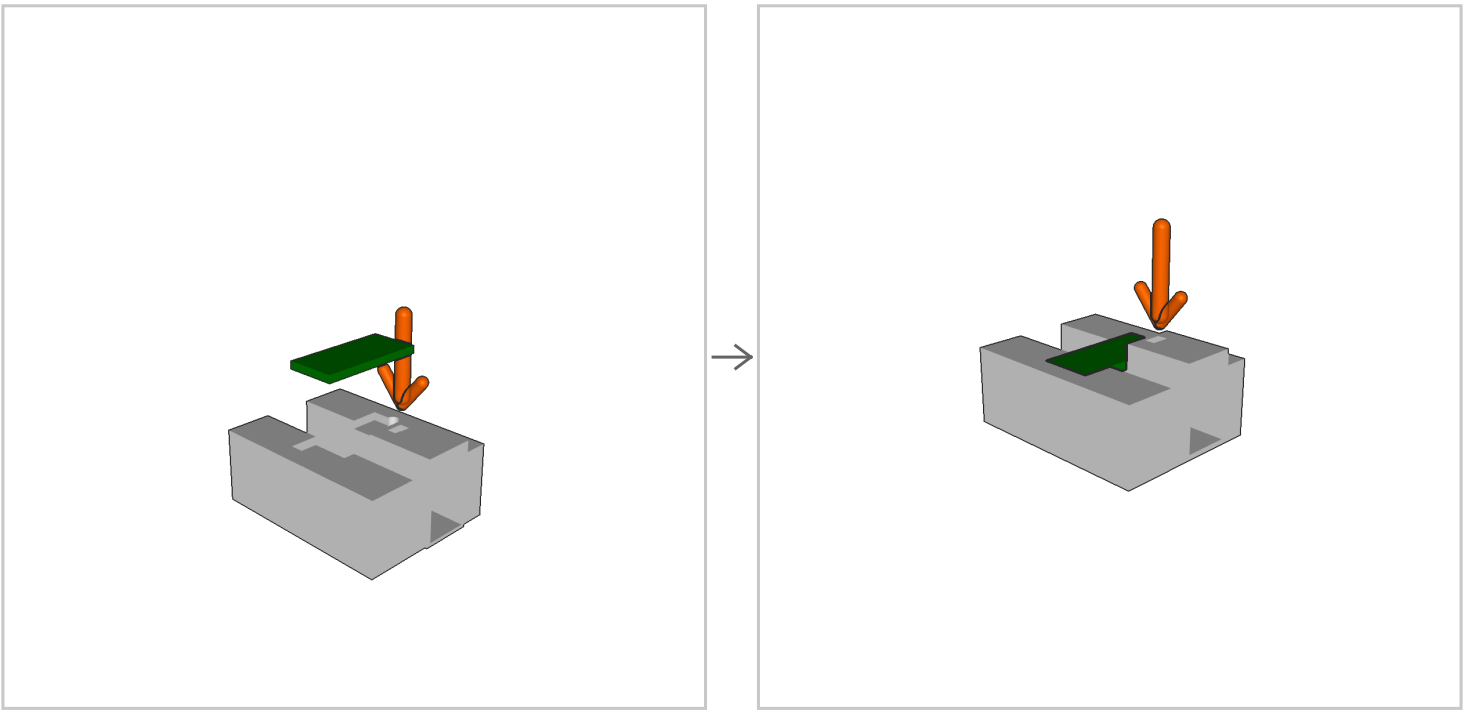

3b. Fasten with screws

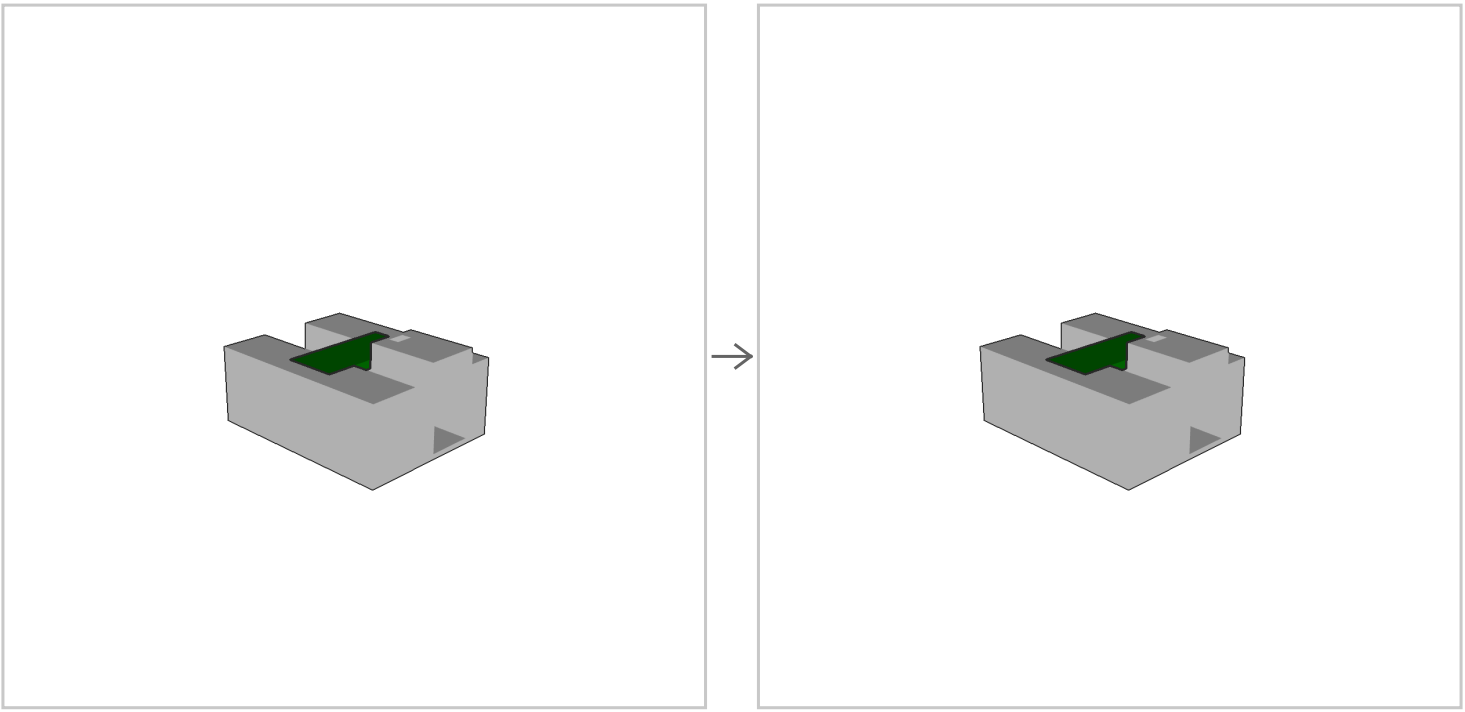

Step 4

left wheel

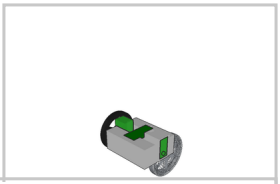

4a. Insert servo into bracket

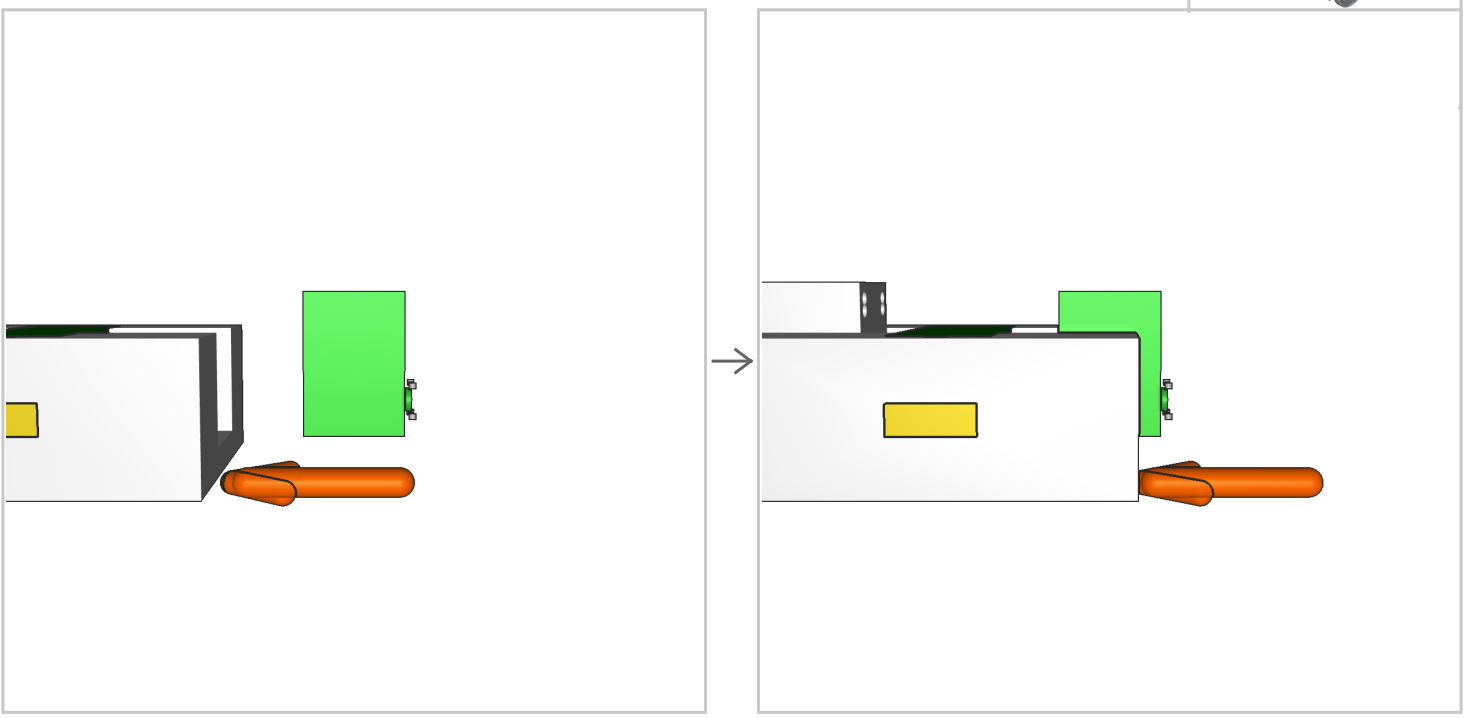

4b. Attach left rim onto horn

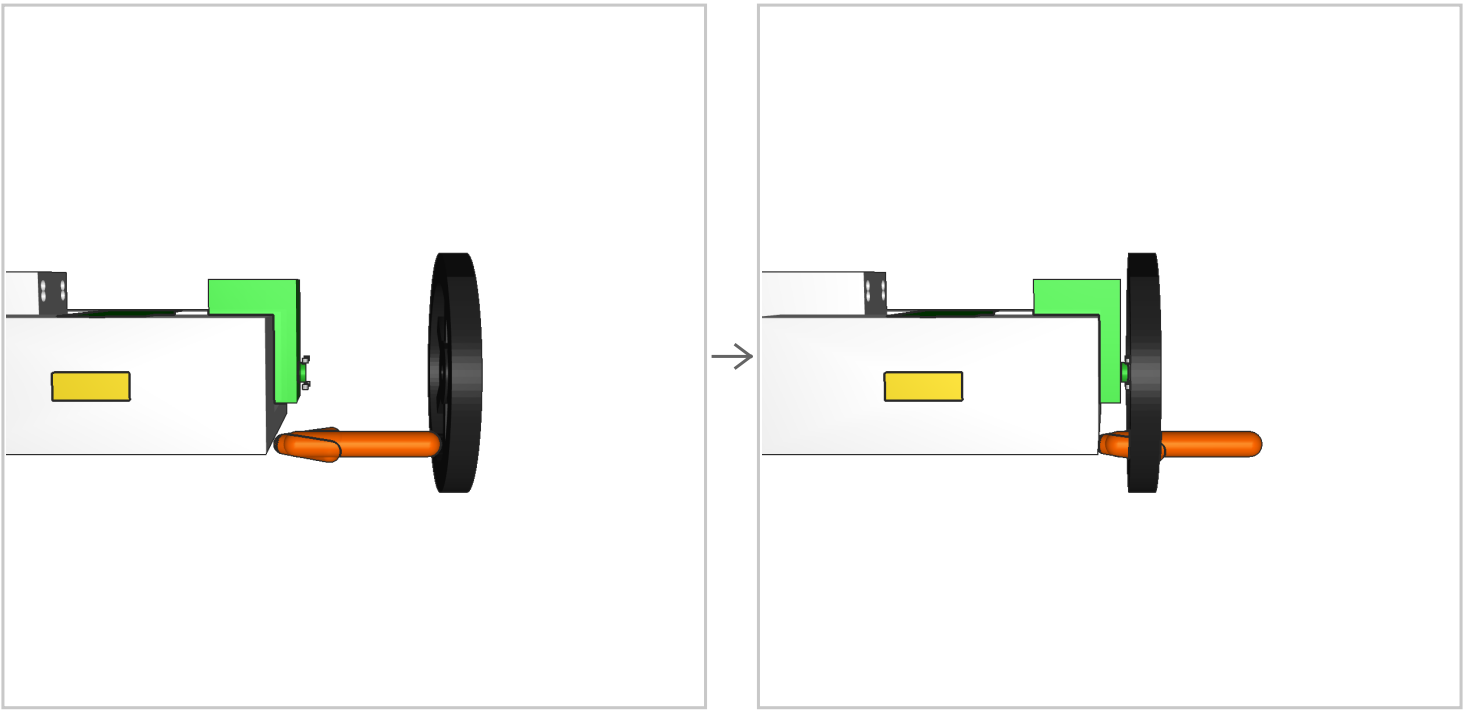

Step 5

right wheel

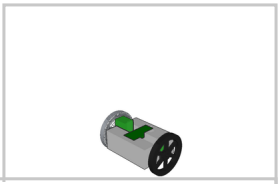

5a. Insert servo into bracket

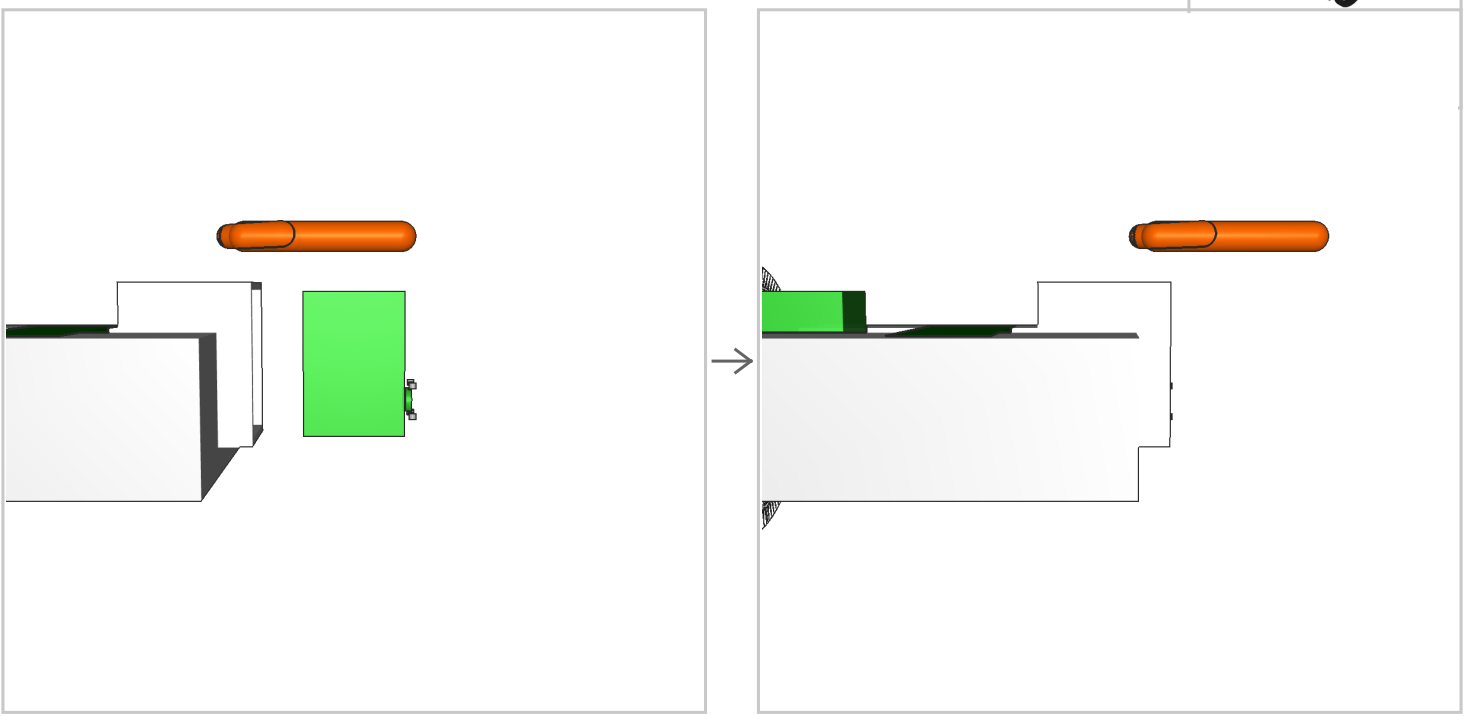
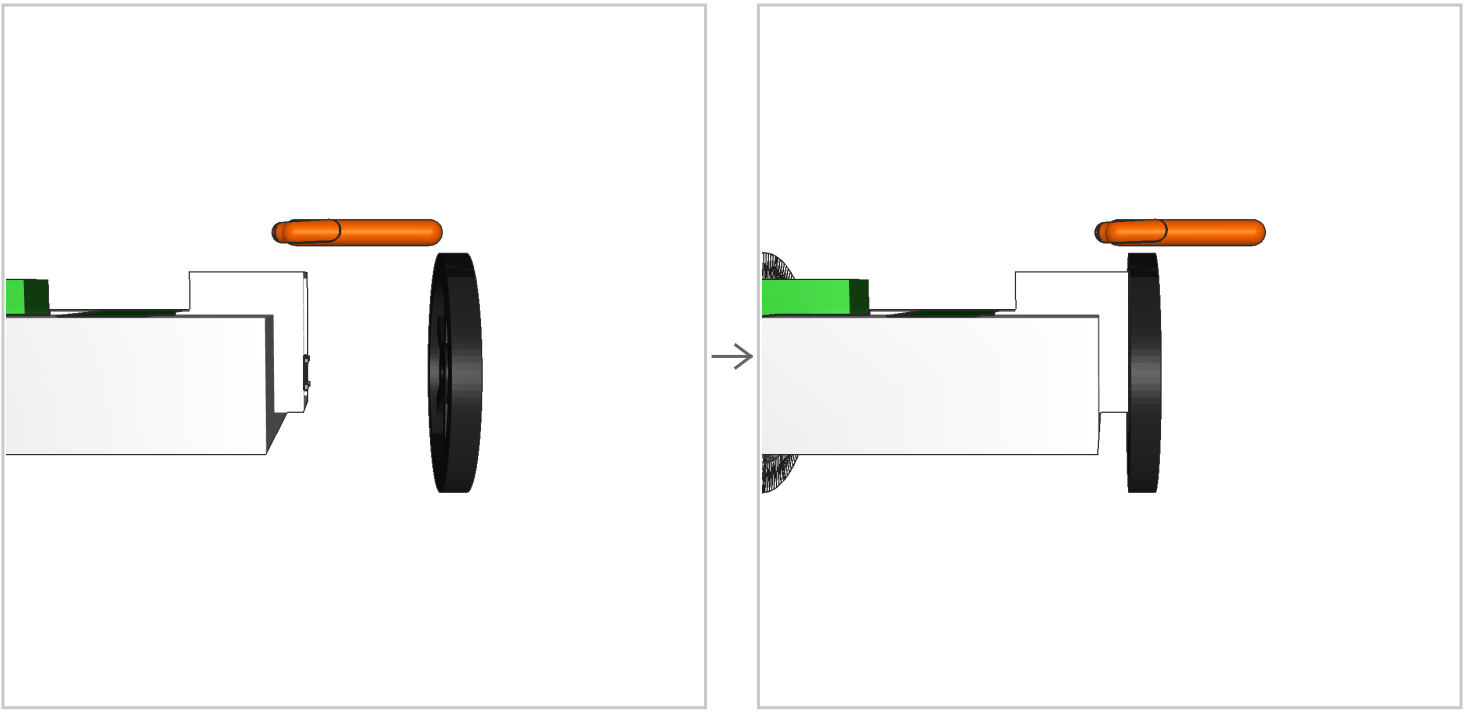
5b. Attach right rim onto horn