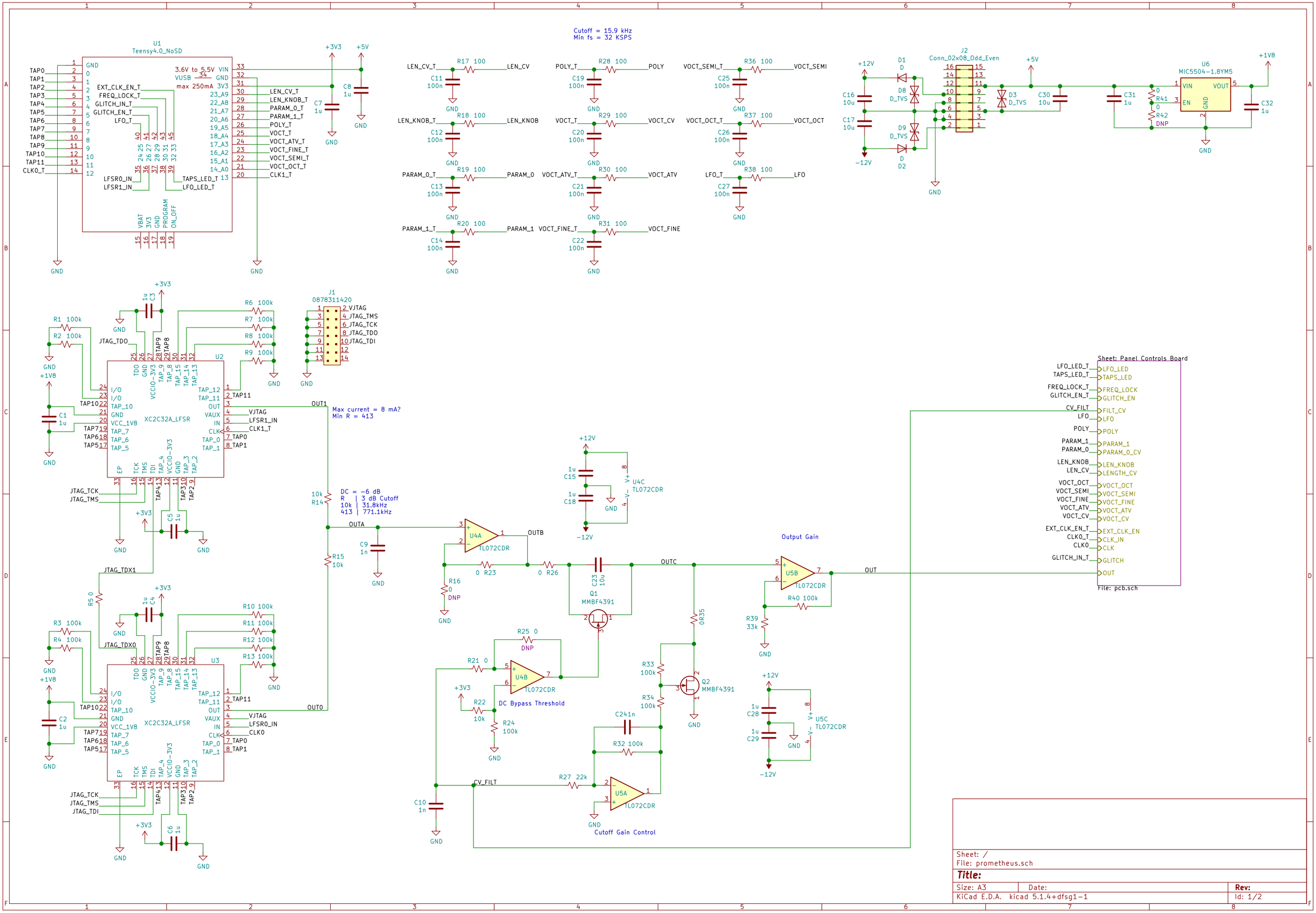
U1
Teensy4.0_NoSD
3.6V to 5.5V VIN
VUSB GND
max 250mA 3V3
EXT_CLK_EN_T
FREQ_LOCK_T
GLITCH_IN_T
GLITCH_EN_T
LFO_T
LFSR0_IN
LFSR1_IN
TAPS_LED_T
LFO_LED_T
VBAT
3V3
GND
PROGRAM
ON_OFF
LEN_CV_T
LEN_KNOB_T
PARAM_0_T
PARAM_1_T
POLY_T
VOCT_T
VOCT_ATV_T
VOCT_FINE_T
VOCT_SEMI_T
VOCT_OCT_T
CLK1_T
Cutoff = 15.9 kHz
Min fs = 32 KSPS
J2
Conn_02x08_Odd_Even
U6
MIC5504-1.8YM5
VIN
VOUT
EN
GND
R41 0
R42 DNP
+1V8
+12V
-12V
+5V
+3V3
U2
XC2C32A_LFSR
U3
XC2C32A_LFSR
J1
0878311420
VJTAG
JTAG_TMS
JTAG_TCK
JTAG_TDO
JTAG_TDI
JTAG_TDX1
JTAG_TDX0
OUT1
OUT0
Max current = 8 mA?
Min R = 413
DC = -6 dB
R | 3 dB Cutoff
10k | 31.8kHz
413 | 771.1kHz
OUTA
OUTB
OUTC
U4A
TL072CDR
U4B
TL072CDR
U4C
TL072CDR
U5A
TL072CDR
U5B
TL072CDR
U5C
TL072CDR
Q1
MMBF4391
Q2
MMBF4391
DC Bypass Threshold
Cutoff Gain Control
Output Gain
CV_FILT
OUT
Sheet: Panel Controls Board
File: pcb.sch
LFO_LED_T
TAPS_LED_T
FREQ_LOCK_T
GLITCH_EN_T
CV_FILT
LFO
POLY
PARAM_1
PARAM_0
LEN_KNOB
LEN_CV
VOCT_OCT
VOCT_SEMI
VOCT_FINE
VOCT_ATV
VOCT_CV
EXT_CLK_EN_T
CLK0_T
CLK0
GLITCH_IN_T
LFO_LED
TAPS_LED
FREQ_LOCK
GLITCH_EN
FILT_CV
PARAM_0_CV
LENGTH_CV
EXT_CLK_EN
CLK_IN
CLK
GLITCH
OUT
Sheet: /
File: prometheus.sch
Title:
Size: A3
Date:
Rev:
KiCad E.D.A. kicad 5.1.4+dfsg1-1
Id: 1/2

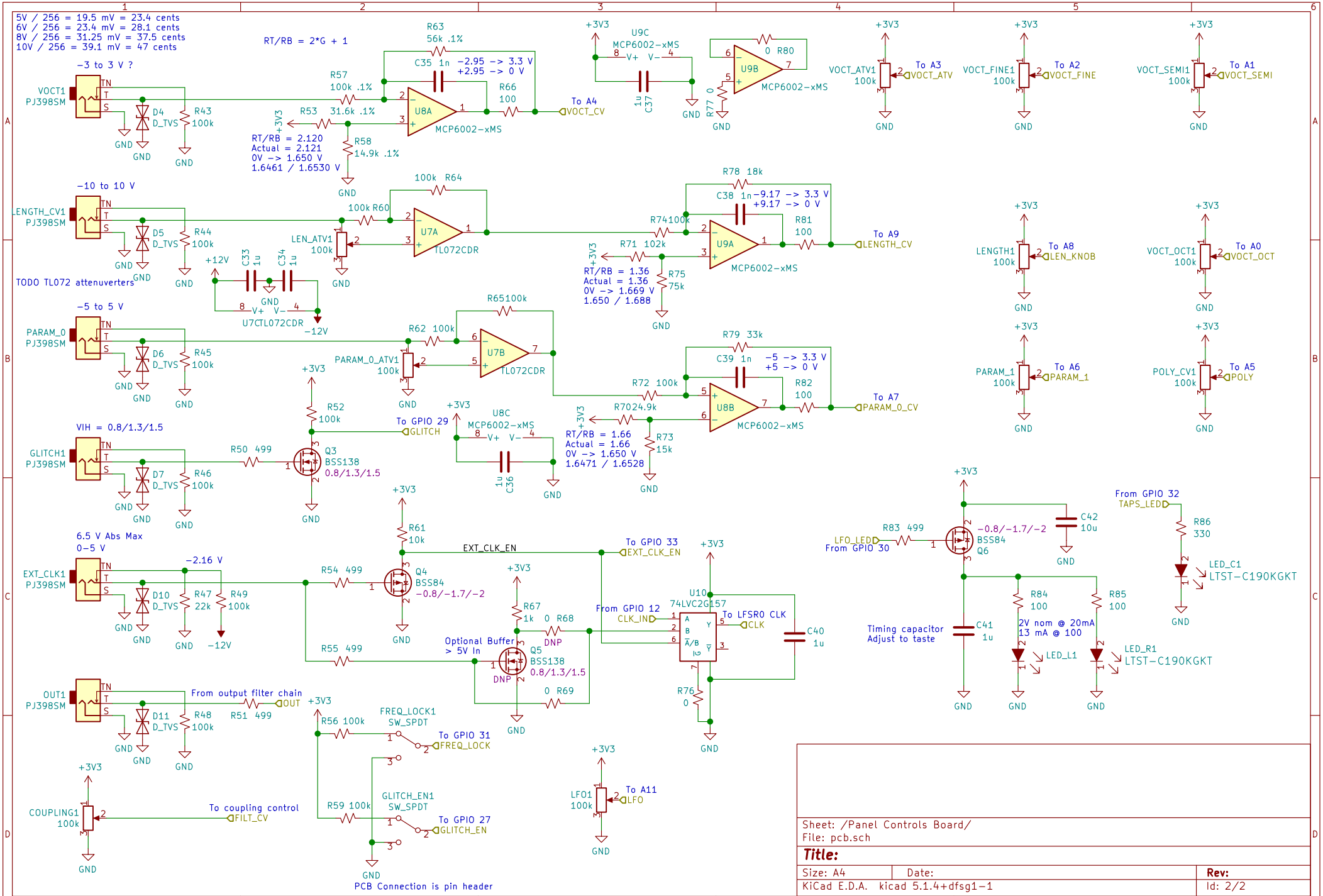
5V / 256 = 19.5 mV = 23.4 cents
6V / 256 = 23.4 mV = 28.1 cents
8V / 256 = 31.25 mV = 37.5 cents
10V / 256 = 39.1 mV = 47 cents
RT/RB = 2*G + 1
−3 to 3 V ?
VOCT1
PJ398SM
D4
D_TVS
R43
100k
R57
100k .1%
R53
31.6k .1%
R58
14.9k .1%
RT/RB = 2.120
Actual = 2.121
0V -> 1.650 V
1.6461 / 1.6530 V
R63
56k .1%
C35 1n
−2.95 -> 3.3 V
+2.95 -> 0 V
U8A
MCP6002-xMS
R66
100
To A4
VOCT_CV
U9C
MCP6002-xMS
C37
1u
U9B
MCP6002-xMS
R80
0
R77 0
VOCT_ATV1
100k
To A3
VOCT_ATV
VOCT_FINE1
100k
To A2
VOCT_FINE
VOCT_SEMI1
100k
To A1
VOCT_SEMI
−10 to 10 V
LENGTH_CV1
PJ398SM
D5
D_TVS
R44
100k
LEN_ATV1
100k
R60
100k
R64
100k
U7A
TL072CDR
TODO TL072 attenuverters
C33
1u
C34
1u
U7CTL072CDR
R78 18k
C38 1n
−9.17 -> 3.3 V
+9.17 -> 0 V
R74100k
R81
100
U9A
MCP6002-xMS
To A9
LENGTH_CV
R71 102k
R75
75k
RT/RB = 1.36
Actual = 1.36
0V -> 1.669 V
1.650 / 1.688
LENGTH1
100k
To A8
LEN_KNOB
VOCT_OCT1
100k
To A0
VOCT_OCT
−5 to 5 V
PARAM_0
PJ398SM
D6
D_TVS
R45
100k
PARAM_0_ATV1
100k
R62 100k
R65100k
U7B
TL072CDR
R79 33k
C39 1n
−5 -> 3.3 V
+5 -> 0 V
R72 100k
R82
100
U8B
MCP6002-xMS
To A7
PARAM_0_CV
R7024.9k
R73
15k
RT/RB = 1.66
Actual = 1.66
0V -> 1.650 V
1.6471 / 1.6528
PARAM_1
100k
To A6
PARAM_1
POLY_CV1
100k
To A5
POLY
VIH = 0.8/1.3/1.5
GLITCH1
PJ398SM
D7
D_TVS
R46
100k
R50 499
Q3
BSS138
0.8/1.3/1.5
R52
100k
To GPIO 29
GLITCH
U8C
MCP6002-xMS
C36
1u
6.5 V Abs Max
0−5 V
EXT_CLK1
PJ398SM
D10
D_TVS
R47
22k
R49
100k
−2.16 V
R54 499
Q4
BSS84
−0.8/−1.7/−2
R61
10k
EXT_CLK_EN
To GPIO 33
EXT_CLK_EN
R67
1k
0 R68
DNP
From GPIO 12
CLK_IN
U10
74LVC2G157
To LFSR0 CLK
CLK
C40
1u
R55 499
Optional Buffer
> 5V In
Q5
BSS138
0.8/1.3/1.5
0 R69
R76
0
OUT1
PJ398SM
D11
D_TVS
R48
100k
From output filter chain
OUT
R51 499
R56 100k
FREQ_LOCK1
SW_SPDT
To GPIO 31
FREQ_LOCK
COUPLING1
100k
To coupling control
FILT_CV
R59 100k
GLITCH_EN1
SW_SPDT
To GPIO 27
GLITCH_EN
PCB Connection is pin header
LFO1
100k
To A11
LFO
LFO_LED
From GPIO 30
R83 499
Q6
BSS84
−0.8/−1.7/−2
C42
10u
From GPIO 32
TAPS_LED
R86
330
LED_C1
LTST−C190KGKT
R84
100
R85
100
Timing capacitor
Adjust to taste
C41
1u
2V nom @ 20mA
13 mA @ 100
LED_L1
LED_R1
LTST−C190KGKT
Sheet: /Panel Controls Board/
File: pcb.sch
Title:
Size: A4
Date:
Rev:
KiCad E.D.A. kicad 5.1.4+dfsg1−1
Id: 2/2