C Programming

Lecture 5: Functions and MACROs

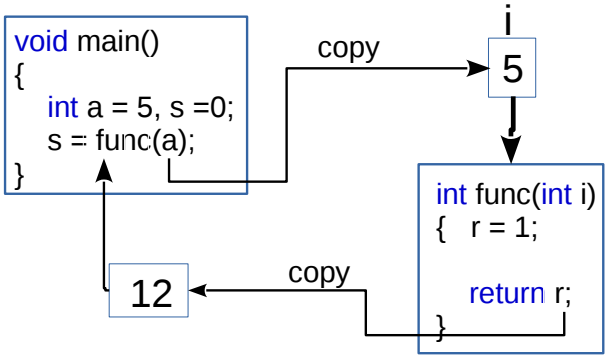

Lecturer: *Dr*. Wan-Lei Zhao

Autumn Semester 2022

Email: wlzhao@xmu.edu.cn, copyrights are fully reserved by the author.

Outline

1. Functions: declaration, definition and calling
2. Functions with Examples
3. Parameter Transfer in C Functions
4. Recursive Functions
5. Visibility and Life-cycle of Variables
6. Precompilation Instructions and Macros

Overview

- Functions we know

```
int main(.);
int printf(..);
int scanf(.);
float sqrt(.);
float floor(.);
float fabs(.);
```

- Functions in math

$$f(x) = sin(x)$$
$$g(x) = x^2$$

- They are actually comparable
- Function in C is more general
- We are going to learn to organize our codes into functions (blocks)

Advantages of function (1)

- We are already familiar with functions

```
int main(.); //entrance of the program
int printf(..); //print things onto screen
int scanf(.);  //read input from keyboard
float sqrt(.); //take square root
float floor(.); //take maximum number smaller than input
float fabs(.); //take absolute value of a float number
```

- Advantages
  - No need to repeat others work (reinvent the wheel)
  - No need to write things again and again
  - Your codes become cleaner

Introdution of function (1)

- Let's start with a simple example

```
#include <stdio.h>
void hi(int i) //<——declaration of function "hi"
{
    printf("Hello-%d\n", i);
}

int main()
{
    int i = 0;
    for(i = 0; i < 5; i++)
        hi(i); //<— call function hi(int i)
    return 0; //return value to the one who calls it
}
```

- We call **hi**() inside main
- "**main**()" cannot be called by any other function

Declaration of function (1)

- Declare a function for $n!$

```
long fact(int i); //<— this is the declaration

int main()
{
    int i = 5, f = 0;
    f = fact(i);
    return 0; //return value to the one who calls it
}
```

- The name should be **unique**
- The input parameter(s) along with the types should be specified
- The output value type should be specified

Declaration of function (2)

- Declare a function for $n!$

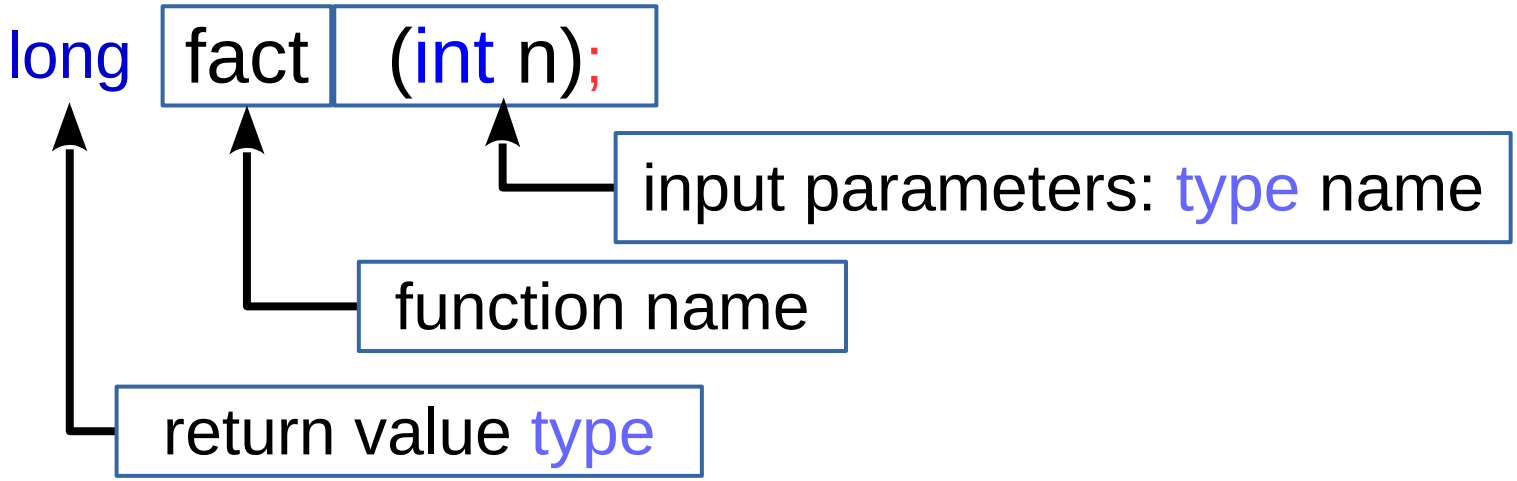

- The name should be **unique**
- There should be input parameter(s) along with the types
- There should be output value type
- If there is nothing, the return type is int by default (this is not recommended!!)

Declaration of function (3)

- Declare a function for $n!$

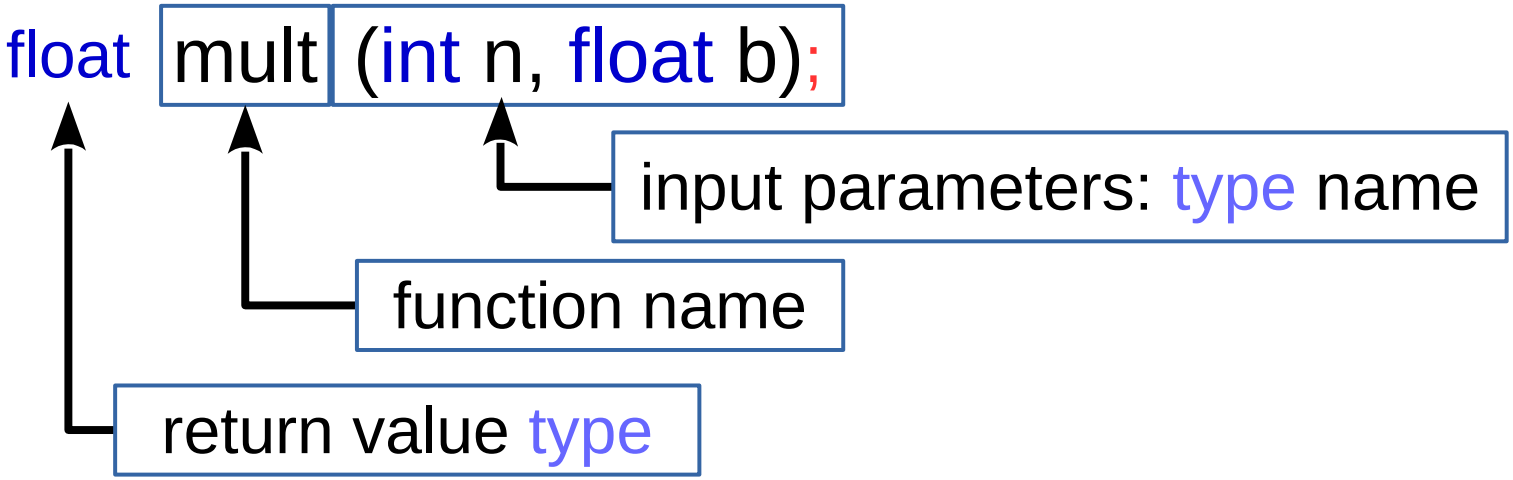

- The name should be **unique**
- There should be input parameter(s) along with the types
- There should be output value type
- If there is nothing, the return type is int by default

Define a function (1)

- Declare a function for $n!$

```
long fact(int i); //<— this is the declaration

int main()
{
    int i = 5, f = 0;
    f = fact(i);
    return 0; //return value to the one who calls it
}
```

error: undefined reference to 'fact'

- "fact" has been declared, however not defined (implemented)
- There is no function body
- When you compile it, above error comes out

Define a function (2)

- Declare a function for $n!$

```
long fact(int i); //<— this is the declaration

int main()
{
    int i = 5;
    long f = 0;
    f = fact(i);
    return 0; //return value to the one who calls it
}
```

- Now, let's think about how to implement fact()

Define a function (3)

```
long func1(int n, int i)
{

    .......

    return r;
}
```

- You need put function implementation inside the brackets "{}"

Define a function (4)

- Now, let's think about how to implement fact()
  1. For i from n to 1 do
  2. r = r*i
  3. $i--$
  4. End-for
  5. return r

Define a function (4): separate declaration from definition

```
long fact(int i);
int main()
{
    int i = 5;
    long f = 0;
    f = fact(i);
    return 0;
}
long fact(int i)
{
    long n = 1;
    if(i < 0)
      return 0;
    else if(i == 0)
      return 1;
    else
    {
        while(i>0)
        {
            n = n*i;
            i--;
        }
    }
    return n;
}
```

Define a function (5): combine declaration with definition

```
long fact(int i)
{
    long n = 1;
    if(i < 0)
      return 0;
    else if(i == 0)
      return 1;
    else
    {
        while(i>0)
        {
            n = n*i;
            i--;
        }
    }
    return n;
}
```

```
int main()
{
    int i = 5;
    long f = 0;
    f = fact(i);
    return 0;
}
```

Function definition: a summary

- Princeples in function definition
  1. Remember return type, if there is no need, put void
  2. Give a unique and self-telling name to your function
  3. Define function first, then you can call it (just as variable in C)
  4. Parameters along with the type appear in pair
  5. Parameters are transferred by value

Example-1

- Define a function to calculate the area of a circle
- Arguments and Parameters should be matched

```
float area(float r, const float pi)
{
    float a = 0;
    a = r*r*pi;
}

int main()
{
    float r = 1.5;
    const float pi = 3.1415926;
    r = area(r, pi);
    return 0;
}
```

Example-2 (1)

- Define a function to check whether a number is Palindrome number
- such as: 321123, 1221, 121

Think about this in 5 minutes ...

Example-2 (2)

```
int isPalindr(int n)
{
    int b = n, r = 0;
    while(b > 0){
        r = r*10+b%10;
        b = b/10;
    }
    if(n == r){
        return 1;
    }else{
        return 0;
    }
}
int main(){
    int a = 515;
    if(isPalindr(a)){
        printf("%d is Palindrome number\n", a);
    }
    return 0;
}
```

Example-3: perfect number (1)

- 1. Define a function to jugde whether an integer is a **perfect number**
- Perfect number: number equals to the sum of all its factors
- $6 = 1 + 2 + 3$
- 2. Call it to output all the perfect numbers in range [2, 300]

Think about this problem in 5 minutes...

Example-3: perfect number (2)

- 1. Define a function to jugde whether an integer is a **perfect number**
- Perfect number: number equals to the sum of all its factors
- $6 = 1 + 2 + 3$
- 2. Call it to output all the perfect numbers in range [2, 300]

1. Given a number
2. We should work out all its factors
3. Sum all the factors up
4. See whether it is equal to the number
5. We should use % operator a lot

Example-3: perfect number (3)

- 1. Define a function to jugde whether an integer is a **perfect number**
- **Perfect number**: number equals to the sum of all its factors
- $6 = 1 + 2 + 3$
- 2. Call it to output all the perfect numbers in range [2, 300]
- Steps:
  1. Give n
  2. For i from 2 to n do
  3. check whether n is dividable by i
  4. if yes, sum up
  5. Check wether sum equals to n
  6. Return 1 or 0
- Let's do it now!!

Example-3: perfect number (4)

1. Give n
2. For i from 2 to n do
3. check whether n is dividable by i
4. if yes, sum up
5. Check wether sum equals to n
6. Return 1 or 0

```
int isPerfect(int n)
{
    int i = 0, sum = 1;
    int up = ceil(n/2.0);
    for(i = 2; i < up; i++)
    {
        if(n%i == 0)
        {
            sum += i;
        }
    }
    if(sum == n)
      return 1;
    else
      return 0;
}
```

Example-3: perfect number (5)

```c
#include <stdio.h>
#include <math.h>
int isPerfect(int n)
{
    int i = 0, sum = 1;
    int up = ceil(sqrt(n));
    for(i = 2; i < up; i++)
    {
        if(n%i == 0)
        {
            sum += i;
        }
    }
    if(sum == n)
      return 1;
    else
      return 0;
}
```

```c
int main()
{
    int i = 0;
    for(i = 2; i <= 300; i++)
    {
        if(isPerfect(i))
        {
            printf("%d\n", i);
        }
    }
    return 0;
}
```

Example-4: Armstrong number (1)

- Define a function to check whether a number is Amstrong number
- For one digits: $1^1 = 1$
- For three digits: $1^3 + 5^3 + 3^3 = 153$
- For four digits: $1^4 + 6^4 + 3^4 + 4^4 = 1634$

Think about this in 5 minutes ...

Example-4: Armstrong number (2)

```c
#include <stdio.h>
int ndigit(int n){
  int nd = 0, a = n;
  while(a > 0){
     a = a/10;
     nd++;
  }
  return nd;
}
int isArms(int n, int nd)
{
  int s = 0, b = 0;
  int a = n, i = 0, t = 0;
  t = 1; a = n;
  while(a > 0){
    b = a%10;
    t = 1;
    for(i = 0; i<nd; i++){
      t = t*b;
    }
    s += t;
    a  = a/10;
  }
  if(s == n)
    return 1;
  else
    return 0;
 }
int main()
{
  int i = 1 , nd = 0;
  for(i=1; i<100000; i++){
    nd = ndigit(i);
    if(isArms(i, nd)==1){
       printf("%6d-", i);
    }
  }
  printf("\n");
  return 0;
}
```

Parameter Transfer (1)

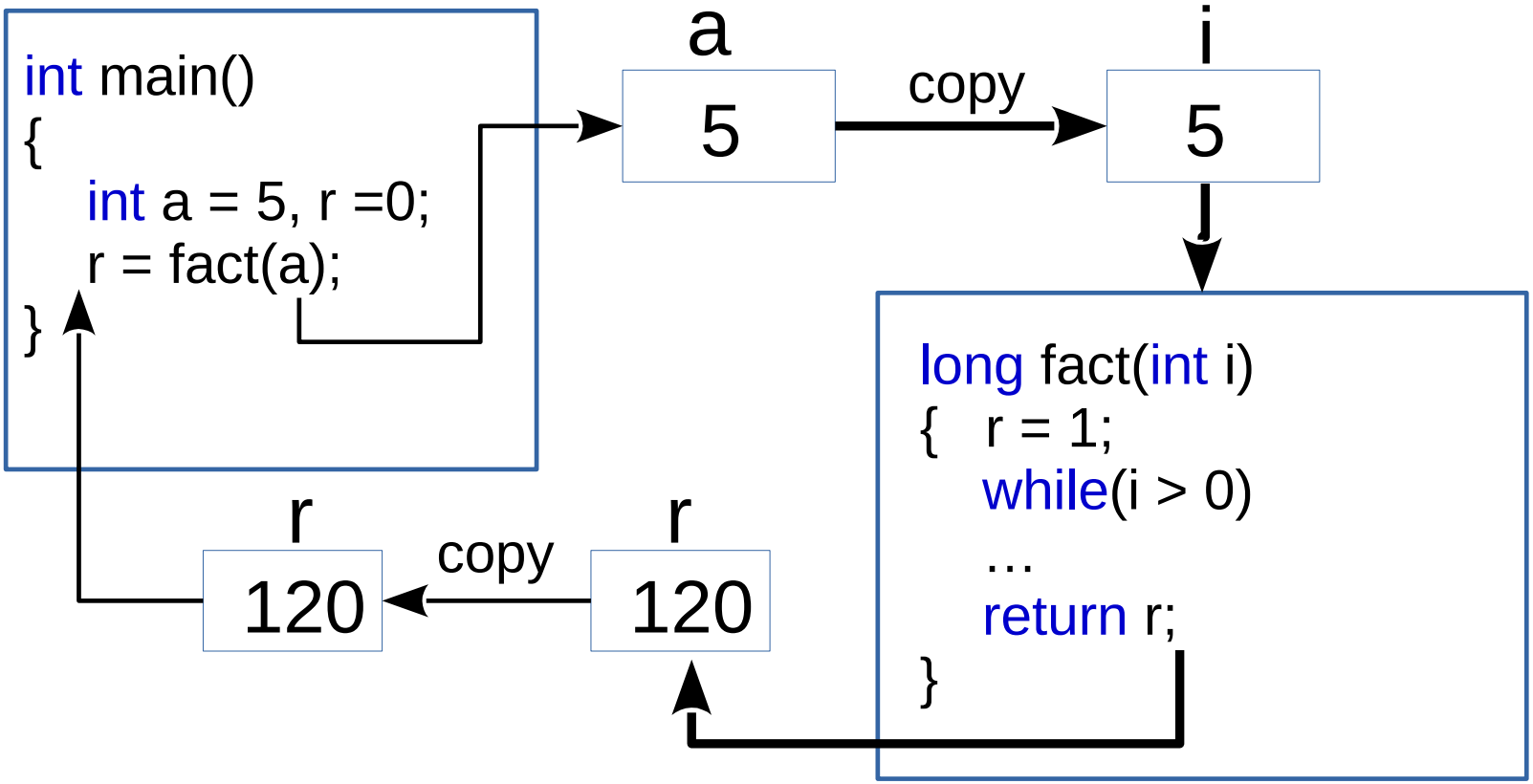

- Parameters are transferred in by value not **by address**

Parameter Transfer (2)

- Let's consider a simple coding problem
- Given integers *a* and *b*
- You are required to swap their values
- For example, a = 5, b = 8
- After swapping, it becomes a = 8, b = 5

Parameter Transfer (3)

- You are required to swap their values
- For example, a = 5, b = 8
- After swapping, it becomes a = 8, b = 5

```
int main()
{
    int a = 5, b = 8;
    int tmp;
    printf("a = %d, b = %d\n", a, b);
    tmp = a; a = b;
    b = tmp;
    printf("a = %d, b = %d\n", a, b);
    return 0;
}
```

Parameter Transfer (4)

- Now, let's do it by a function

```
#include <stdio.h>
void swap(int a, int b)
{
    int tmp = a;
    a = b; b = tmp;
    return ;
}
int main()
{
    int a = 5, b = 8;
    printf("a = %d, b = %d\n", a, b);
    swap(a, b);
    printf("a = %d, b = %d\n", a, b);
}
```

Parameter Transfer (5)

- The result is against our will, why???

```c
#include <stdio.h>
void swap(int a, int b)
{
    int tmp = a;
    a = b; b = tmp;
    return ;
}
int main()
{
    int a = 5, b = 8;
    printf("a = %d, b = %d\n", a, b);
    swap(a, b);
    printf("a = %d, b = %d\n", a, b);
    return 0;
}
```

[Output:]

```
a = 5, b = 8
a = 5, b = 8
```

Parameter Transfer (6)

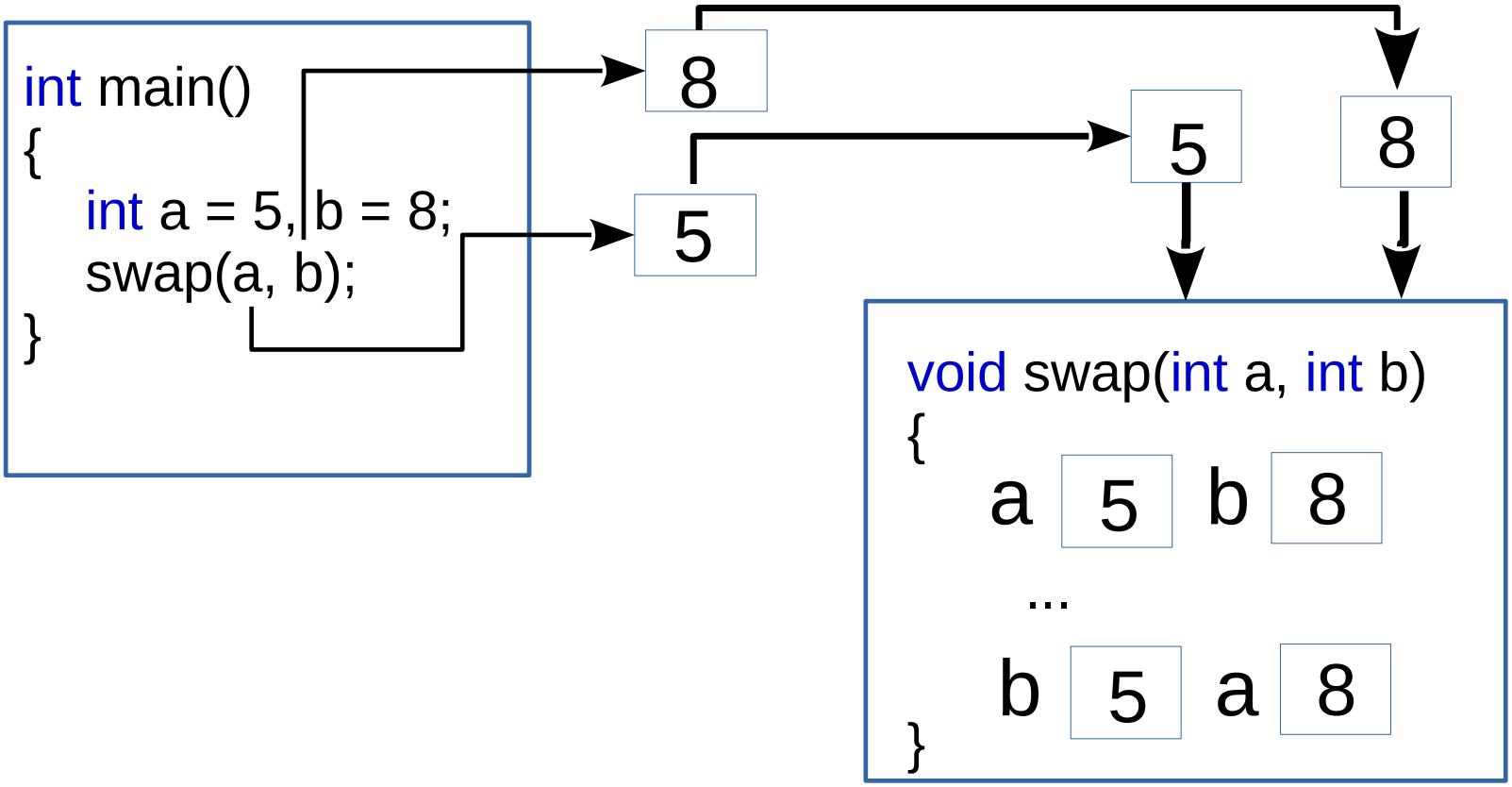

- Parameters are transferred in by value not **by address**

Function Calling again (1)

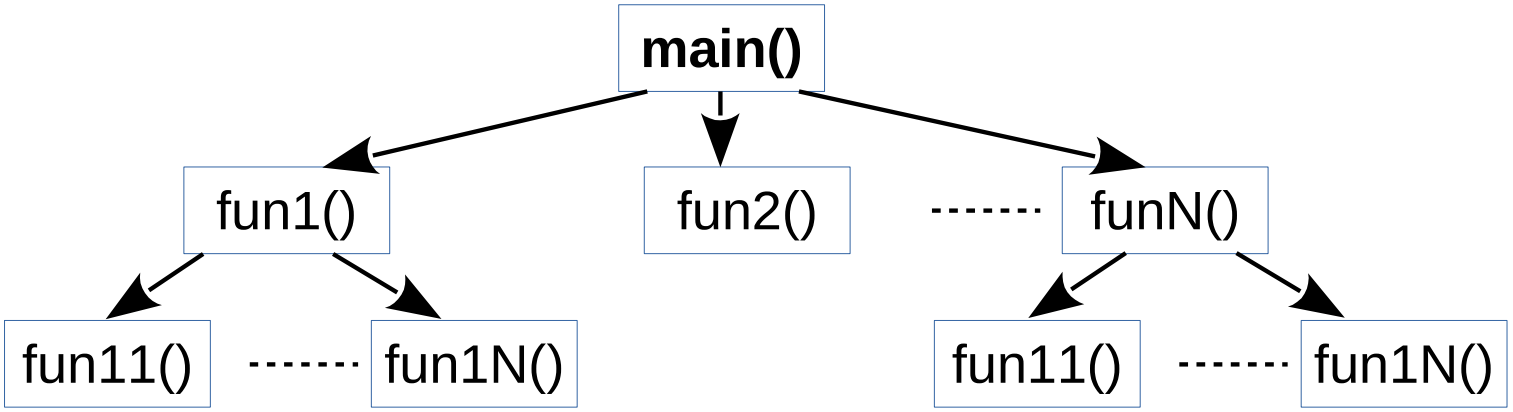

- Function can be called in a cascaded manner
- 'main' cannot be called
- Functions are not necessarily called by 'main' directly

Function Calling again (2)

- Parameters are transferred in by value not **by address**
- Arguments and Parameters should be matched

```
float calc(int n, float a, short int c)
{
    return (a*a*n+c);
}
int main()
{
   int n = 2;
   short int w = 4;
   float x = 4.12, r = 0;
   r = 3*calc(n, x, w);
   return 0;
}
```

Outline

1. Functions: declaration, definition and calling
2. Functions with Examples
3. Parameter Transfer in C Functions
4. Recursive Functions
5. Visibility and Life-cycle of Variables
6. Precompilation Instructions and Macros

Recursive Function (1)

- We already know that function is allowed to call any other function
- Function is allowed to call itself, this is called **recursive**
- It looks like following

```
int func2(int n);
int func1(int n)
{
    int a = 2*func1(n-2);
    ...
    int b = func2(n-3);
    return (a+b);
}
```

- Noticed that "func1" has been called inside "func1"
- The scale of the problem decreases in each calling

Recursive Function: how it works (1)

```c
long fact(int n)
{
    long a = 0;
    if (n < 0)
      a = 0;
    else if(n == 1 || n == 0)
     a  = 1;
    else
     a = n*fact(n-1);

    return a;
}
```

```c
long fact(int n)
{
    long a = 1;
    int i = 0;
    if(n < 0)
      return 0;
    for(i = n; i > 0; i--)
    {
        a = a*i;
    }
    return a;
}
```

```c
int main()
{
    int n = 4, b = 0;
    b = fact(n);
    printf("fact(%d) = %d\n", n, b);
    return 0;
}
```

Recursive Function: how it works (2)

- "fact" calls itself until the **bottom** is reached
- Noticed that the scale of the problem decreases gradually
- Advantage: simple
- Darkside: requires a lot of memory

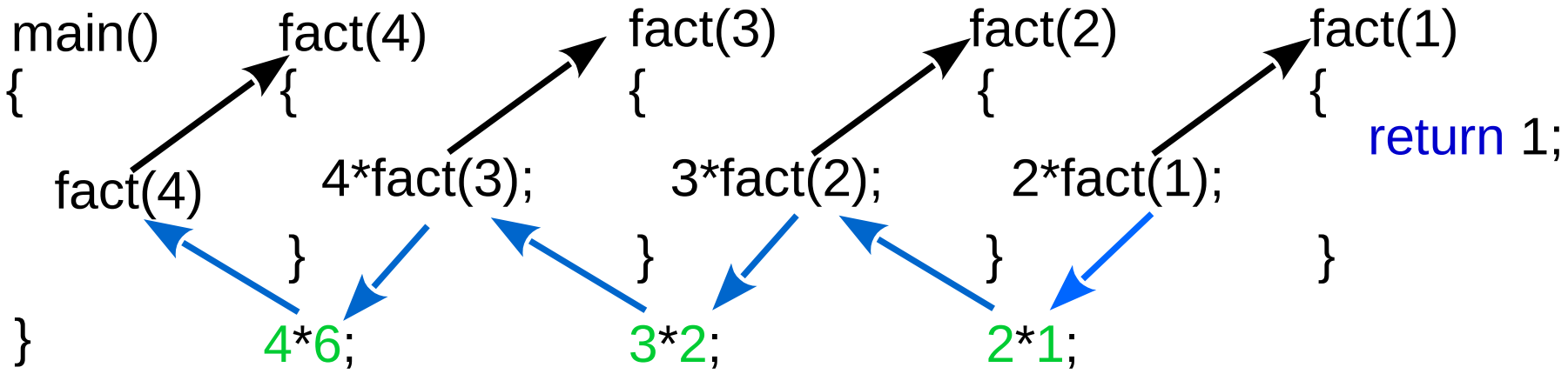

- Suggesion: try to avoid to use recursive function

Recursive Function: Hanoi Tower Problem

- One is allowed to move one disc from one beam to another a day
- Move all 64 discs from beam A to C
- Keep smaller one on the top of bigger one all the time!!

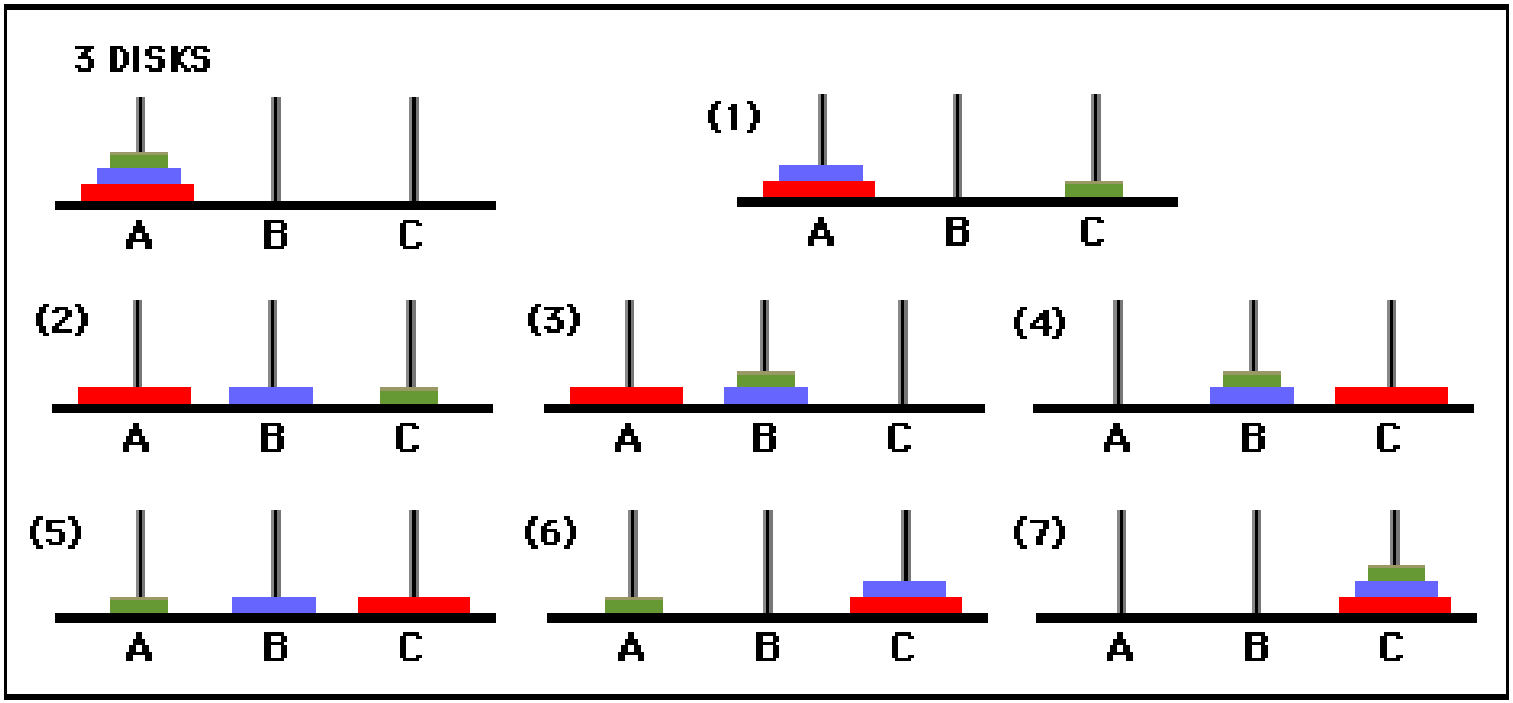

- **It would not be fulfilled even till the end of this world!!**

Source code for Hanoi Tower (1)

```
#include <stdio.h>
void hanoi(int n, char b1, char b2, char b3)
{
    if(n == 1)
    {
        printf("%c ------> %c \n", b1, b3);
    }else if(n == 2)
    {
        printf("%c ------> %c\n", b1, b2);
        printf("%c ------> %c\n", b1, b3);
        printf("%c ------> %c\n", b2, b3);
    }else{
        hanoi(n-1, b1, b3, b2);
        printf("%c ------> %c\n", b1, b3);
        hanoi(n-1, b2, b1, b3);
    }
}
```

Source code for Hanoi Tower (2)

```
19 int main()
20 {
21     int n = 20;
22     printf("Input n:-");
23     scanf("%d", &n);
24     hanoi(n, 'A', 'B', 'C');
25 }
```

1. Move top **n-1** plates from **A** to **B** via **C**
2. Move the **bottom one** to **C**
3. Move **n-1** plates from **B** to **C** via **A**

Outline

1. Functions: declaration, definition and calling
2. Functions with Examples
3. Parameter Transfer in C Functions
4. Recursive Functions
5. Visibility and Life-cycle of Variables
6. Precompilation Instructions and Macros

Visibility and Life-cycle of Variables (1)

- We take something for granted before
- Now we study them in detail
  1. Could we use the same variable name in different functions?
  2. Could we use the same variable name in the same functions?
  3. Could different functions share the same variable?
  4. When a variable is born, when it dies??

Visibility and Life-cycle of Variables (2)

1. Could we use the same variable name in different functions?

```c
int func1(int n)
{
    int r = 3, a = 1;
    return (r*n+a);
}
float func2(int n, float a)
{
    float r = 1;
    int i = 0;
    for(i = 0; i < n; i++)
    {
        r = r*a;
    }
    return r;
}
```

- The answer is Yes
- The visibility is inside function only
- It is born when the function is called
- It dies when calling is done

Visibility and Life-cycle of Variables (3)

2. Could we use the same variable name in the same function?

```
float func2(int n, float a)
{
  float r = 1;
  int r = 0;
  int i = 0;
  float i = 0;
  for(i = 0; i < n; i++, r++)
  {
      r = r*a;
  }
  return r;
}
```

- The answer is No
- Codes on the left cannot pass the compilation
- Basically, it is ambiguous
- Imagine there are two **Li Min**s in your class

Visibility and Life-cycle of Variables (4-1)

3. Could different functions share the same variable?

```
int x, y;
void swap()
{
  int t;
  t = x; x = y; y = t;
  return ;
}
int main()
{
   x = 3, y = 5;
   swap();
   printf("x=%d\n", x);
   printf("y=%d\n", y);
   return 0;
}
```

- The answer is Yes
- They are called global variables
- They are visible to all functions in this **file**
- They are defined outside of functions
- They are born when "main" is called
- They die when calling of "main" complete

Visibility and Life-cycle of Variables (4-2)

3. Could different functions share the same variable?

```c
#include <stdio.h>
int x, y;
void swap()
{
  int t;
  t = x; x = y; y = t;
  return ;
}
int main()
{
   x = 3, y = 5;
   swap();
   printf("x = %d\n", x);
   printf("y = %d\n", y);
   return 0;
}
```

```c
#include <stdio.h>
void swap(int a, int b)
{
   int tmp = a;
   a = b; b = tmp;
   return ;
}
int main()
{
  int a = 5, b = 8;
  swap(a, b);
  printf("a = %d, b = %d", a,b);
  return 0;
}
```

Visibility and Life-cycle of Variables (5)

5. When a variable is born, when it dies??

```
int incr(int a)
{
  static int x = 3;
  x = x + a;
  //printf("x = %d\n", x);
  return x;
}
int main()
{
    int i = 0, a = 0;
    for(i = 0; i < 4; i++)
    {
        a = incr(i);
        printf("a = %d\n", a);
    }
    return 0;
}
```

- When you put "**static**" before a local variable
- Its life-cycle becomes as long as global variable
- It is born when "main" is called
- It dies when calling of "main" complete
- However, it is only visible <u>within the function</u>

Visibility and Life-cycle of Variables (6)

Variable types	inside a function		outside a function	
	visibility	life cycle	visibility	life cycle
auto and **register**	√	√	X	X
static (inside)	√	√	X	√
Static (outside)	√	√	√ (within the file)	√
extern	√	√	√	√

- It is NOT recommended to use global variables
- Advantage: you can transfer value easily
- Darkside
  - You do NOT know where they have been changed
  - Hard to debug your code
  - Your code will be very messy!!!

Outline

1. Functions: declaration, definition and calling
2. Functions with Examples
3. Parameter Transfer in C Functions
4. Recursive Functions
5. Visibility and Life-cycle of Variables
6. Precompilation Instructions and Macros

Precompilation: the Concept (1)

- It happens before we compile codes to binary
- Preprocess the codes
- There are instrustions we use to communicate with the compiler

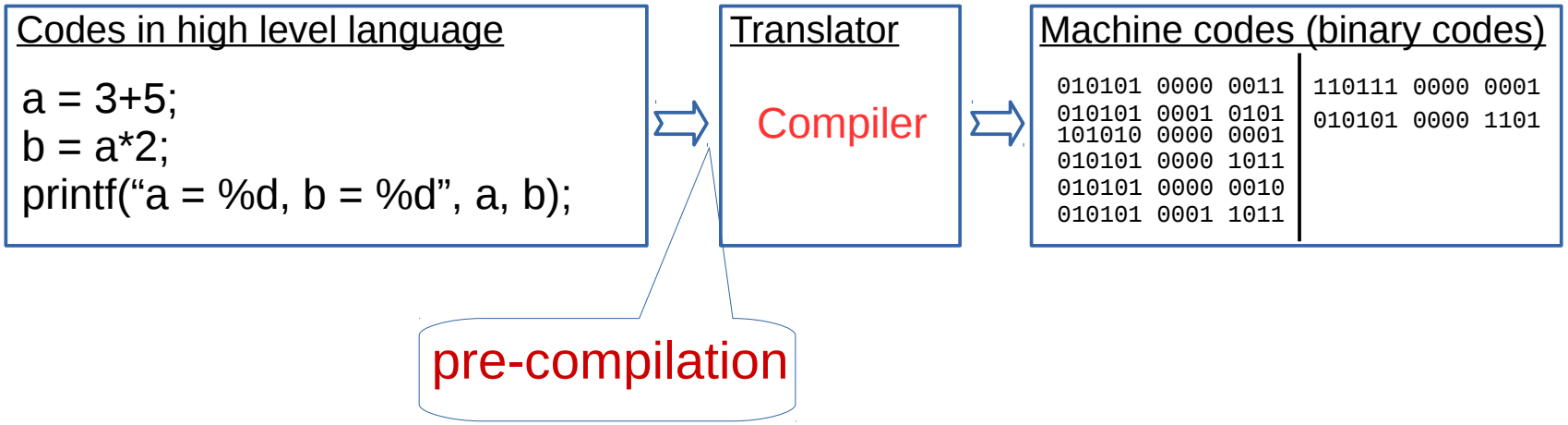

- They are executed before compilation is undertaken

Precompilation: the Concept (2)

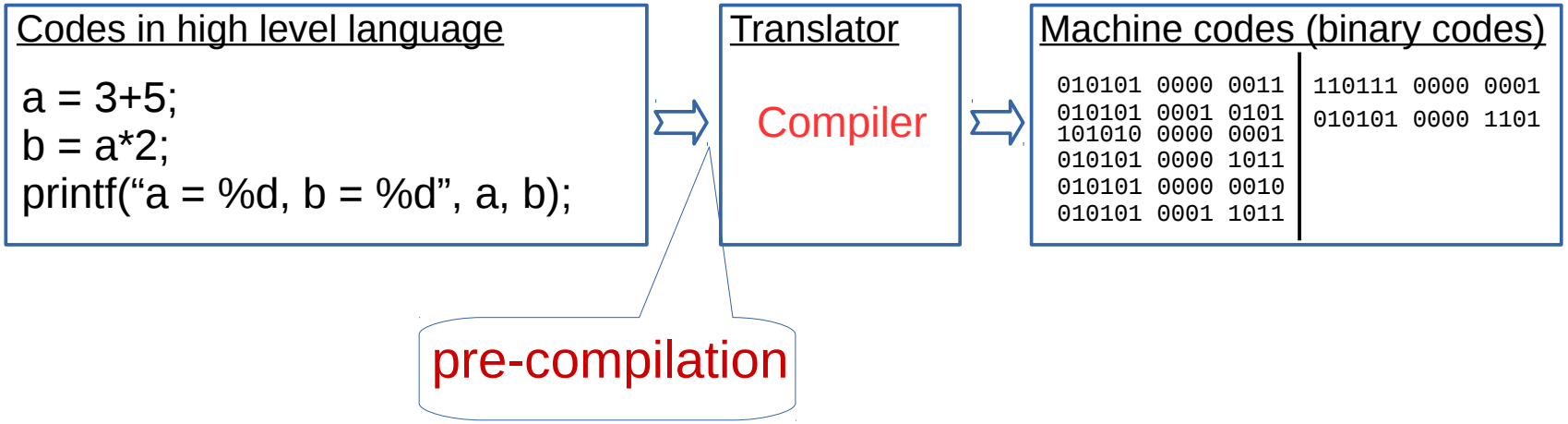

- There are instrustions we use to communicate with the compiler
- They all start with "#", pronounced as "sharp"
  1. #include header file or full path of file
  2. #define MACRO
  3. #if...#else or #if...#else if MACRO
  4. #ifndef MACRO
  5. #endif

Precompilation instruction: #include (1)

- It tells the compiler following thing
  1. A header file is required to compile the code
  2. In the header file, the function that is called in the code is declared
  3. Where the compiler is able to find the file

```
#include <stdio.h>
```

```
#include "myfunc.h"
```

- <stdio.h> tells the compiler to search in the system default path
- "myfunc.h" tells the compiler to 1. search in the directed path, 2. then go to system default path

Precompilation instruction: #include (2)

[myfunc.h]

```c
float mypow(float base, int n)
{
    float r = 1;
    int i = 0;

    if(n == 0)
    rerturn r;

    for(i = 1; i <= n; i++)
    {
        r = base*r;
    }
    return r;
}
```

[main.c]

```c
#include "myfunc.h"
#include <stdio.h>
int main()
{
   float r = mypow(3.14, 3);
   printf("r = %f\n", r);
   return 0;
}
```

Instruction for Macros: #define (1)

- #define allows user to define constants or functions
- These constants and functions can be later called in the code
- As a convention, we CAPITALIZE everything
- However, it is possible that PI is defined elsewhere

```c
#define PI 3.1415926
#include <stdio.h>
int main()
{
   float a = 0, r = 4.5;
   a = PI*r*r;
   printf("a = %f\n", a);
   return 0;
}
```

$\Longrightarrow$

After pre-compilation

```c
#define PI 3.1415926
#include <stdio.h>
int main()
{
   float a = 0, r = 4.5;
   a = 3.1415926*r*r;
   printf("a = %f\n", a);
   return 0;
}
```

Instruction for Macros: #define (2)

- However, it is possible that PI is defined elsewhere

```c
#define PI 3.1415926
#include <stdio.h>
int main()
{
   float a = 0, r = 4.5;
   a = PI*r*r;
   printf("a = %f\n", a);
   return 0;
}
```

```c
#ifndef PI
#define PI 3.1415926
#endif
#include <stdio.h>
int main()
{
   float a = 0, r = 4.5;
   a = PI*r*r;
   printf("a = %f\n", a);
   return 0;
}
```

Instruction for Macros: #define (3)

- Pay attention that the constant has NO type
- We can similarly define Macro function

```c
#define MULT(x,y) x*y+y
#include <stdio.h>
int main()
{
   float a = 2, r = 4.5;
   a = MULT(a, r);
   printf("a = %f\n", a);
   return 0;
}
```

```c
#ifndef MULT
#define MULT(x,y) x*y+y
#endif
#include <stdio.h>
int main()
{
   float a = 2, r = 4.5;
   a = MULT(a, r)*4;
   printf("a = %f\n", a);
   return 0;
}
```

- Please work out the output for each ...

Instruction for Macros: #define (4)

- Pay attention that the constant has NO type
- We can similarly define Macro function

```
#ifndef MULT
#define MULT(x,y) x*y+y
#endif
#include <stdio.h>
int main()
{
   float a = 2, r = 4.5;
   a = MULT(a, r)*4;
   printf("a = %f\n", a);
   return 0;
}
```

$\Longrightarrow$

After pre-compilation

```
#include <stdio.h>
int main()
{
   float a = 2, r = 4.5;
   a = a*r+r*4;
   printf("a = %f\n", a);
   return 0;
}
```

- It is better to put the bracket on the whole

Instruction for Macros: #define (5)

- Pay attention that the constant has NO type
- We can similarly define Macro function

```c
#ifndef MULT
#define MULT(x,y) (x*y+y)
#endif
#include <stdio.h>
int main()
{
   float a = 2, r = 4.5;
   a = MULT(a, r)*4;
   printf("a = %f\n", a);
   return 0;
}
```

$\Longrightarrow$

After pre-compilation

```c
#include <stdio.h>
int main()
{
   float a = 2, r = 4.5;
   a = (a*r+r)*4;
   printf("a = %f\n", a);
   return 0;
}
```

- It is better to put the bracket on the whole

Instruction for Macros: #define (6)

- It is literally replacement all the time

```
#ifndef HI
#define HI "hello"
#define WD world
#endif
#include <stdio.h>
int main()
{
   printf("HI");
   printf("\n");
   printf(WD);
   printf("\n");
   printf(HI);
   return 0;
}
```

[Output]

```
??
??
```

Instruction for Macros: #define (7)

- It is literally replacement all the time

```
1  #ifndef HI
2  #define HI "hello"
3  #define WD  world
4  #endif
5  #include <stdio.h>
6  int main()
7  {
8     printf("HI");
9     printf("\n");
10    //printf(WD); //<--mistake
11    printf("\n");
12    printf(HI);
13    return 0;
14 }
```

[after comment out line 10,
output]

```
1 HI
2 hello
```

Instruction for Macros: #ifdef (1)

- We can use Macro to control the compilation

```c
#define DEBUG
#include <stdio.h>
int main()
{
   int i = 0, j = 1;
   for(i = 0; i < 5; i++)
   {
      j = i*2+1;
      #ifdef DEBUG
         printf("j = %f\n", j);
      #endif
   }
   return 0;
}
```

```c
//#define DEBUG
#include <stdio.h>
int main()
{
   int i = 0, j = 1;
   for(i = 0; i < 5; i++)
   {
      j = i*2+1;
      #ifdef DEBUG
         printf("j = %f\n", j);
      #endif
   }
   return 0;
}
```

- The code is compiled inside #ifdef only when "**DEBUG**" is defined

Instruction for Macros: #ifdef (2)

- Codes after pre-compilation

```c
#define DEBUG
#include <stdio.h>
int main()
{
   int i = 0, j = 1;
   for(i = 0; i < 5; i++)
   {
       j = i*2+1;
       printf("j = %f\n", j);
   }
   return 0;
}
```

```c
//#define DEBUG
#include <stdio.h>
int main()
{
   int i = 0, j = 1;
   for(i = 0; i < 5; i++)
   {
       j = i*2+1;
   }
   return 0;
}
```

- The code is compiled inside #ifdef only when "**DEBUG**" is defined