CBE 20255
HW 10

1. Hot acid in a closed container

(1) From B.11 Table,

$(\Delta\hat{H}_m)_{H_2SO_4}$ for 30%(mol/mol) H_2SO_4 solution is

$$= \frac{[-48.99-(-41.92)]}{3-2}\cdot\left(\frac{7}{3}-2\right)+(-41.92)$$

$$= -44.28\ \mathrm{kJ/mol}$$

$$\dot{q} = (\Delta\hat{H}_m)_{H_2SO_4}\cdot 2\ \mathrm{mol}$$

$$= -88.55\ \mathrm{kJ}$$

(2) 25°C = 77°F

$$\text{Mass fraction} = \frac{0.3\times 98}{0.3\times 98+0.7\times 18} = 0.7$$

$\Delta\hat{H} = -44.28\ \mathrm{kJ/mol}\ H_2SO_4 \longrightarrow \Delta\hat{H} = -13.28\ \mathrm{kJ/mol\ solution}$

in Btu/lbm solution

$\Delta\hat{H} = \overset{135.9}{\cancel{194.32}}\ \mathrm{Btu/lbm}$

From the chart on the right,

$T_f \simeq 350\ ^\circ F = 177\ ^\circ C$

(3) C_p of H_2SO_4 solution 30% (mol/mol)

$$= \frac{(0.7647 - 0.7717)}{30.34 - 29.52} \cdot (30 - 29.52) + 0.7717$$

$$= 0.7676 \text{ cal/g} \cdot {}^\circ\text{C}$$

~~$C_{p,total} = C_{p,H_2SO_4(aq)} + C_{p,flask}$~~

$$\Delta H^\circ_m = -88.55 \text{ kJ}$$

$$\Delta H_m = (C_{p,H_2SO_4} m_{H_2SO_4} + C_{p,flask} \cdot m_{flask}) \Delta T$$

$$-88.55 \text{kJ} = (0.7676 \times 4.18 \text{ J/g} \cdot {}^\circ\text{C} \cdot 137.2 \text{g} + 3.30 \text{ J g}^{-1} {}^\circ\text{C}^{-1} \cdot 150 \text{g}) \Delta T$$

$$\longrightarrow \Delta T = 94.7 \, {}^\circ\text{C}$$

$$\text{So } T_f = T_i + \Delta T = 25^\circ\text{C} + 94.7^\circ\text{C}$$

$$= 119.7 \, {}^\circ\text{C}$$

2. Trying to concentrate

(1)

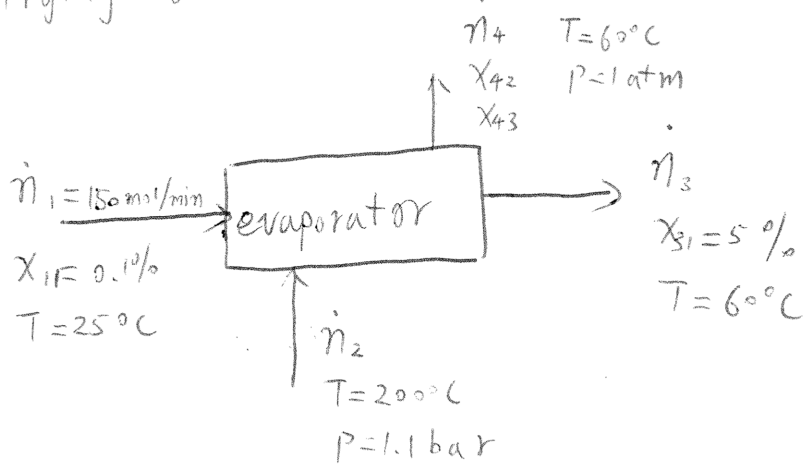
$\dot{n}_4$ T=60°C
x_{42} P=1atm
x_{43}
$\dot{n}_1$=150mol/min
x_{1}= 0.1%
T=25°C
evaporator
$\dot{n}_3$
x_{31}=5%
T=60°C
$\dot{n}_2$
T=200°C
P=1.1bar

1 = NaOH 2 = H_2O 3 = air

(2) At 60°C,

$$P^{sat}_{H_2O} = 0.1992 \text{ bar} = 0.1966 \text{ atm}$$

$$x_{42} = \frac{0.1992}{1} = 0.1992$$

$$x_{43} = 0.8008$$

(3) $$\dot{n}_2 + \dot{n}_1 = \dot{n}_3 + \dot{n}_4 \quad ①$$

$$\dot{n}_1 x_{11} = \dot{n}_3 x_{31} \quad ②$$

$$\dot{n}_2 = \dot{n}_4 x_{43} \quad ③$$

$$\dot{n}_1 x_{12} = \dot{n}_4 x_{42} + \dot{n}_3 x_{32} \quad ④$$

$$\longrightarrow \begin{cases} \dot{n}_1 = 150 \text{ mol/min} \\ \dot{n}_2 = 590.95 \text{ mol/min} \\ \dot{n}_3 = 3 \text{ mol/min} \\ \dot{n}_4 = 737.95 \text{ mol/min} \end{cases}$$

(4) $\dot{n}_2 = 590.95 \text{ mol/min}$

Assume air is ideal gas at 200°C, 1.1 bar

$$P\dot{V} = \dot{n}RT$$

$$\dot{V} = \frac{\dot{n}RT}{P} = \frac{590.95 \text{ mol/min} \cdot 8.314\times10^{-5} \text{ m}^3 \text{ bar K}^{-1} \text{ mol}^{-1} \cdot (200+273)\text{K}}{1.1 \text{ bar}}$$

$$= 21.17 \text{ m}^3/\text{min}$$

(5)

Inlet: 0.1 (mol/mol) NaOH solution at 25°C

Hot dry air at 200°C 1.1 bar

Oulet: 5% (mol/mol) NaOH at 60°C

Saturated air at 60°C 1atm

Take the inlet caustic acid solution, dry air at 25°C and H_2O at 25°C as reference.

$$\hat{H}_{0.1\% \text{ NaOH}} = 0$$

$$\hat{H}_{5\% \text{ NaOH}, 60°C} = \underset{\text{with } 20 \text{ mol } H_2O / 1 \text{ mol NaOH}}{(\Delta\hat{H}_s)_{NaOH(s)}} \frac{5}{100} - \underset{\text{with } \frac{100 \text{ mol } H_2O}{1 \text{ mol NaOH}}}{(\Delta\hat{H}_s)_{NaOH(s)}} \frac{1}{1000}$$

$$+ \int_{25°C}^{60} C_p \, dT \quad \text{(assuming as pure water)}$$

$$= -2.1 \text{ kJ/mol} + \int_{25}^{60} 75.4 \times 10^{-3} \, dT = 0.54 \text{ kJ/mol}$$

$$\hat{H}_{air,\,25°C} = 0$$

$$\hat{H}_{air,\,200°C} = \int_{25}^{200} C_p \, dT$$

$$= \int_{25}^{200} (28.94\times10^{-3} + 0.4147\times10^{-5}T + 0.3191\times10^{-8} - 1.965\times10^{-12})\, dT$$

$$= 5.154 \text{ kJ/mol}$$

$$\hat{H}_{air,\,60°C} = \int_{25}^{60} C_p \, dT = 1.02 \text{ kJ/mol}$$

$$\hat{H}_{H_2O,\,25°C,\,l} = 0$$

$$\hat{H}_{H_2O,\,60°C,\,g} = \Delta\hat{H}_v(T_b) + \int_{25°C}^{60°C} C_p \, dT$$

$$= 40.656 \text{kJ/mo} + \int_{25°C}^{60°C} (33.46\times10^{-3} + 0.6880\times10^{-5}T + 0.7604\times10^{-8} - 3.593\times10^{-12})\, dT$$

$$= 1.18 \text{ kJ/mol}$$

inlet	$\hat{H}$	outlet	$\hat{H}$
NaOH sol	0	NaOH sol	0.54 kJ/mol
dry air	5.154 kJ/mol	air	1.02 kJ/mol
		H_2O	41.84 kJ/mol

(6) Enthalpy balance :

$$\dot{n}_1 \cdot \hat{H}(\text{NaOH sol}, 0.1\%) + \dot{n}_2 \hat{H}(\text{air}, 200°\text{C}) + \dot{q}$$

$$= \dot{n}_3 \hat{H}(\text{NaOH sol}, 5\%) + \dot{n}_4 X_{42} \hat{H}(\text{H}_2\text{O}, 60°\text{C}, g)$$

$$+ \dot{n}_4 X_{41} \hat{H}(\text{air}, 60°\text{C})$$

$$\longrightarrow \dot{q} = 3709 \text{ kJ/min}$$

3. Get oily clean

(1) $\Delta \hat{H}^\circ_{f,\,C_2H_2Cl_4(l)} = \Delta \hat{H}^\circ_r + \Delta \hat{H}^\circ_{f,\,C_2H_4(g)} + \cancel{2\Delta \hat{H}^\circ_{f,\,Cl_2(g)}} - \cancel{\Delta \hat{H}^\circ_{f,\,H_2(g)}}$

$= -385.76\ kJ\ mol^{-1} + 52.28\ kJ\ mol^{-1}$

$= -333.48\ kJ/mol$

(2) $\Delta \hat{H}^\circ_{r_2} = \Delta \hat{H}^\circ_{f,\,C_2HCl_3(l)} + \Delta \hat{H}^\circ_{f,\,HCl(g)} - \Delta \hat{H}^\circ_{f,\,C_2H_2Cl_4(l)}$

$= -276.2\ kJ/mol + (-92.31\ kJ/mol) - (-333.48\ kJ/mol)$

$= -35.02\ kJ/mol$

(3) $\Delta \hat{H}^\circ_{r,\,total} = \Delta \hat{H}^\circ_{r_1} + \Delta \hat{H}^\circ_{r_2}$

$= -385.76\ kJ/mol - 35.02\ kJ/mol$

$= -420.78\ kJ/mol$

(4) $\dot{q} - \Delta \hat{H}^\circ_{r,\,total} \cdot \dot{n} = 0$

$\longrightarrow \dot{q} = -\Delta \hat{H}^\circ_{r,\,total} \cdot \dot{n} = -420.78\ kJ/mol \cdot 300\ mol/hr$

$= -1.26 \times 10^5\ kJ/hr$ removed from the process

4. A shifty reaction

(1)

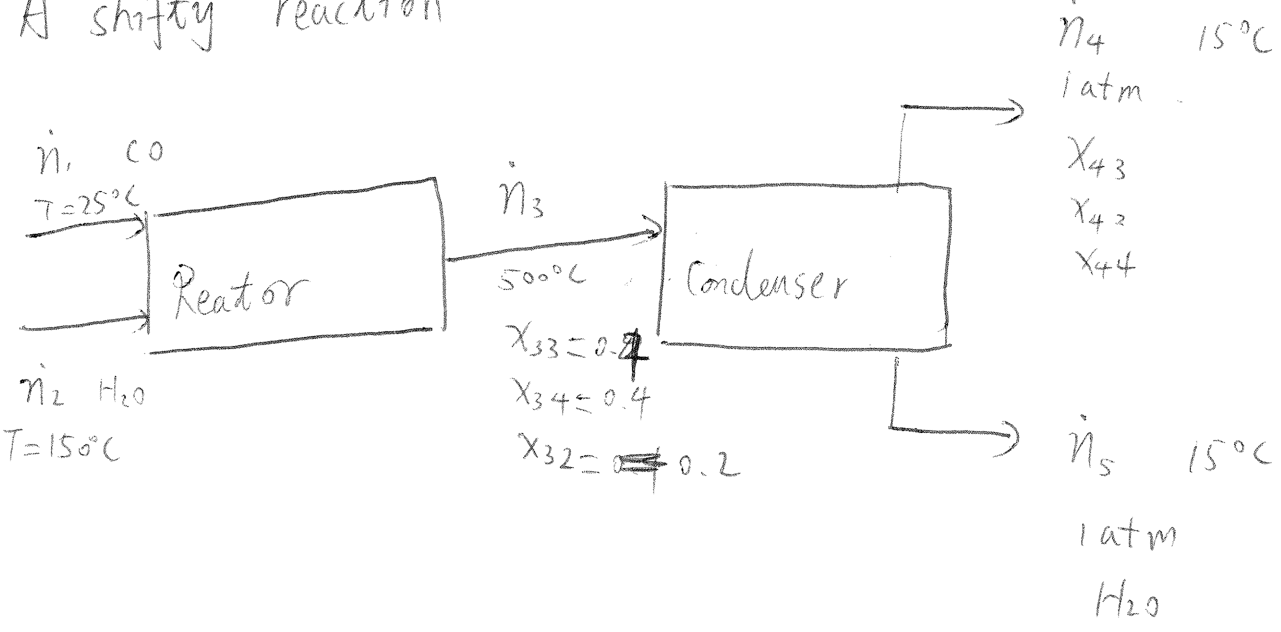

ṅ1 CO
T=25°C
Reator
ṅ2 H2O
T=150°C
ṅ3
500°C
X33=0.4
X34=0.4
X32=0.2
Condenser
ṅ4 15°C
1atm
X43
X42
X44
ṅ5 15°C
1atm
H2O

$1 = CO$ $\quad 2 = H_2O$ $\quad 3 = CO_2$ $\quad 4 = H_2$

(2) 3.5 SCM/hr

Assume ideal gas law for stream 3

$\dot{n}_3 = 148 \text{ mol/hr}$

$\dot{n}_{33} = \dot{n}_{34} = 59.2 \text{ mol/hr}$

$\dot{n}_{32} = 29.6 \text{ mol/hr}$

$\dot{n}_1 = \dot{n}_{33} = 59.2 \text{ mol/hr}$

$\dot{n}_2 = \dot{n}_{33} + \dot{n}_{32} = 88.8 \text{ mol/hr}$

Steam is in excess in order to fully consume CO to avoid atmospheric contamination.

(3) $P^{sat}_{H_2O}(15°C) = 0.0168\ atm$

$$x_{42} = \frac{0.0168\ atm}{1\ atm} = 0.0168$$

$$x_{43} = x_{44} = (1 - 0.0168)/2 = 0.4916$$

$$\dot{n}_{42} = \frac{x_{42}}{x_{43}} \cdot \dot{n}_{33} = 2.02\ mol/hr$$

$$\begin{cases} \dot{n}_5 = \dot{n}_{32} - \dot{n}_{42} = 88.8 - 2.02 = 86.8\ mol/hr \\ \dot{n}_4 = \dot{n}_{42} + \dot{n}_{33} + \dot{n}_{34} = 120.4\ mol/hr \end{cases}$$

(4) $\Delta \dot{H} = \dot{q}$

$$\Delta \dot{H} = \Delta \dot{H}(H_2O) + \Delta \dot{H}(CO_2) + \Delta \dot{H}(H_2)$$

$$\Delta \dot{H}(CO_2) = \dot{n}_{33} \int_{500°C}^{15°} C_p\, dT$$

$$= 59.2\ mol/hr \int_{500°C}^{15°C} (36.11\times10^{-3} + 4.233\times10^{-5}T - 2.887\times10^{-8}T^2 + 7.464\times10^{-12}T^3)\, dT$$

$$= -21.71\ kJ/mol \cdot 59.2\ mol/hr = -1285.2\ kJ/hr$$

$$\Delta \dot{H}(H_2) = \dot{n}_{34} \int_{500°C}^{15°} C_p\, dT$$

$$= 59.2\ mol/hr \int_{300°C}^{15°C} (28.84\times10^{-3} + 0.00765\times10^{-5} + 0.3288\times10^{-8}T^2 - 0.8698\times10^{-12}T^3)\, d$$

$$= -835.9\ kJ/hr$$

$$\Delta\dot{H}(H_2O) = \dot{n}_{42}\int_{500^\circ C}^{15^\circ C} C_p\,dT + \dot{n}_5\left(\Delta\hat{H}_v(T_b) + \int_{500^\circ C}^{100^\circ C} C_{p,g}\,dT + \int_{100^\circ C}^{15^\circ C} C_{p,l}\,dT\right)$$

$$= 2.02\,mol/hr\int_{500^\circ C}^{15^\circ C}(33.46\times10^{-3} + 0.6880\times10^{-5}T + 0.7604\times10^{-8}T^2 - 3.593\times10^{-12}T^3)\,dT$$

$$+ 86.8\,mol/hr\cdot\left(-40.656\,kJ/mol + \int_{500^\circ C}^{100^\circ C}(33.46\times10^{-3} \;----\;)\,dT + \int_{100^\circ C}^{15^\circ C}(75.4\times10^{-3})\,dT\right)$$

$$= 2.02\times(-17.348)\,\overset{kJ}{\cancel{mol}}/hr + 86.8\cdot[-40.656 + (-14.47) + (-6.4)]\,kJ/hr$$

$$= -5375.5\,kJ/hr$$

$$\text{So } \Delta\dot{H} = (-1285.2 - 835.9 - 5375.5)\,kJ/hr$$

$$= -7496.6\,kJ/hr = \dot{q} = -\overset{2.8}{\cancel{7496.6}}\,kW$$

Cooled

(5) $\Delta\hat{H}_r^\circ = \cancel{\Delta\hat{H}_f^\circ(H_2(g))} + \Delta\hat{H}_f^\circ(CO_2(g)) - \Delta\hat{H}_f^\circ(H_2O(g)) - \Delta\hat{H}_f^\circ(CO(g))$

$$= 0 + (-393.5\,kJ/mol) - (-241.83\,kJ/mol) - (-110.52\,kJ/mol)$$

$$= -41.15\,kJ/mol$$

(6) 59.2 mol/hr

(7) $\hat{H}(CO, 25°C) = \Delta\hat{H}_f^\circ(CO) = -110.52\ kJ/mol$

$\hat{H}(H_2O, 150°C) = \Delta\hat{H}_f^\circ(H_2O) + \int_{25°C}^{150°C} C_p\,dT$

$= -241.83\ kJ/mol + 4.27\ kJ/mol = -237.56\ kJ/mol$

$\hat{H}(H_2O, 500°C) = -241.83\ kJ/mol + 17.01\ kJ/mol = -224.82\ kJ/mol$

$\hat{H}(CO_2, 500°C) = -393.5\ kJ/mol + \int_{25°C}^{500°C} C_p\,dT = -372.16\ kJ/mol$

$\hat{H}(H_2, 500°C) = 0 + \int_{25°C}^{500°C} C_p\,dT = 13.83\ kJ/mol$

Inlet	$\hat{H}$	Outlet	$\hat{H}$
CO	−110.52 kJ/mol	CO_2	−372.16 kJ/mol
H_2O	−237.56 kJ/mol	H_2	13.83 kJ/mol
		H_2O	−224.82 kJ/mol

(8) $\Delta\dot{H} = \hat{H}(H_2, 500°C)\cdot\dot{n}_{34} + \hat{H}(CO_2, 500°C)\cdot\dot{n}_{33} + \hat{H}(H_2O, 500)\cdot\dot{n}_{32}$

$- \hat{H}(CO, 25°)\,\dot{n}_1 - \hat{H}(H_2O, 150°C)\,\dot{n}_2$

$= -229.7\ kJ/hr$

$\Delta \dot{H} = \dot{q} = -229.7\ kJ/hr = -0.064\ kW$

Cooled

(9)

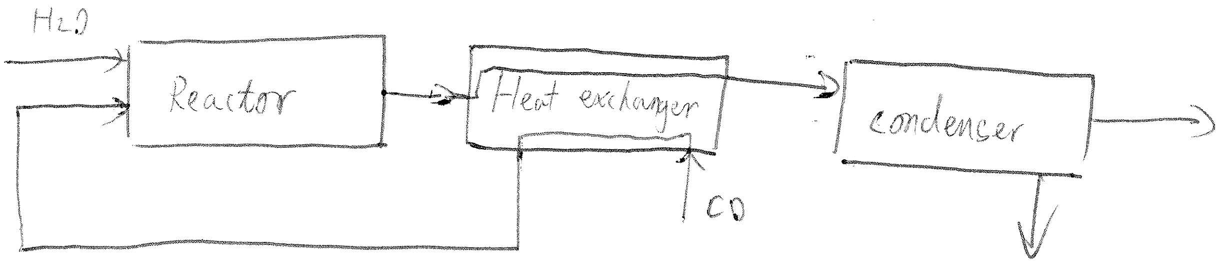
H2O
Reactor
Heat exchanger
condenser
CO

Because the condensing process requires heat releasing from reactor effluent, by applying a heat exchanger between inlet CO and reactor effluent, this part of heat can be used to heat up the CO and ~~save~~ increase reaction rate.

5. BONUS BONUS BONUS

(1)

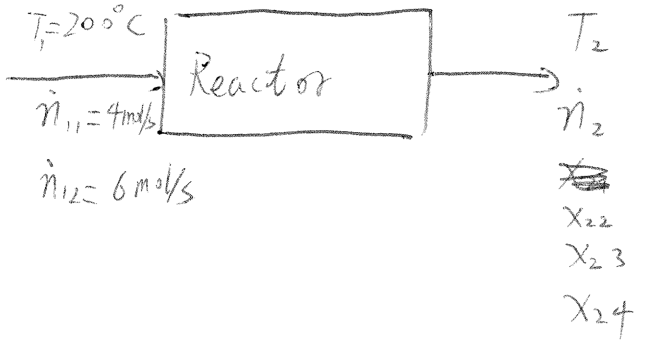

$T_1 = 200°C$
Reactor
$\dot{n}_{11} = 4$ mol/s
$\dot{n}_{12} = 6$ mol/s
T_2
$\dot{n}_2$
x_{22}
x_{23}
x_{24}

1 = NH_3 2 = O_2 3 = NO   4 = H_2O

(2) $\dot{n}_2 x_{22} = \dot{n}_{12} - \frac{5}{4}\dot{n}_{11}$ $\xi = \dot{n}_{11} \cdot 100\% = 4$ mol/s

$= 6$ mol/s $- 5$ mol/s $= 1$ mol/s

$\dot{n}_2 x_{23} = \dot{n}_{11} = 4$ mol/s

$\dot{n}_2 x_{24} = \frac{6}{4}\dot{n}_{11} = 6$ mol/s

(3) Heat of formation.

$$\hat{H}(NH_3, 200°C) = \Delta\hat{H}_f^\circ(NH_3) + \int_{25°C}^{200°C} C_p\,dT$$

$$\hat{H}(O_2, 200°C) = \Delta\hat{H}_f^\circ(O_2) + \int_{25°C}^{200} C_p\,dT$$

$$\hat{H}(O_2, T_2) = \Delta\hat{H}_f^\circ(O_2) + \int_{25°C}^{T_2} C_p\,dT$$

$$\hat{H}(NO, T_2) = \Delta\hat{H}_f^\circ(NO) + \int_{25°C}^{T_2} C_p\,dT$$

$$\hat{H}(H_2O, T_2) = \Delta\hat{H}_f^\circ(H_2O) + \int_{25°C}^{T_2} C_p\,dT$$

$$\dot{n}_{11}\hat{H}(NH_3, 200°C) + \dot{n}_{12}\hat{H}(O_2\ 200°C)$$

$$= \dot{n}_{22}\hat{H}(O_2, T_2) + \dot{n}_{23}\hat{H}(NO, T_2) + \dot{n}_{24}\hat{H}(H_2O, T_2)$$

(4) $$\hat{H}(NH_3, 200°C) = \Delta\hat{H}_f^{0}(NH_3) + \int_{25°C}^{200°C} C_p\,dT$$

$$= -46.16\,kJ/mol + \int_{25}^{200}(35.15\times10^{-3} + 2.954\times10^{-5}T + 0.4421\times10^{-8}T^2 - 6.686\times10^{-12}T^3)\,dT$$

$$= -39.42\,kJ/mol$$

$$\hat{H}(O_2, 200°C) = 0 + \int_{25°C}^{200°C}(29.10\times10^{-3} + 1.158\times10^{-5}T - 0.6076\times10^{-8}T^2 + 1.311\times10^{-12}T^3)\,dT$$

$$= 5.3\,kJ/mol$$

(5) $$\hat{H}(O_2, T_2) = \int_{25°C}^{T_2}(29.1\times10^{-3} + 1.158\times10^{-5}T - 0.6076\times10^{-8}T^2 + 1.311\times10^{-12}T^3)\,dT$$

$$\hat{H}(NO, T_2) = 90.37\,kJ/mol + \int_{25°C}^{T_2}(29.50\times10^{-3} + 0.8188\times10^{-5}T - 0.2925\times10^{-8}T^2 + 0.3652\times10^{-12}T^3)\,dT$$

$$\hat{H}(H_2O, T_2) = -241.83\,kJ/mol + \int_{25°C}^{T_2}(33.46\times10^{-3} + 0.6880\times10^{-5}T + 0.7604\times10^{-8}T^2 - 3.593\times10^{-12}T^3)\,dT$$

(6) $$\dot{n}_{11}\hat{H}(NH_3, 200°C) + \dot{n}_{12}\hat{H}(O_2, 200°C)$$

$$= 4\cdot(-39.42)\,kJ/s + 6\cdot(5.3)\,kJ/s = -125.88\,kJ/s$$

$$= \dot{n}_{22}\hat{H}(O_2, T_2) + \dot{n}_{23}\hat{H}(NO, T_2) + \dot{n}_{24}\hat{H}(H_2O, T_2)$$

To solve for final temperature, 4th order polynomial ~~function~~ equation should be solved.

(7) If only the constant terms are used,

$$-125.88 = 1\cdot 29.1\times10^{-3}\cdot(T_2-25) + 4\cdot[90.37 + 29.50\times10^{-3}\cdot(T_2-25)]$$
$$+ 6\cdot[-241.83 + 33.46\times10^{-3}\cdot(T_2-25)]$$

$$\longrightarrow T_2 = 2795°C$$

If we plug in T_2 in to enthalpy equations for different species,

$$\hat{H}(O_2, T_2) = 101.6 \text{ kJ/mol}$$

$$\hat{H}(NO, T_2) = 188.4 \text{ kJ/mol}$$

$$\hat{H}(H_2O, T_2) = -121.85 \text{ kJ/mol}$$

$$\dot{n}_{22}\hat{H}(O_2, T_2) + \dot{n}_{23}\hat{H}(NO, T_2) + \dot{n}_{24}\hat{H}(H_2O, T_2)$$

$$= 1\cdot 101.6 \text{ kJ/mol} + 4\cdot 188.4 \text{ kJ/mol} + 6\cdot(-121.85 \text{ kJ/mol})$$

$$= 124.1 >> -125.88 \text{ kJ/mol}$$

It is pretty bad ~~guess~~ estimation.