ECE 587 – Hardware/Software Co-Design
Lecture 15 Hardware Synthesis I

Professor Jia Wang
Department of Electrical and Computer Engineering
Illinois Institute of Technology

Summer 2025

Reading Assignment

- This lecture: 6
- Next lecture: 6

Outline

Hardware Synthesis

Simplified HLS Flow

Hardware Synthesis via High-Level Synthesis (HLS)

- A method to generate hardware implementations from behavioral descriptions
- Input
  - Behavioral descriptions, e.g CDFG
  - RTL library: available hardware resources
  - Design constraints
- Output: RTL netlist
  - A synchronous circuit consisting of functional units, registers, interconnects, and control logics.
- From untimed behavior to cycle-accurate behavior

RTL Architecture

- Although the output of HW synthesis is the RTL/FSM model of the component, we can divide it into pieces.
  - Facilitate reasonings/communications
  - Optimize with specialized algorithms
- Datapath
  - Perform complicate, but usually combinational, computations
  - Produce status signals for decision making
- Controller
  - Provide control signals to the datapath, e.g. to collect input data and to distribute output data
  - Interact with other components, e.g. to notify completion and to start computation once activated

Controller vs. Datapath

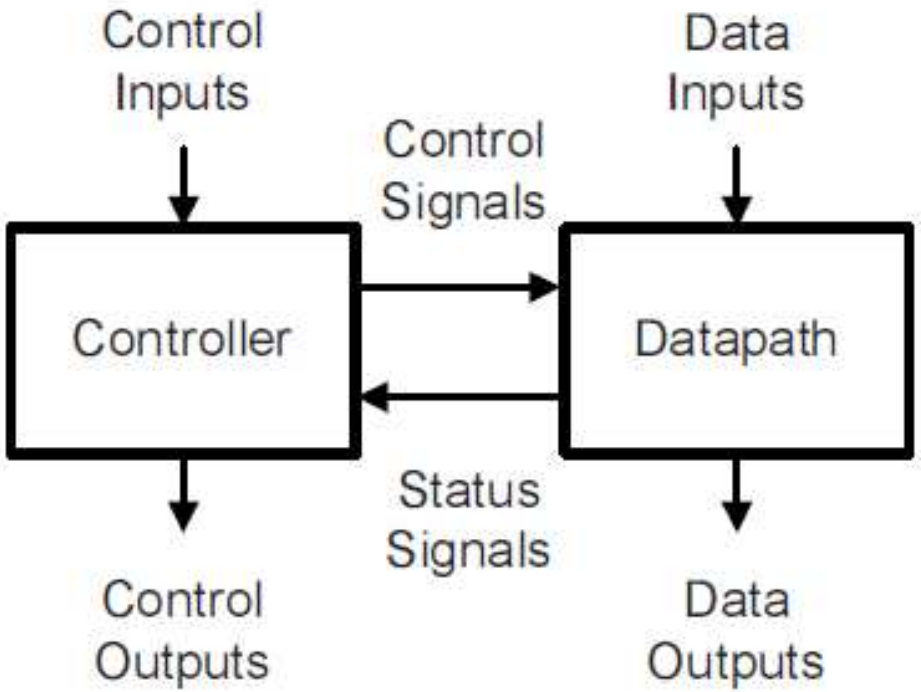

FIGURE 6.2 High-level block diagram

(Gajski et al.)

Controller vs. Datapath: A Detailed Diagram

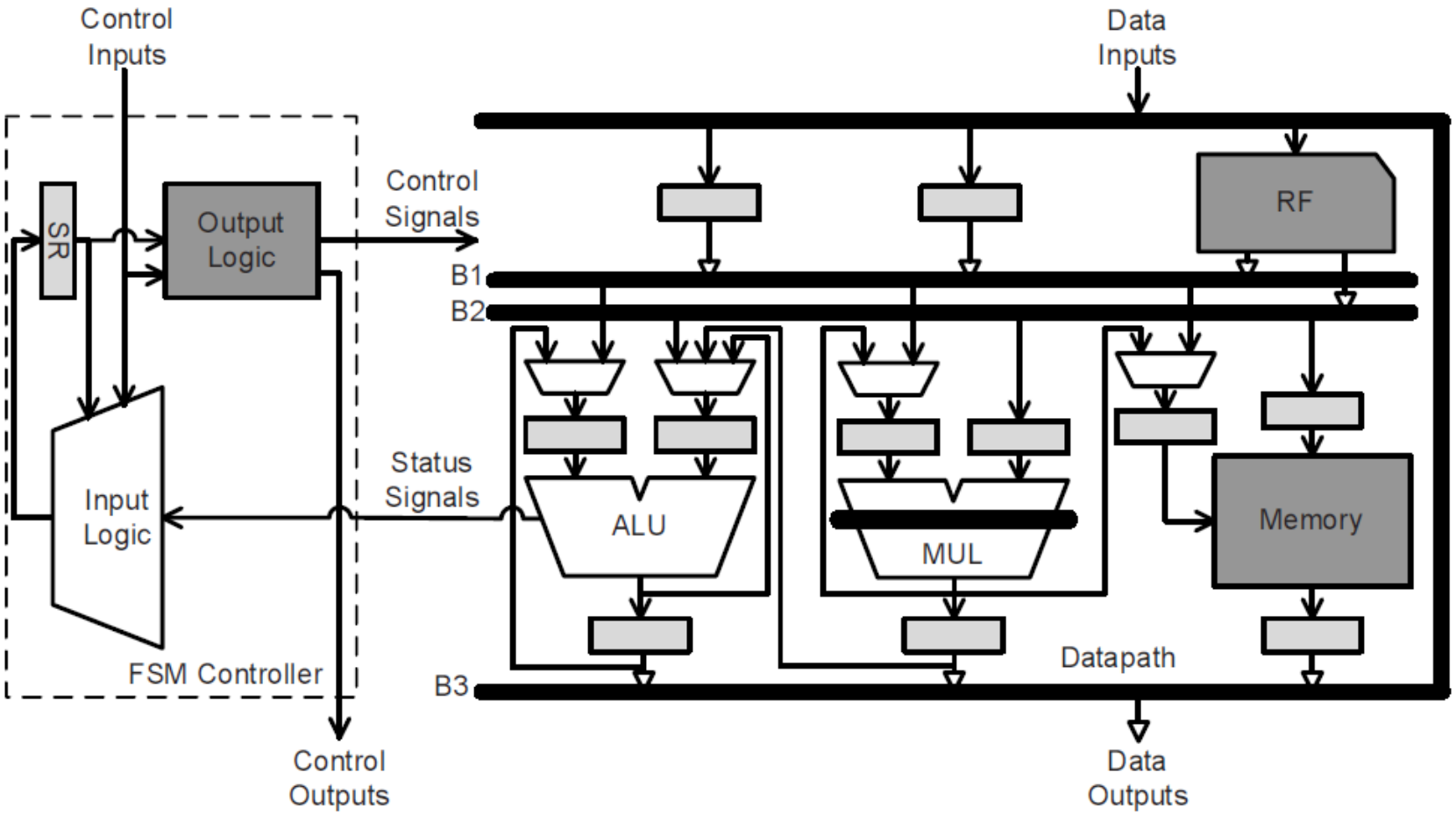

FIGURE 6.3 RTL diagram with FSM controller

(Gajski et al.)

Controller and Datapath Implementations

- The FSM of the whole HW component can be decomposed into a FSMD.
  - The controller as a FSM (much less states compared to the FSM for the whole component)
  - The datapath as data and their operations associated with each state transition
- Controller FSM
  - Current state: stored in State Register (SR)
  - State transition: computed via input logic
  - Inputs: including original inputs and status bits returned by datapath operations
  - Outputs: computed via output logic, including original outputs and signals to activate corresponding datapath operations
- Datapath
  - Registers: for data storage and pipelining
  - Functional units: for computation
  - Interconnects: shared busses and wires, plus muxes and tri-state buffers for multiplexing

HW Synthesis Design Flow

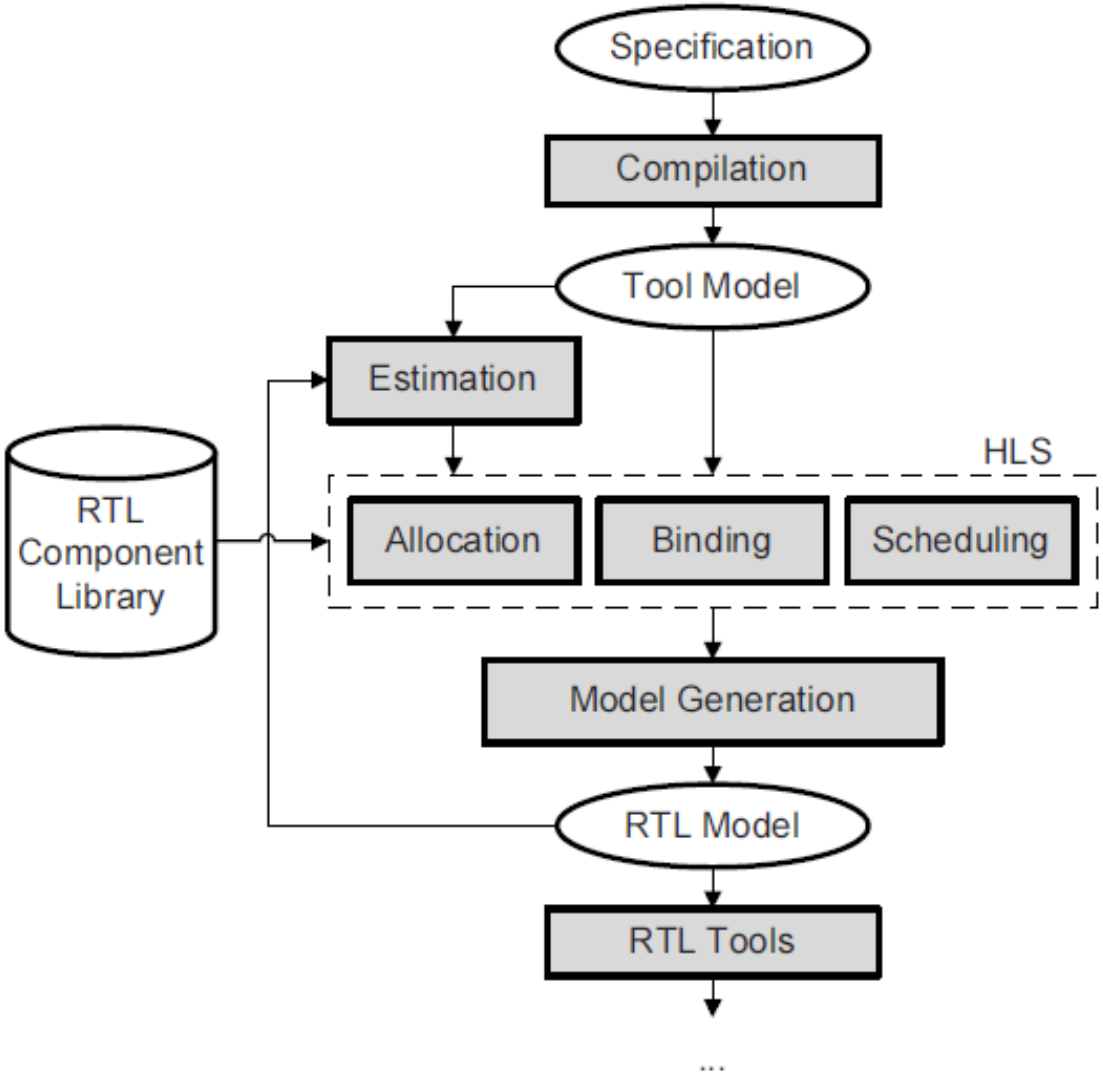

FIGURE 6.1 HW synthesis design flow

(Gajski et al.)

HLS Tasks

- Allocation: spatial aspects of the hardware system
  - Determine the type and quantity of hardware resources used
  - Directly affect chip area
- Scheduling: temporal aspects of the hardware system
  - Determine the clock period
  - Determine when (the clock cycle) the activities in CDFG should be executed
  - Directly affect total execution time
- Binding: connecting spatial and temporal aspects
  - Determine the hardware resources to execute each activities
  - Become important as metrics beyond chip area and execution time are of concern
- An optimal HLS algorithm should explore all possibilities in these tasks
  - A very difficult problem.

Possible HLS Flows

- Complete allocation/binding/scheduling sequentially
- Pre-allocation: define architecture for HW processor first
- Pre-binding: optimize register usage first
- Pre-scheduling: avoid structural dependency in inner loops first

Outline

Hardware Synthesis

Simplified HLS Flow

Simplified HLS Setting

- Input
  - Behavioral description based on DFG
  - Ignore design constraints
- Fixed allocation for functional units
  - Functional units are combinational: no pipelining, need storage units for input/output
- Scheduling
  - Fixed clock period
  - No *chaining*: no data-dependency among activities executed in one clock cycle
- Objective: generate a hardware implementation with reasonably good performance and cost

Simplified Design Flow

1. DFG generation
2. Scheduling and functional units binding
3. Storage units allocation and binding
4. Control unit synthesis

- 2 and 3 are usually known as datapath synthesis

Example Program

```
double u, w, y, dx;
int i, N;

for (i = 0; i < N; ++i) {
  double u1, u2, u3, u4, u5, u6, y1;

  u1 = u *dx;
  u2 = 5 *w;
  u3 = 3 *y;
  y1 = i *dx;
  w  = w +dx;
  u4 = u1*u2;
  u5 = dx*u3;
  y  = y +y1;
  u6 = u -u4;
  u  = u6-u5;
}
```

- Assume we need to speed-up the loop body by hardware implementations

Step 1: DFG Generation

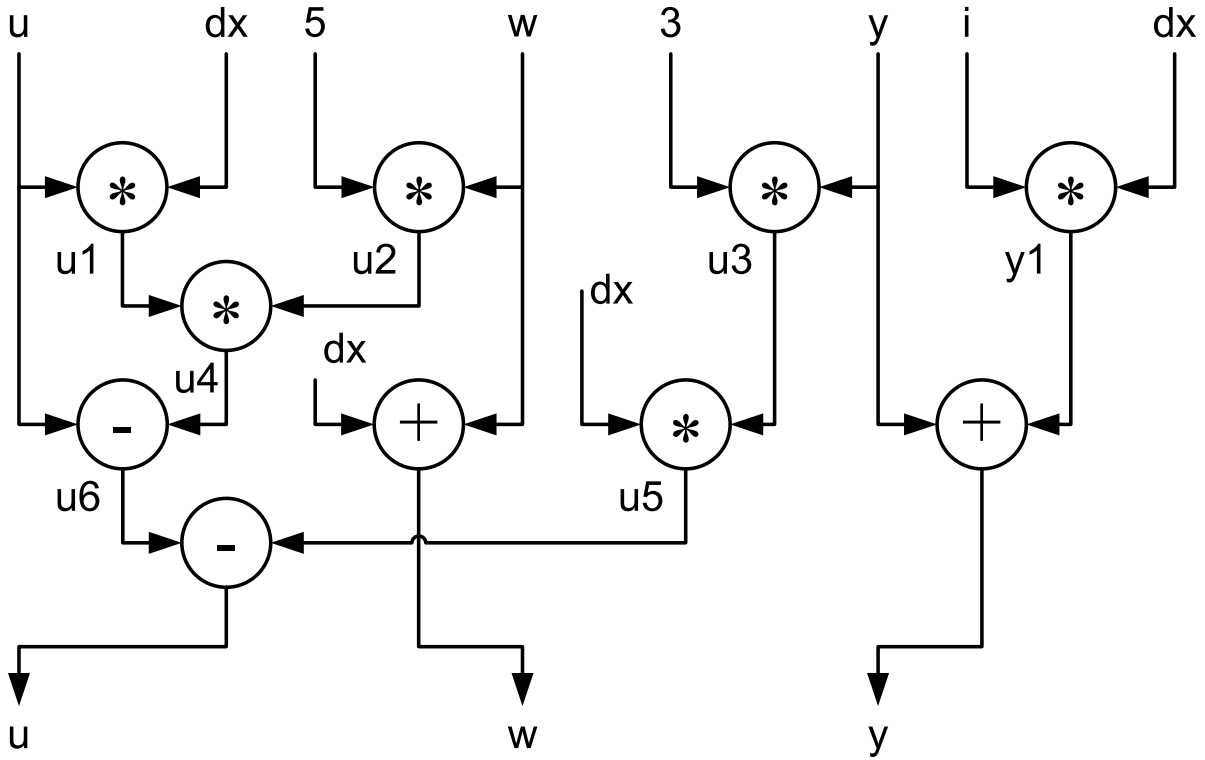

- Based on data dependency of loop body
- Vertices are operations (activities), edges are variables

Example Functional Units Allocation

- add: need 1 clock cycles to generate result
- sub: need 1 clock cycles to generate result
- mulA and mulB: need 4 clock cycles to generate result

Step 2: Scheduling and Functional Units Binding

- *Control step* (cstep): usually equivalent to a clock cycle
  - Correspond to the lifetime of a single state in the FSM representing the control unit
- Scheduling and functional units binding algorithm
  - Assign operations to functional units iteratively until all operations are assigned
  - Assume external variables to loop body (e.g. u, w, y, i, dx) are ready in cstep 0 and scheduling starts in cstep 1
  - Each iteration handles one cstep
  - Data dependency: only operations with no unfinished predecessor at the beginning of the cstep can start execution in the cstep
  - Structural dependency: subject to the availability of functional units

Control Step 1: Beginning

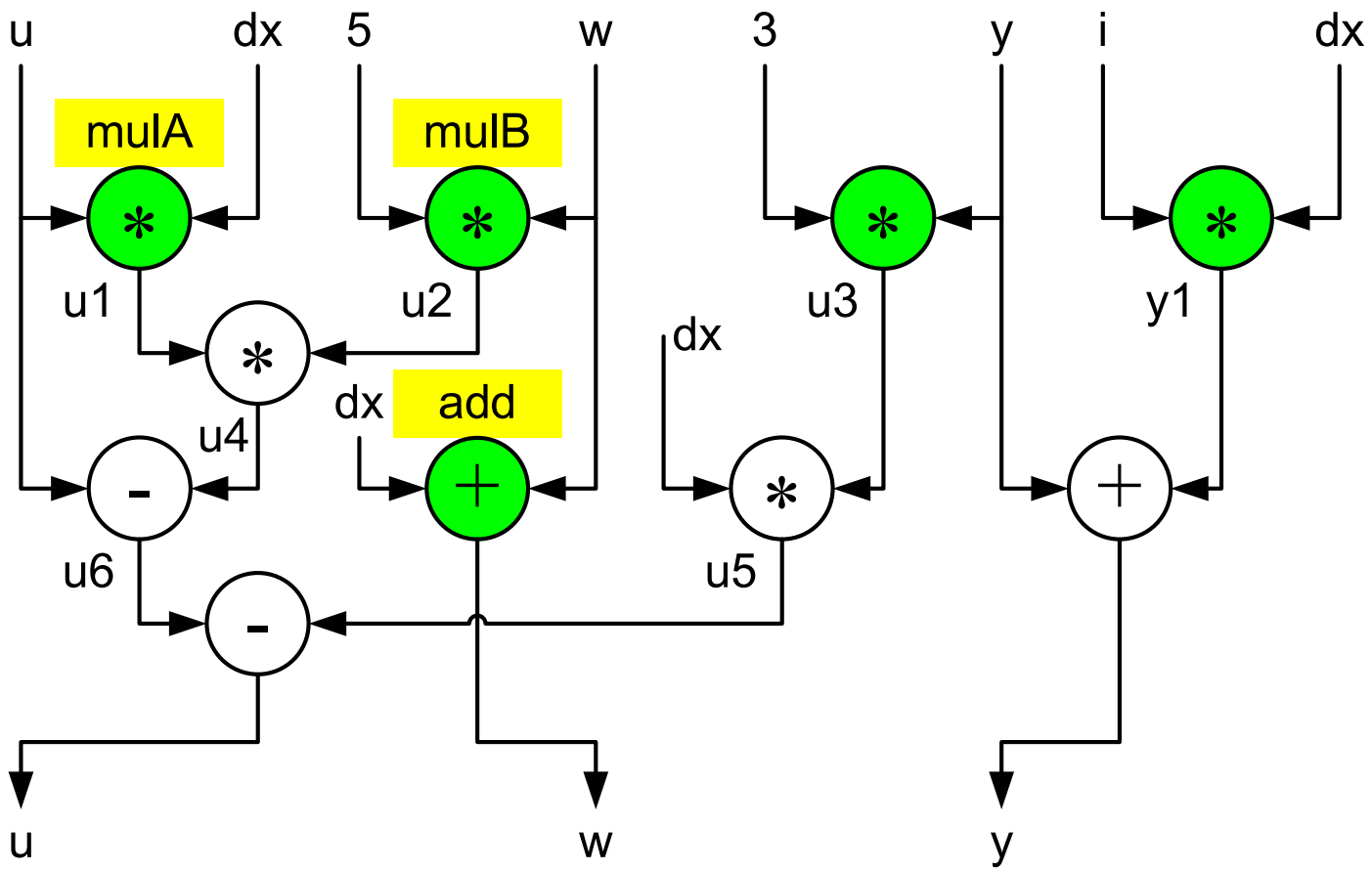

Control Step 1: Ending

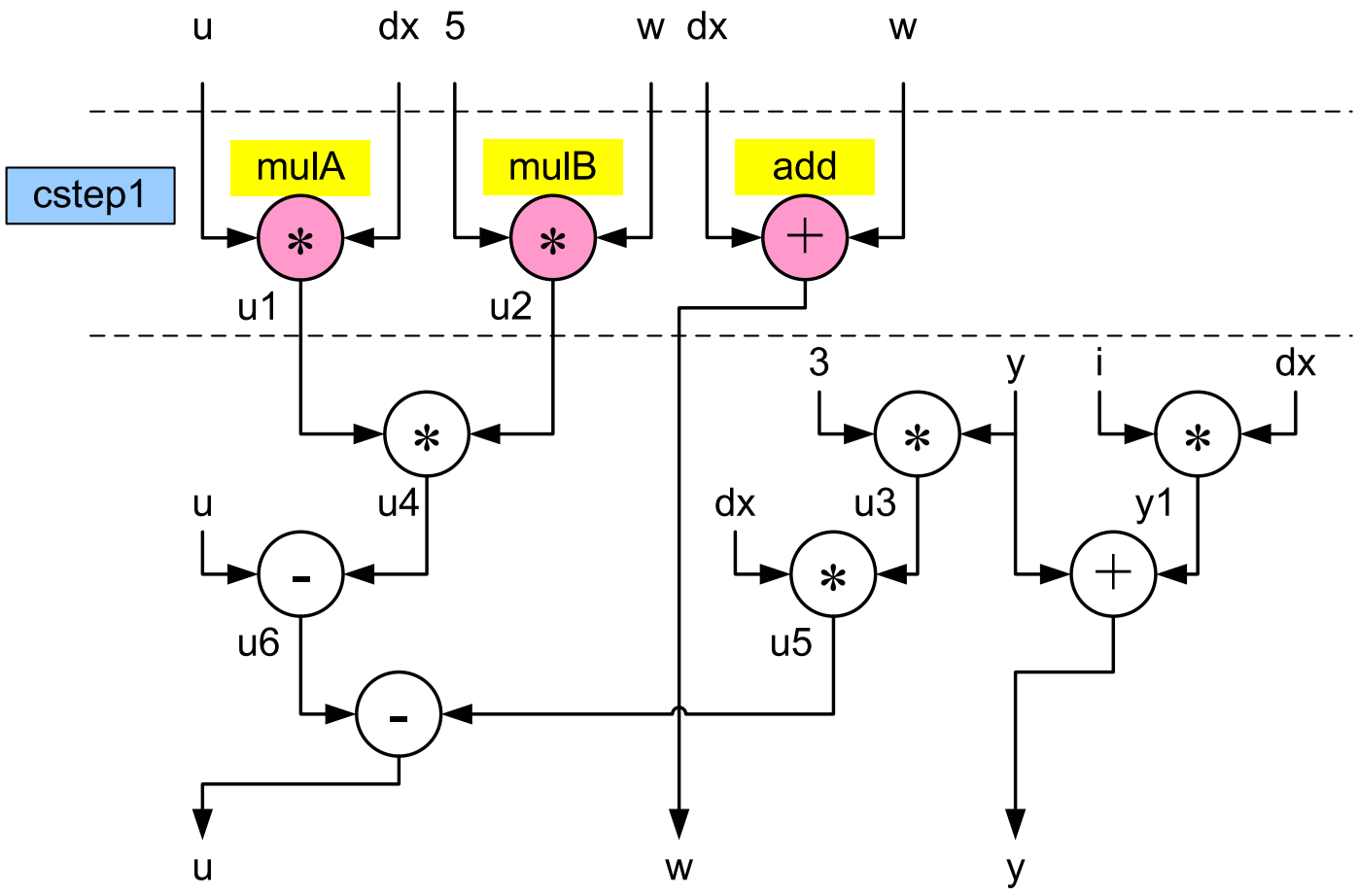

Control Step 2: Beginning

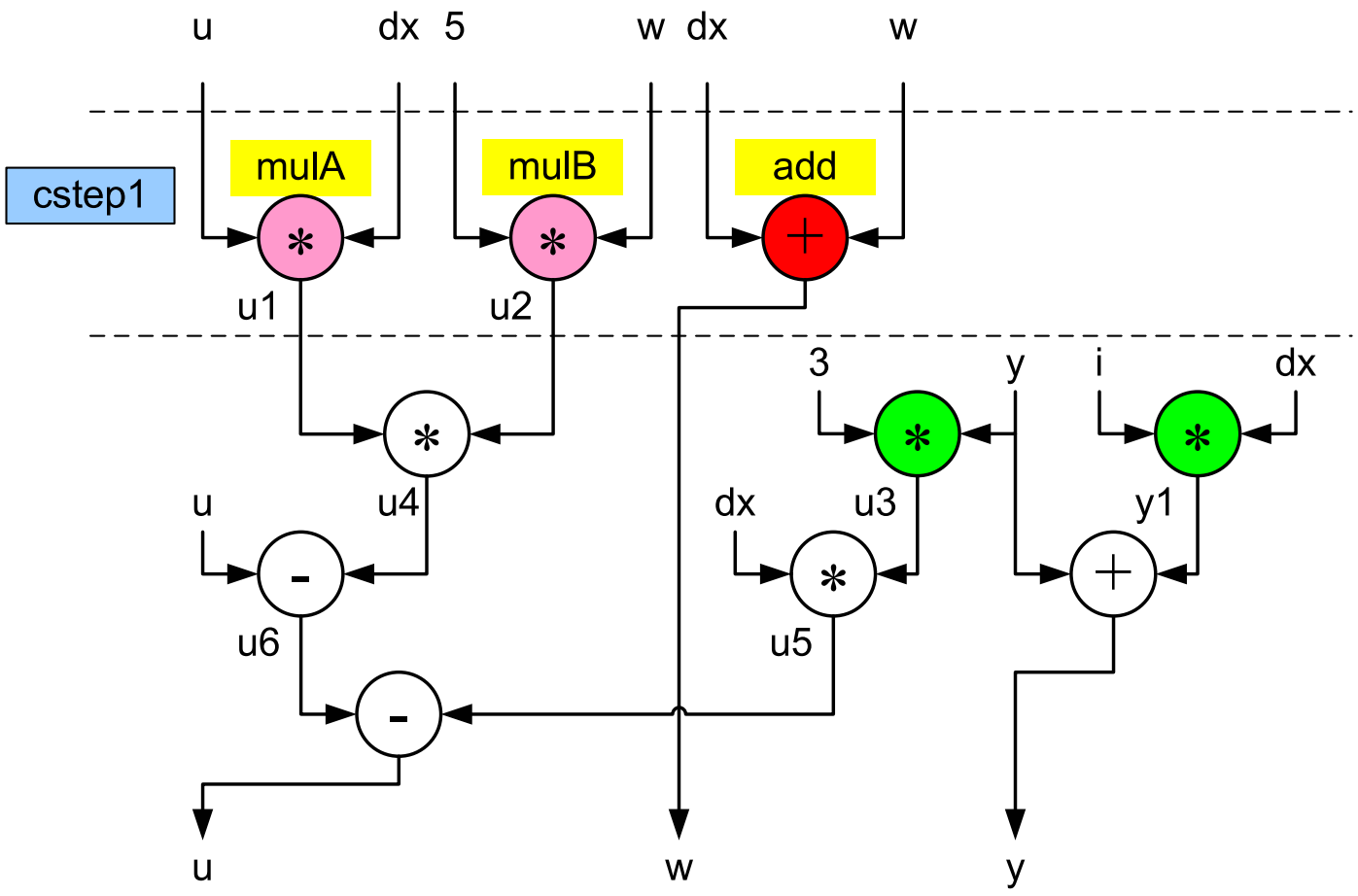

Control Step 5: Beginning

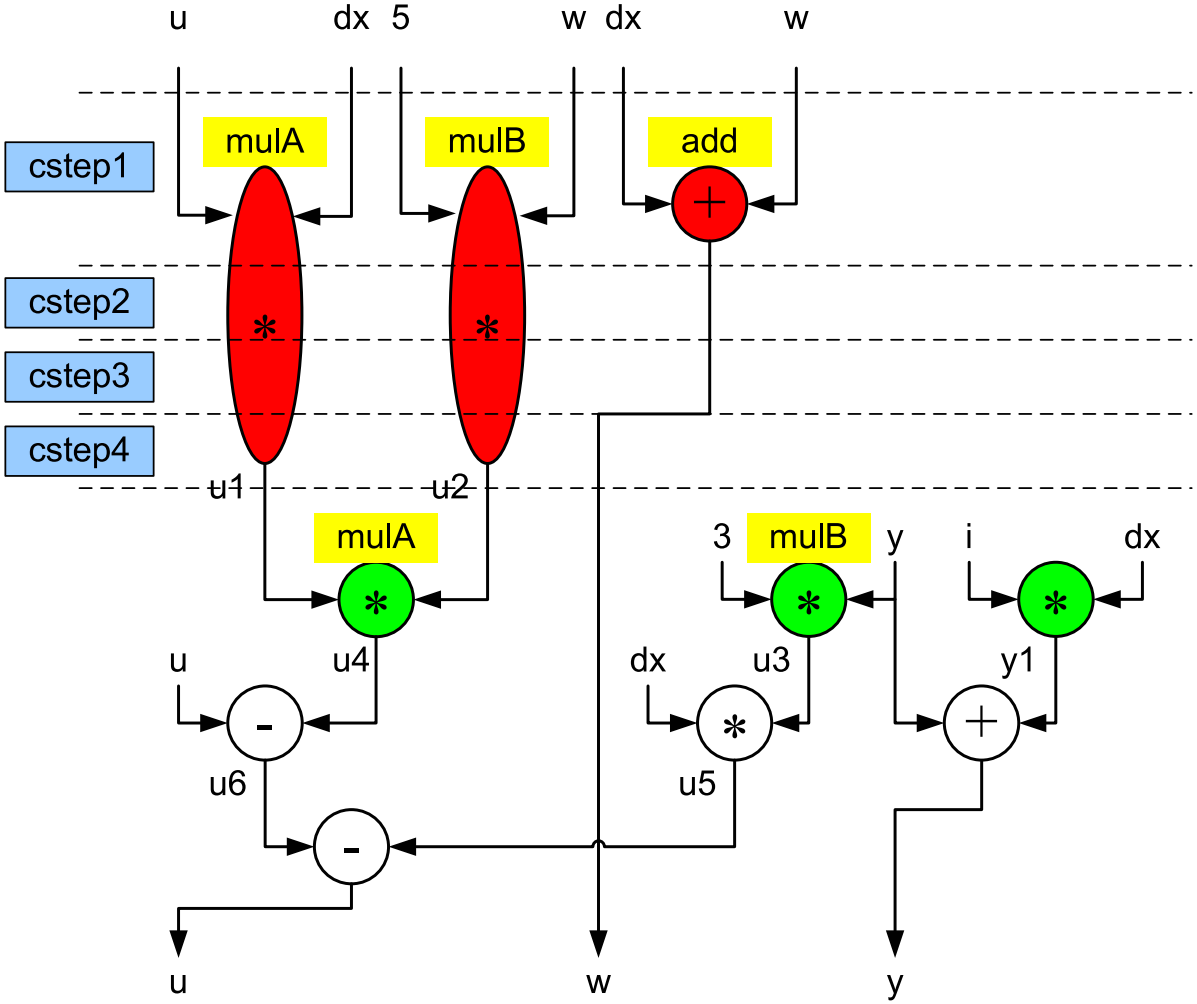

Control Step 9: Beginning

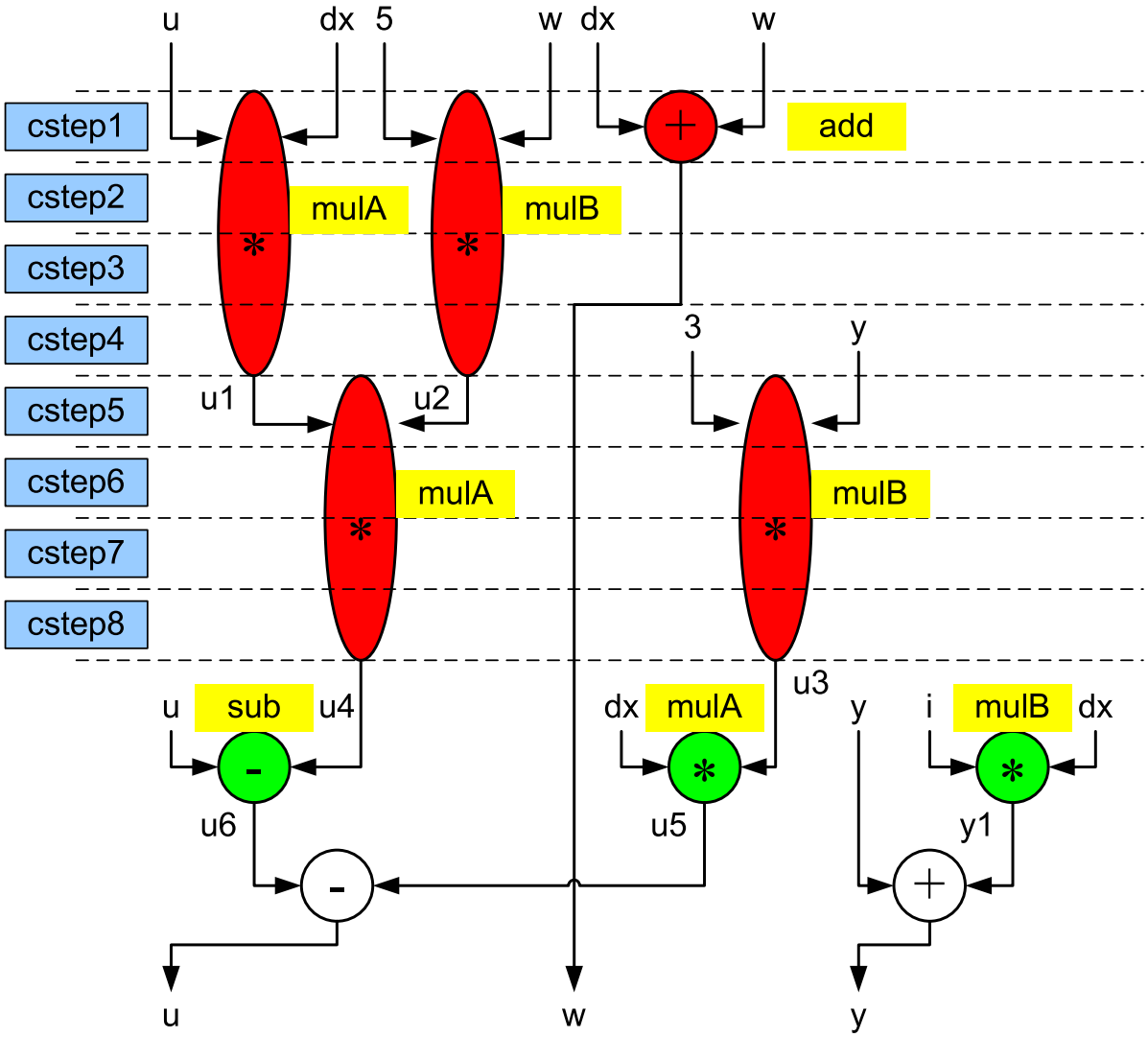

Control Step 13: Beginning

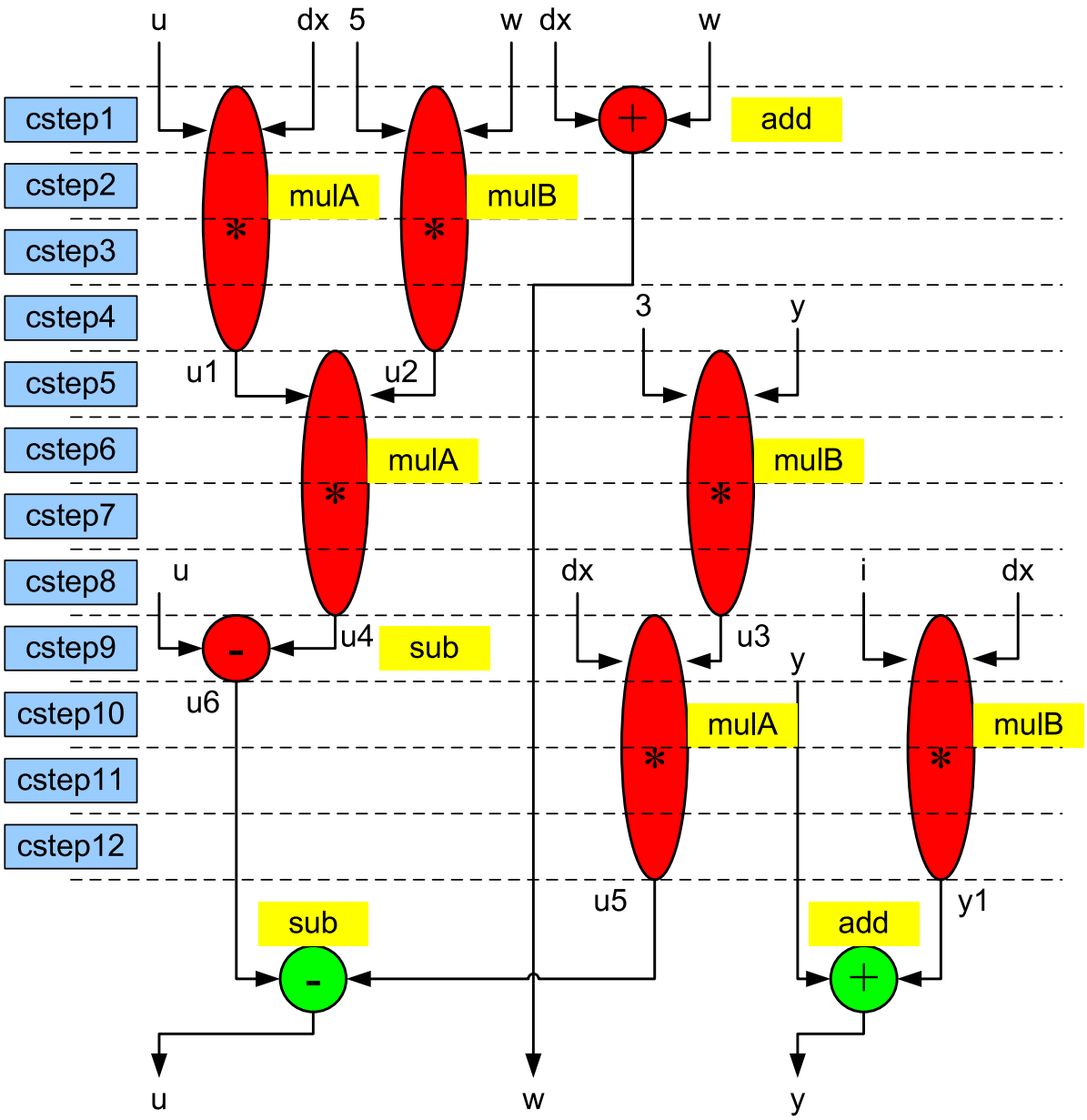

Overall Scheduling and Functional Units Binding

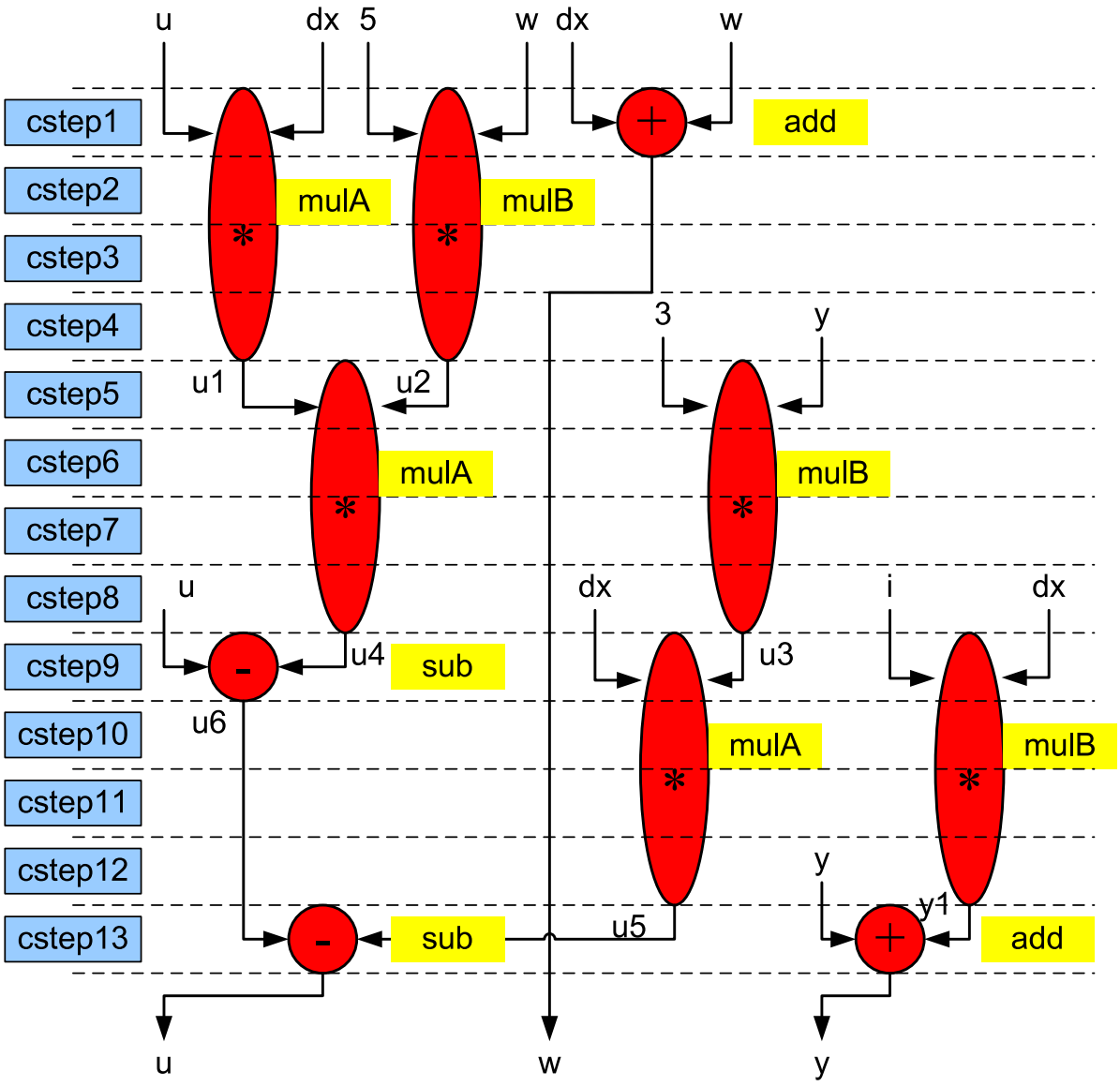

Step 3: Storage Units Allocation and Binding

- Storage units: registers (flip-flops)
- The straight-forward approach: allocate a register to each variable
  - Drawbacks: may need more than necessary number of registers, increase chip area
- Solution: share registers among variables
  - Variable *lifetime*: time interval between its definition to its last use
  - Two variables can share a register if their lifetimes don't overlap
- Assume external variables to loop body (e.g. u, w, y, i, dx) won't share registers with other variables

Variable Lifetimes

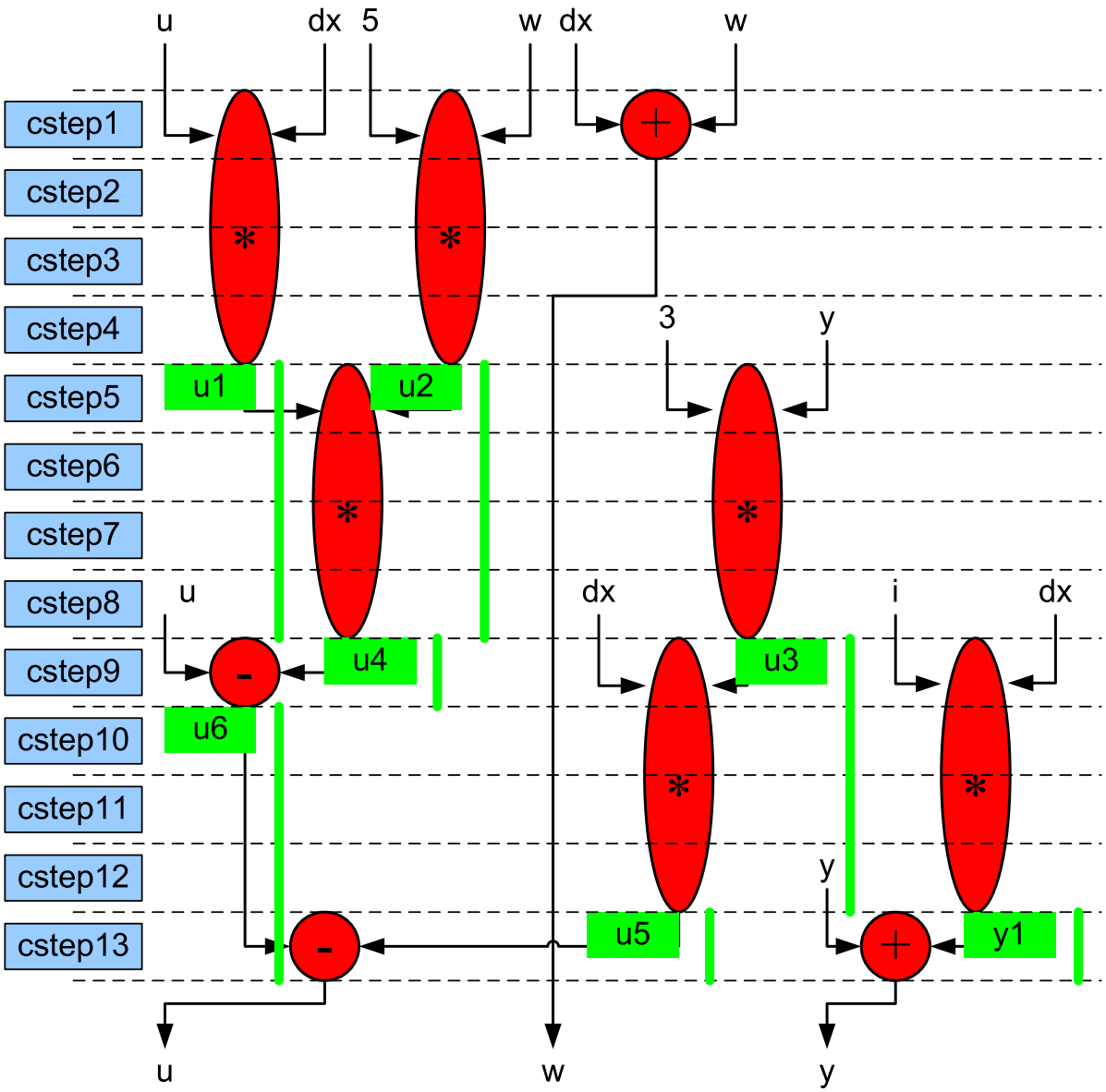

The Left Edge Algorithm for Register Allocation and Binding

1. Sort variables into a list by the starting points of their lifetimes in ascending order
2. Allocate a register R for the first variable and remove the variable from the list
3. Bind R to the first variable in the list such that there is no overlap of lifetimes and remove the variable from the list
4. Repeat 3 until no such variable exists
5. Repeat 2 to 4 until there is no variable in the list

Register Allocations

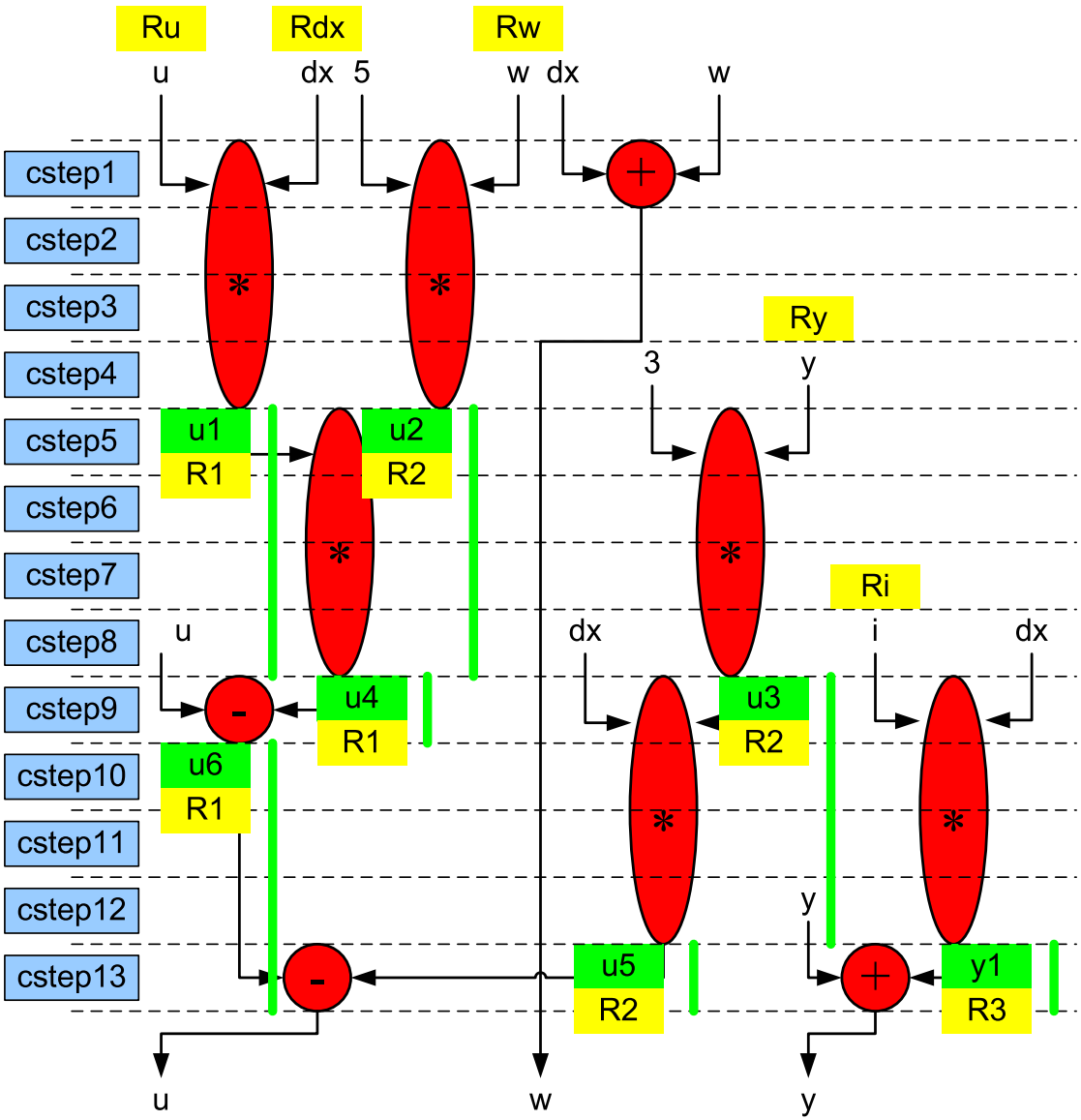

- Need 5+3=8 instead of 5+7=12 registers

Overall Scheduling and Binding

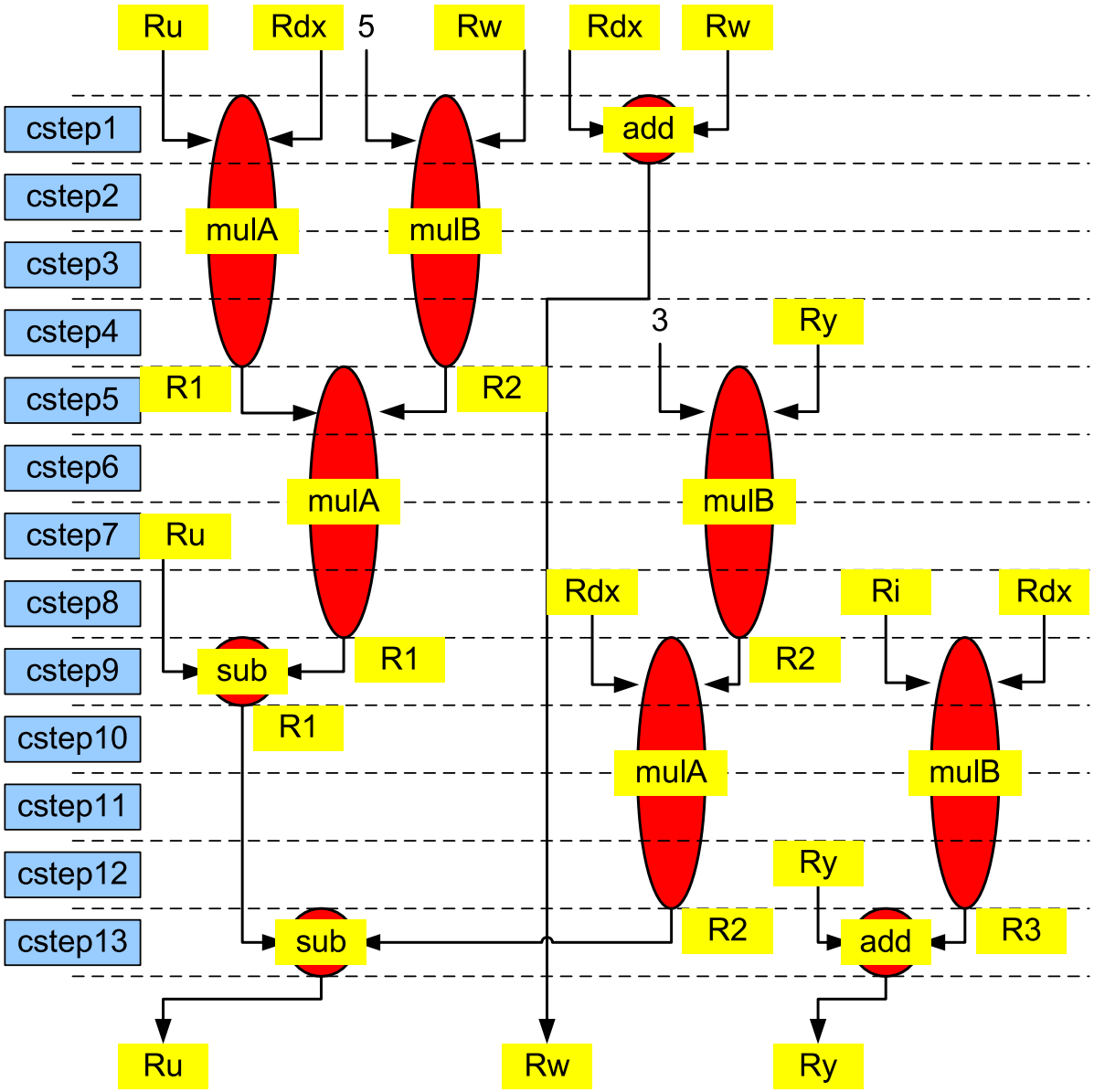

Hardware Diagram

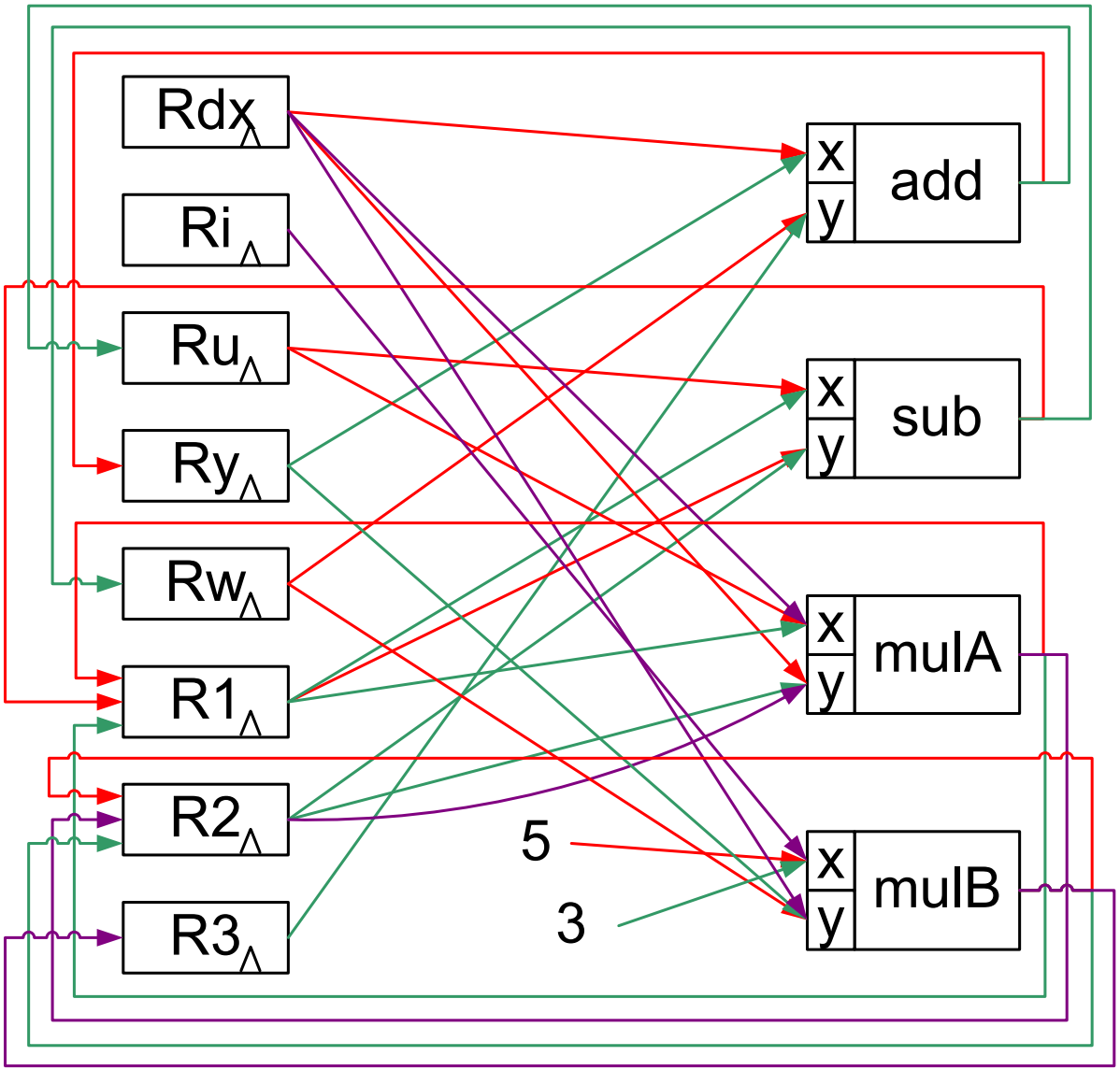

Step 4: Control Unit Synthesis

- The Diagram in the previous slide is clearly not completed
  - An input port cannot driven by multiple signals
  - A register should hold its data until being explicitly changed
- Use a mux at each input to choose the correct signal
- Control unit synthesis: design FSMs to generate the control signals for the mux's
  - State transition depends on scheduling and binding

Generate State Transitions for FSM Design

Port	csteps												
	1	2	3	4	5	6	7	8	9	10	11	12	13
mulA.x	Ru	Ru	Ru	Ru	R1	R1	R1	R1	Rdx	Rdx	Rdx	Rdx	*
mulA.y	Rdx	Rdx	Rdx	Rdx	R2	R2	R2	R2	R2	R2	R2	R2	*
Ry	Ry	Ry	Ry	Ry	Ry	Ry	Ry	Ry	Ry	Ry	Ry	Ry	add
R1	*	*	*	mulA	R1	R1	R1	mulA	sub	R1	R1	R1	*
R2	*	*	*	mulB	R2	R2	R2	mulB	R2	R2	R2	mulA	*

Summary

- Hardware synthesis is based on high-level synthesis that converts behavior specification into RTL.
- Dependencies among allocation/binding/scheduling make HLS difficult.
  - Functional units allocation affects scheduling and function units binding.
  - Scheduling and function units binding affects storage units allocation and binding.
  - Scheduling and binding affects control unit design.