ECE 587 – Hardware/Software Co-Design
Lecture 19
Neural Networks and Systolic Array

Professor Jia Wang
Department of Electrical and Computer Engineering
Illinois Institute of Technology

Summer 2025

Outline

Neural Networks

Systolic Array

Gemmini

Reading Assignment

- This lecture: Neural Networks and Systolic Array
- Next lecture: Quantization

Outline

Neural Networks

Systolic Array

Gemmini

(Artificial) Neural Networks

- A model of computation inspired by biological neurons.
  - Still, we don't know how biological neural networks work.
  - Dated back to 1940's but with a few AI winters.
- Substantial progress since the last decade.
  - Availability of large amount of data.
  - Availability of GPUs for general-purpose computing.
- Most neural networks are DFGs.
  - Feedforward, uni-directional, without cycles or loops.
  - A node compute its output as a simple function of its inputs, e.g. weighted summation, activation, and softmax.
  - Together, any vector-valued function can be approximated.
- Layers: tremendous number of nodes are organized into layers to facilitate reasoning and implementation.
  - Layers are ordered so that outputs from previous layers are used as inputs to next layers.

A Typical Layer

$$\boldsymbol{h} = g(\boldsymbol{W}^\top \boldsymbol{x} + \boldsymbol{b})$$

- $\boldsymbol{x}$: input vector of this layer
- $\boldsymbol{h}$: output vector of this layer
- $\boldsymbol{W}$, $\boldsymbol{b}$: weight matrix and bias vector
  - Could be fixed paramaters or inputs to the layer.
- g: activation function
  - A fixed nonlinear function applied element-wise to a vector.
- Learning by approximating known input/output relations.
  - Find a good number of layers and then $\boldsymbol{W}$ and $\boldsymbol{b}$ for each layer.
  - Challenge: generalization – the learned model should also perform nicely on unseen inputs.
  - Deep learning: models with more layers tend to generalize better as they require less dimension in $\boldsymbol{W}$ and $\boldsymbol{b}$.

Computation vs. Communication

$$\boldsymbol{h} = g(\boldsymbol{W}^\top \boldsymbol{x} + \boldsymbol{b})$$

- Use simple assumptions to predict bottlenecks for neural network hardware accelerators.
- Assume $\boldsymbol{x}$ to be a $N \times 1$ vector and $\boldsymbol{W}$ to be a $N \times N$ matrix.
- Computation
  - $N \times N$ multiply–accumulate operations (MACs).
  - N activations.
- Communication
  - Assume $\boldsymbol{W}$ cannot all fit into memory but $\boldsymbol{x}$ and $\boldsymbol{b}$ can.
  - $2N$ to load $\boldsymbol{x}$ and $\boldsymbol{b}$ into memory.
  - $N \times N$ to process $\boldsymbol{W}$ column by column.
  - N to output $\boldsymbol{h}$.
- Too few computation per communication $(1:1)$
  - Difficult to design efficient hardware accelerators.
- Can we increase the computation-to-communication ratio?

Batch Processing

$$\boldsymbol{H} = g(\boldsymbol{W}^\top \boldsymbol{X} + \boldsymbol{B})$$

- There are cases where outputs are computed from multiple (M) inputs for the same neural network, e.g. for training.
  - $M << N$ so that $\boldsymbol{X}$ and $\boldsymbol{B}$ can fit into memory.
- $\boldsymbol{H}$, $\boldsymbol{X}$, $\boldsymbol{B}$ are $N \times M$ matrices while $\boldsymbol{W}$ is $N \times N$ matrix.
- Computation
  - $M \times N \times N$ multiply–accumulate operations (MACs).
  - $M \times N$ activations.
- Communication
  - $N + N \times M$ to load $\boldsymbol{X}$ and $\boldsymbol{B}$ into memory.
  - $N \times N$ to process $\boldsymbol{W}$ column by column.
  - $N \times M$ to output $\boldsymbol{H}$ row by row.
- Better computation-to-communication ratio $M : 1$.

Convolutional Neural Networks

$$\boldsymbol{h} = g(\boldsymbol{W}^\top \boldsymbol{x} + \boldsymbol{b})$$

- $\boldsymbol{x}$ may have internal structures for particular applications.
  - E.g. 3-D (width/height/channels) for images.
- $\boldsymbol{W}$ maybe designed specifically for such structure.
  - With less freedom to improve generalization.
  - E.g. convolution where weighted summations are computed from a small moving window of $\boldsymbol{x}$ via identical kernels.
- Computation: reduced as many elements of $\boldsymbol{W}$ are 0.
  - kN assuming each element of $\boldsymbol{x}$ corresponds to k non-zeros in $\boldsymbol{W}$ with $k << N$.
- Communication: reduced as $\boldsymbol{W}$ can fit into memory.
  - $2N$ to input $\boldsymbol{x}$ and output $\boldsymbol{h}$
- Better computation-to-communication ratio $k : 1$

Outline

Neural Networks

Systolic Array

Gemmini

Systolic Array

- An array of processing elements (PEs) with highly regular layout and local interconnects.
  - To match dataflow of a particular computational task.
  - Without the need to load/store intermediate results frequently.
  - E.g. for matrix-matrix multiplication.
- Support massively parallel datapath computing via scaling.
  - Communications between PEs should be local.
  - Avoid complex control logics when reusing data.

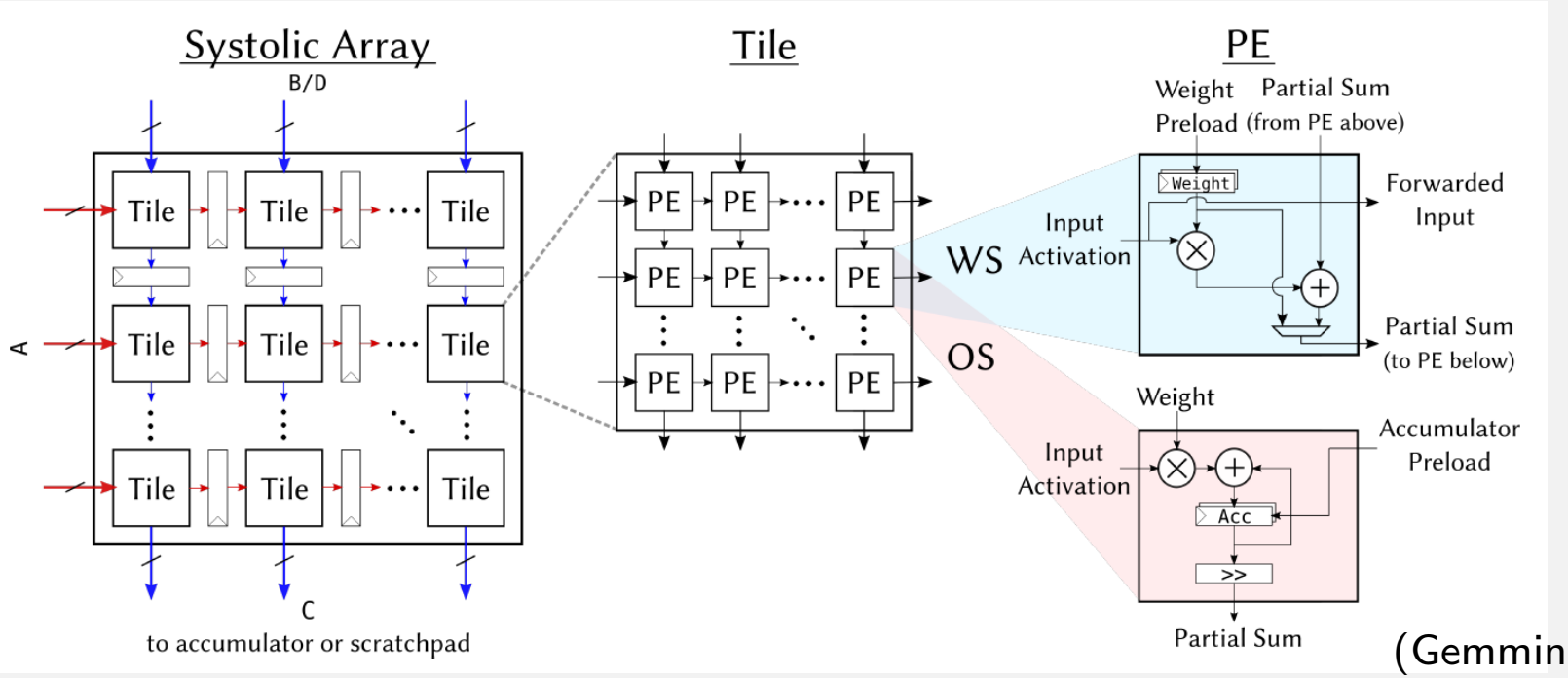

(Gemmini)

Matrix Multiplication $\boldsymbol{C} = \boldsymbol{AB} + \boldsymbol{D}$

$$\begin{pmatrix} c_{11} & c_{12} \\ c_{21} & c_{22} \\ \dots & \dots \end{pmatrix} = \begin{pmatrix} a_{11} & a_{12} \\ a_{21} & a_{22} \\ \dots & \dots \end{pmatrix} \begin{pmatrix} b_{11} & b_{12} \\ b_{21} & b_{22} \end{pmatrix} + \begin{pmatrix} d_{11} & d_{12} \\ d_{21} & d_{22} \\ \dots & \dots \end{pmatrix}$$

$$\begin{aligned} c_{11} &= a_{11}b_{11} + a_{12}b_{21} + d_{11}, & c_{12} &= a_{11}b_{12} + a_{12}b_{22} + d_{12}, \\ c_{21} &= a_{21}b_{11} + a_{22}b_{21} + d_{21}, & c_{22} &= a_{21}b_{12} + a_{22}b_{22} + d_{22}, \\ & \dots, & & \dots, \end{aligned}$$

- Consider a simple case where size of $\boldsymbol{B}$ is small.
  - E.g. a 2×2 matrix.
- Weight-stationary dataflow
  - Preload $\boldsymbol{B}$ into the accelerator.
  - Process $\boldsymbol{A}$, $\boldsymbol{D}$, and $\boldsymbol{C}$ row by row.

Array Design for Weight-Stationary Dataflow

$$c_{11} = a_{11}b_{11} + a_{12}b_{21} + d_{11}, \quad c_{12} = a_{11}b_{12} + a_{12}b_{22} + d_{12},$$
$$c_{21} = a_{21}b_{11} + a_{22}b_{21} + d_{21}, \quad c_{22} = a_{21}b_{12} + a_{22}b_{22} + d_{22},$$
$$\ldots, \quad \ldots,$$

- Use an array of multiply-accumulate (MAC) PEs.
  - Each PE completes one MAC operation per clock cycle.
- Match the shape of the array to that of $\boldsymbol{B}$.
  - Each PE performs multiplications with one fixed element of $\boldsymbol{B}$.
- How to connect PEs? How to schedule and bind operations?
  - So that the design can be scaled to larger arrays.
  - Need to avoid global interconnects and complex control logics.

Example: 2×2 Systolic Array

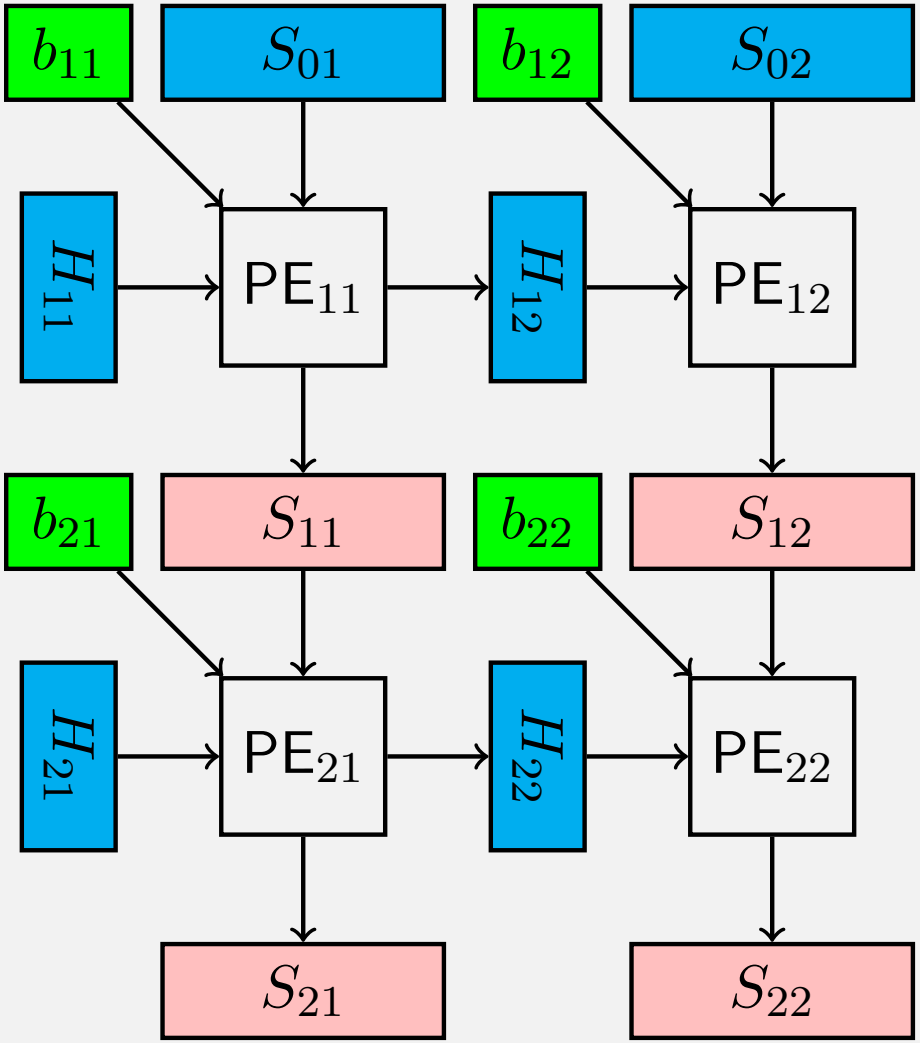

- Registers are colored.
- Preload $\boldsymbol{B}$ to green registers.
- For each cycle (next state),
  - Load a row of $\boldsymbol{A}$ into H_{11}, H_{21}
  - Load a row of $\boldsymbol{D}$ into S_{01}, S_{02}
  - Store S_{21}, S_{22} into a row of $\boldsymbol{C}$
  - $H_{12} \leftarrow H_{11}$, $H_{22} \leftarrow H_{21}$
  - $S_{11} \leftarrow b_{11} * H_{11} + S_{01}$
  - $S_{12} \leftarrow b_{12} * H_{12} + S_{02}$
  - $S_{21} \leftarrow b_{21} * H_{21} + S_{11}$
  - $S_{22} \leftarrow b_{22} * H_{22} + S_{12}$
- Local interconnects.
- Simple control logics.

Example: Cycle 1

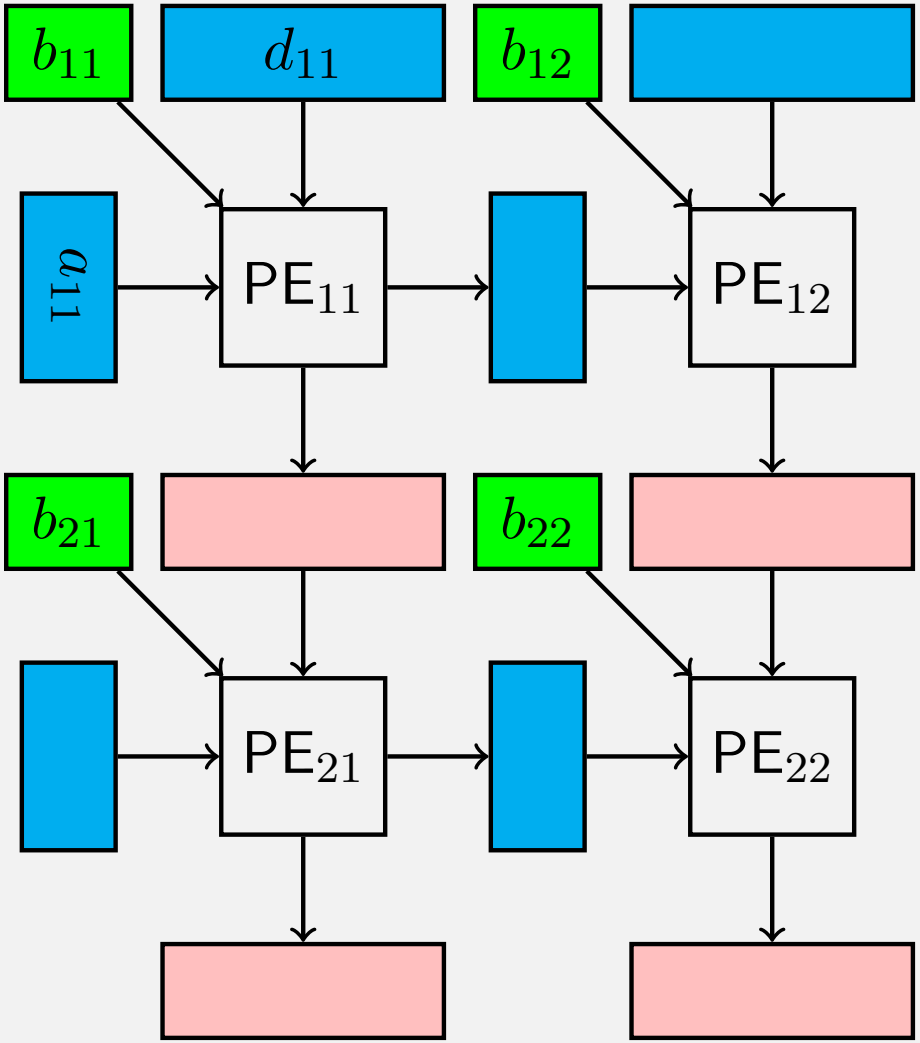

- Actually, rows of $\boldsymbol{A}$, $\boldsymbol{D}$, and $\boldsymbol{C}$ are staggered for load/store.
  - a_{11} and d_{11} become available at the beginning of the first cycle.

Example: Cycle 2

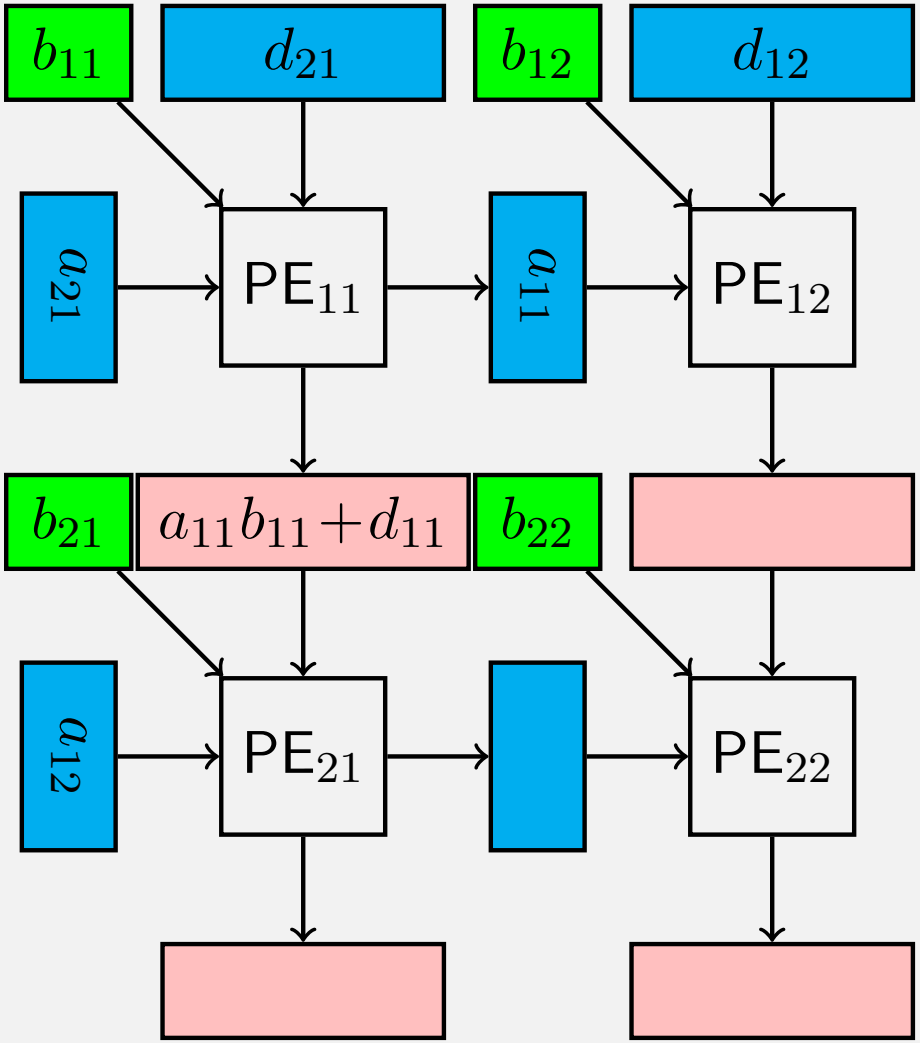

- $c_{11} = a_{11}b_{11} + a_{12}b_{21} + d_{11}$ will be stored next cycle.

Example: Cycle 3

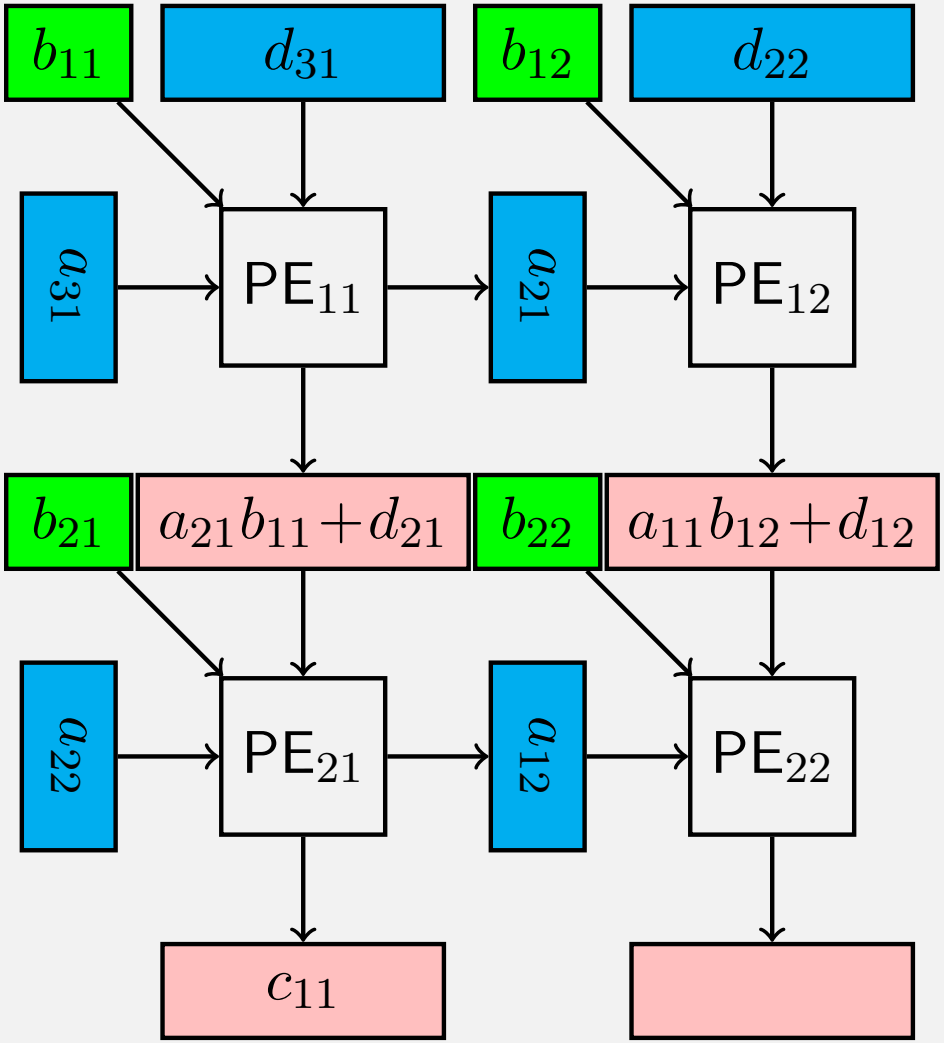

- $c_{21} = a_{21}b_{11} + a_{22}b_{21} + d_{21}$ will be available next cycle.
- $c_{12} = a_{11}b_{12} + a_{12}b_{22} + d_{12}$ will be available next cycle.

Example: Cycle 4

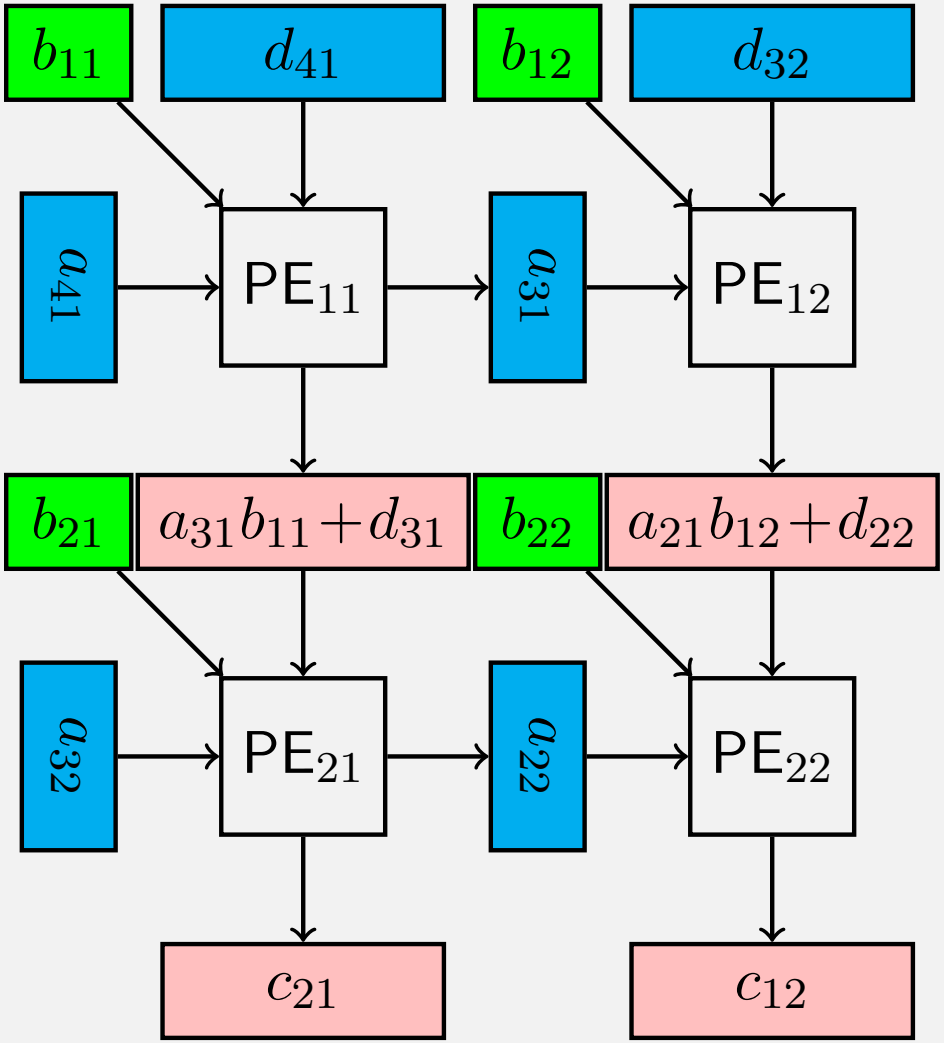

- $c_{31} = a_{31}b_{11} + a_{32}b_{21} + d_{31}$ will be available next cycle.
- $c_{22} = a_{21}b_{12} + a_{22}b_{22} + d_{22}$ will be available next cycle.
- Eventually, 2 cycles after loading all rows of $\boldsymbol{A}$ and $\boldsymbol{D}$, all rows of $\boldsymbol{C}$ are computed and stored.

Additional Details

- It seems 3 PEs are idle for Cycle 1.
  - Keep PEs always busy to improve utilization.
- What if we need to compute another set of $\boldsymbol{C} = \boldsymbol{AB} + \boldsymbol{D}$?
  - PEs could be kept busy by preloading this set of $\boldsymbol{B}$ while computing with the previous set.
- Double buffer: provide two sets of storage for $\boldsymbol{B}$
  - Compute with one set of $\boldsymbol{B}$ while preload the next set.
  - Preload $\boldsymbol{B}$ by shifting rows in a staggered manner to match the loading pattern of $\boldsymbol{A}$.
  - Tag elements of $\boldsymbol{B}$ to indicate which set to use and to stop shifting once elements reach their desiginated PEs.
- What about multiplying matrices with arbitrary sizes?
  - Use block matrix multiplication to decompose the computation into smaller matrix multiplications that fit into the array.

Block Matrix Multiplication

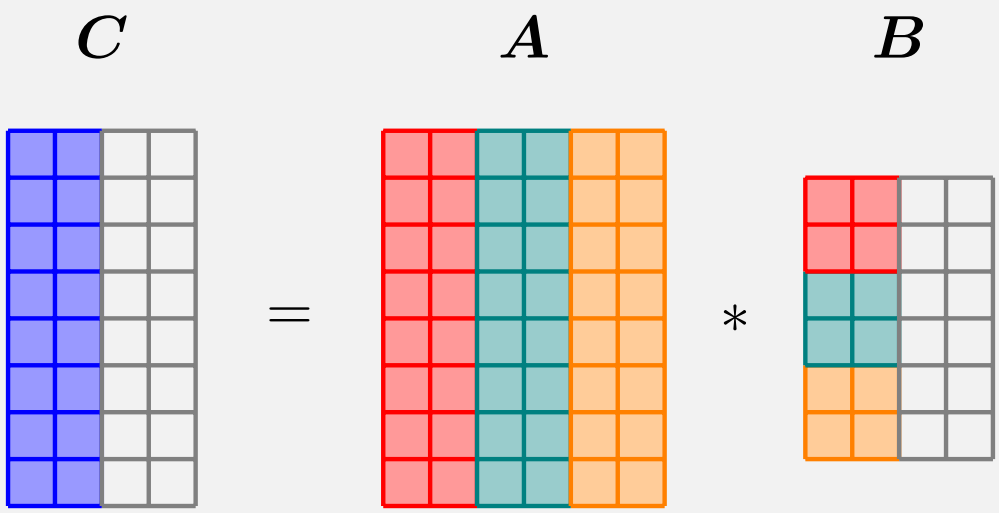

- $\boldsymbol{C}[1:8, 1:2]$ can be computed in 3 array multiplications.
  1. $\boldsymbol{C}[1:8, 1:2] = \boldsymbol{A}[1:8, 1:2]\boldsymbol{B}[1:2, 1:2]$
  2. $\boldsymbol{C}[1:8, 1:2] = \boldsymbol{A}[1:8, 3:4]\boldsymbol{B}[3:4, 1:2] + \boldsymbol{C}[1:8, 1:2]$
  3. $\boldsymbol{C}[1:8, 1:2] = \boldsymbol{A}[1:8, 5:6]\boldsymbol{B}[5:6, 1:2] + \boldsymbol{C}[1:8, 1:2]$
- Overall, $\boldsymbol{C}$ can be computed in 6 array multiplications.
  - Need controller to coordinate data movement.

Outline

Neural Networks

Systolic Array

Gemmini

Gemmini

- A full-system, full-stack DNN hardware exploration and evaluation platform.
  - Part of Chipyard and written in Chisel.

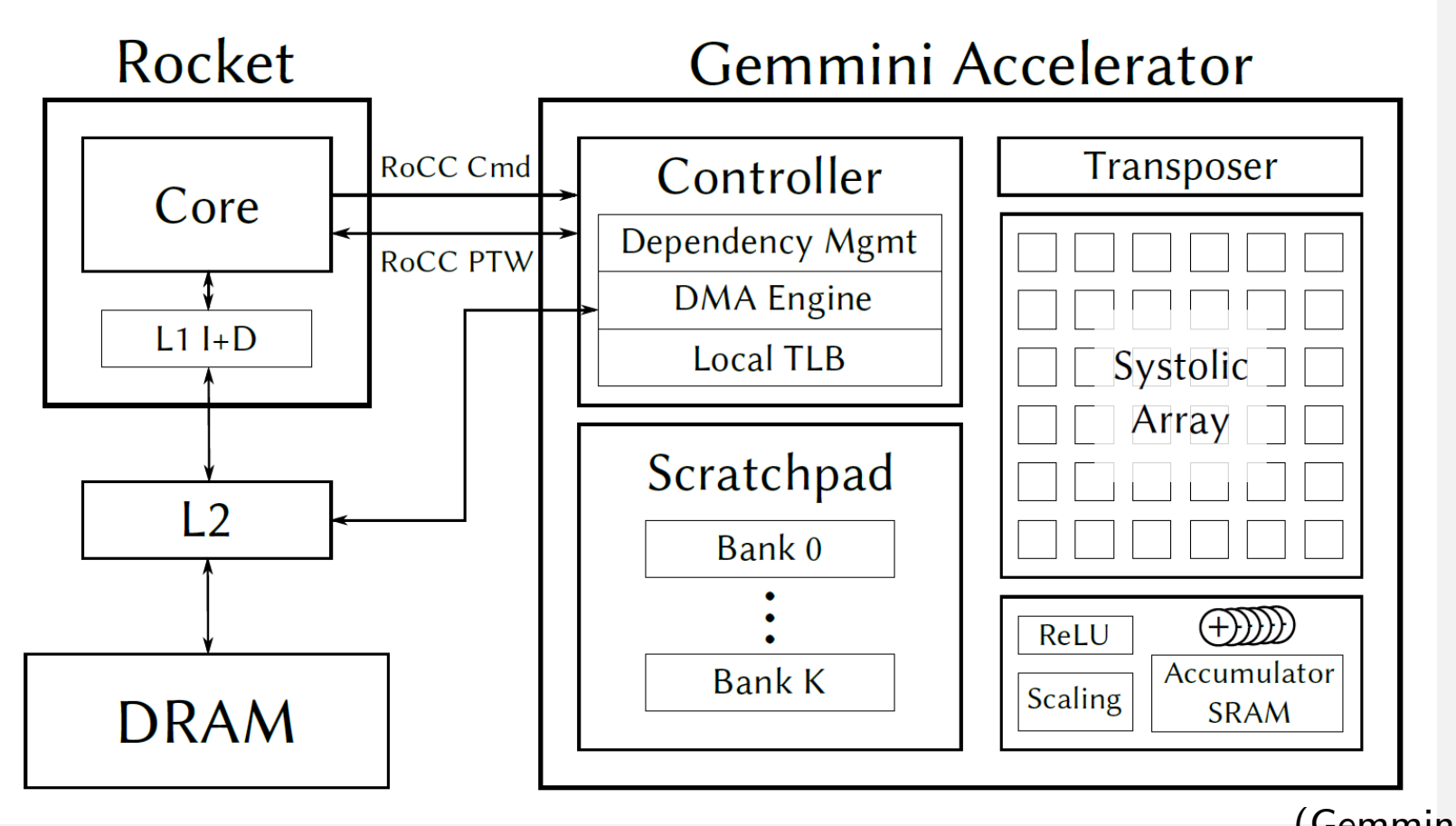

(Gemmini)

Gemmini Features

- A RoCC (RISC-V Custom Coprocessor) accelerator.
  - Connect to a Rocket or BOOM tile through the RoCC port and interfaces.
  - Execute custom RISC-V instructions sent by RISC-V processor.
- Feature a systolic array for efficient matrix multiplication.
  - Support weight-stationary and other dataflows.
  - Addtional accumulator consisting of SRAM storage and adders for weight-stationary dataflow.
- Memory architecture
  - Explicitly managed internal scratchpad.
  - Interface with processor memory via the System Bus, linking directly to the L2 cache.
- Hardware support for activation functions (like ReLU), quantization, and matrix transpose.

Scratchpad and Accumulator SRAM

- The systolic array has a dimension of DIMxDIM.
- Both scratchpad and accumulator SRAM consist of rows.
  - Addressed in the same shared private memory space by rows.
  - Each row contains DIM elements.
  - The elements are of inputType for scratchpad.
  - The elements are of accType for accumulator.
- accType usually has more bits than inputType so that accumulator can add with higher precision.
- Activations and quantizations may be applied when moving data from accumulator SRAM to scratchpad.

Gemmini Instructions

- Provide low-level control over three internal pipeplines
- Load pipeline and store pipeline
  - gemmini_config_ld and gemmini_config_st: let Gemmini know the matrix row size in the main memory.
  - gemmini_mvin and gemmini_mvout: load a DIMxDIM block from L2 to Gemmini, or store a DIMxDIM block to L2.
- Execute pipeline
  - gemmini_config_ex: configurate options for multiplication, e.g. dataflow and activation function.
  - gemmini_preload: move B from Gemmini scratchpad into the systolic array, configurate where C should be stored.
  - gemmini_compute_preloaded: move A into the systolic array, multiply B and write result to C as set by gemmini_preload.
- Work on the project to learn more on high-level Gemmini functions that are easier to use.